0

General
Allmänt
Generalidades

SAAB 9-5

M 1998-

Parts catalogue
Reservdelskatalog
Catalogo de piezas de recambio

Art. No. 170449

MASTER INDEX

0	General	1-A02
2	Engine	1-C02
3A	Electrical systems, instruments	1-F02
4	Transmission	1-I02
5	Brakes	1-K02
6	Front assembly, Steering	1-L02
7	Suspension, Wheels	2-A02
8A	Body, external	2-B02
8B	Body, internal	2-F02
8C	Body, heating and ventilation	2-H02
8D	Tool, Labels	2-I02
9	Accessories	2-J02
10	Numerical register	3-A02

© Saab Automobile AB 1996

CAC97 GB/SE
Dec. 96

0	General Allmänt Generalidades
2	Engine Motor Motor
3 A B	Electrical system, instruments Elektriskt system, instrument Sistema elétrico, instrumentos
4	Transmission Kraftöverföring Transmisión
5	Brakes Bromsar Frenos
6	Front assembly, steering Framvagn, styrinrättning Tren delantero, dirección
7	Suspension, wheels Fjädringssystem, hjul Suspensión, ruedas
8 A B C D	Body, external, internal, heat. and ventil., tools, labels Kaross, utv., inv., värme- och vent., verktyg, etiketter Carocería, ext., inf., calefa. y vent.,herramient, etiquetas
9	Accessories Tillbehör Accesorios
10	Numerical register Nummerregister Indice numérico

GENERAL

INTRODUCTION 1-A05
ABBREVIATIONS 1-A06
MODEL IDENTIFICATION 1-A11
CHASSIS NUMBER 1-A12
ENGINE AND GEARBOX NUMBER 1-A14
INSTRUCTIONS 1-A15
COLOUR MARKING SPRING, -STRUT 1-A23
CODE MARKING VIN PLATE 1-A24

ALLMÄNT

INLEDNING 1-A05
FÖRKORTNINGAR 1-A06
MODELLIDENTIFIKATION 1-A11
CHASSINUMMER 1-A12
MOTOR- OCH VÄXELLÅDSNUMMER 1-A14
ANVISNINGAR 1-A15
FÄRGMÄRKNING FJÄDER, -BEN 1-A23
KODMÄRKNING CHASSINUMMERSKYLT 1-A24

GENERALIDADES

INTRODUCCION 1-A05
ABREVIACIONES 1-A08
IDENTIFICACION DEL MODELO 1-A11
NUM. DE CHASIS 1-A12
NUM. DE MOTOR Y CAJA DE CAMBIOS 1-A14
INSTRUCCIONES 1-A15
MARCACIÓN DE COLOR RESORTE, BRAZO- 1-A23
MARCACION DE CODIGO DE NUMERO DE CHASIS 1-A24

MASTER INDEX

0	General	1-A02
2	Engine	1-C02
3A	Electrical systems, instruments	1-F02
4	Transmission	1-I02
5	Brakes	1-K02
6	Front assembly, Steering	1-L02
7	Suspension, Wheels	2-A02
8A	Body, external	2-B02
8B	Body, internal	2-F02
8C	Body, heating and ventilation	2-H02
8D	Tool, Labels	2-I02
9	Accessories	2-J02
10	Numerical register	3-A02

This Parts Catalogue is applicable to the 1998- models of the Saab 9-5.
It will be updated by new microfiches.
When ordering spare parts intended for specific cars, the chassis No. and/or the engine/transmission No. should be quoted. The car model and colour/upholstery code should be quoted when ordering uphlstery.
Parts may be listed in this catalogue that are no longer available from SAAB warehouses, but of which importers or dealers may have stock. These articles are indicated by the term "No Longer Serviced" or **NLS** being included in the notes column. If there is a replacing part no. it is shown after NLS (NLS - use 7519132).

Denna reservdelskatalog för Saab 9-5 omfattar årsmodellerna 1998-.
Den kommer att hållas aktuell genom att nya fiche ges ut.
Vid beställning av reservdelar till viss bil skall alltid chassinummer och/eller motor- eller växl nummer anges. Vid beställning av klädsel skall även bilens typ samt färg- och klädselkod anges.
I denna katalog kan finnas artiklar som inte längre finns tillgängliga från SAAB´s lager men som kan finnas tillgängliga hos importör eller återförsäljare. Dessa artiklar är märkta i anmärkningskolumnen med **NLS** (No Longer Serviced).
Finns ersättande artikel skrivs art.nr. efter NLS (NLS - us 7519132)

Este catálogo de piezas de recambio del Saab 9-5 comprende los modelos de los anos 1998-, y será mantenido al corriente por la publicación de nuevas fichas.
Para encargar piezas destinadas a un coche determinado, hay que indicar siempre el núm. de chasis y/o el de la caja de cambios. Para encargar tapicería, hay , además, que indicar el tipo del coche clave color de la tapicería.
En este catálogo pueden existir artículos no existentes ya en la actualidad en el almacén de SAAB, pero disponibles todavía en algunos casos en las dependencias del importador o concesionario. Estos artículos han sido marcados con **NLS** (No Longer Serviced) en la columna dedicada a las observaciones. En caso de existir un artículo sustitutorio, el número del mismo se escribe inmediatamente después de NLS (NLS - use 7519132).

4-CYL	4 cylinder engine	4-cylindrig motor
6-CYL	6 cylinder engine	6-cylindrig motor
A	Automatic transmission	Automatisk växellåda
ABS	Anti block system	Låsningsfria bromsar
AC	Air Conditioning	Luftkonditionering
ACC	Automatic Climate Control	Automatisk klimatkontroll
AH	Ampere hours	Amper timmar
AIRBAG1	Airbag drivers side	Airbag förarsida
AIRBAG2	Airbag drivers side and passenger side	Airbag förarsida och passagerarsida
AS	Audio system	Audio system
B205	2,0 l engine	2,0 l motor
B205E	2,0 l turbo engine, **low** power out-put	2,0 l turbo motor, **låg** effekt
B235	2,3 l engine	2,3 l motor
B235E	2,3 l turbo engine, **low** power out-put	2,3 l turbo motor, **låg** effekt
B235L	2,3 l turbo engine, **normal** power out-put	2,3 l turbo motor, **normal** effekt
B235R	2,3 l turbo engine, **high** power out-put	2,3 l turbo motor, **hög** effekt
B308E	3,0 l 6-cylinder turbo engine	3,0 l 6-cylindrig turbo motor
BC	Body colour	Kaross färg
CL	Central locking	Centrallås
D	Door	Dörr
DI	Direct ignition	Direkt tändning
DM	Decimeter	Decimeter

MASTER INDEX

0	**General**	**1-A02**
2	**Engine**	**1-C02**
3A	**Electrical systems, instruments**	**1-F02**
4	**Transmission**	**1-I02**
5	**Brakes**	**1-K02**
6	**Front assembly, Steering**	**1-L02**
7	**Suspension, Wheels**	**2-A02**
8A	**Body, external**	**2-B02**
8B	**Body, internal**	**2-F02**
8C	**Body, heating and ventilation**	**2-H02**
8D	**Tool, Labels**	**2-I02**
9	**Accessories**	**2-J02**
10	**Numerical register**	**3-A02**

EAS	Electrically adjustable seat	Elmanövrerad stol
EGR	Exhaust Gas Recirculation	Avgasrecirkulation
ELCD	Evaporative Loss Control Device	Slutet bränslesytem
EM	Electrical mirrors	Elmanövrerade backspeglar
ETS	Electronic Throttle System	Elektroniskt styrd trottel
EW	Electrical window regulators	Elmanövrerade fönsterhissar
I	Fuel injection	Motor med bränsleinsprutning
IAC	Idle speed control	Tomgångsreglering
KW	Kilo Watt	Kilo Watt
L	Length	Längd
LH	Left hand	Vänster
LHD	Left hand drive	Vänsterstyrd
M	Manual transmission	Manuell växellåda
MM	Millimetre	Millimeter
R	Reverse	Backväxel
RH	Right hand	Höger
RHD	Right hand drive	Högerstyrd
RWW	Rear window wiper	Bakrutetorkare
SAI	Secondary air injection	Sekundärluft
SR	Sun roof	Sollucka
SRA	Headlamp cleaning system	Strålkastarrengöringsanläggning
TCS	Traction Control System for M	Anti spinn system för M
X	Quantity as required	Antal efter behov

4-CYL	4 cilindros motor
6-CYL	6 cilindros motor
A	Caja de cambios automatico
ABS	Frenos antibloqueo
AC	Acondiciona miento de aire
ACC	Contol automatico de clima
AH	Horas amperios
AIRBAG1	Airbag lado del conductor
AIRBAG2	Airbag lado del conductor, lado del pasajero
AS	Audio system
B205	Motor de 2,0 litros
B205E	Motor de 2,0 litros con turbo, **portencia baja**
B235	Motor de 2,3 litros
B235E	Motor de 2,3 litros con turbo, **potencia baja**
B235L	Motor de 2,0 litros con turbo, **potencia normal**
B235R	Motor de 2,0 litros con turbo, **potencia alta**
B308I	3,0 l 6 cilindros motor
BC	Clave color coche
CL	Cerradura
D	Puerta
DI	Encendido directo
DM	Decímetro

MASTER INDEX

0	**General**	**1-A02**
2	**Engine**	**1-C02**
3A	**Electrical systems, instruments**	**1-F02**
4	**Transmission**	**1-I02**
5	**Brakes**	**1-K02**
6	**Front assembly, Steering**	**1-L02**
7	**Suspension, Wheels**	**2-A02**
8A	**Body, external**	**2-B02**
8B	**Body, internal**	**2-F02**
8C	**Body, heating and ventilation**	**2-H02**
8D	**Tool, Labels**	**2-I02**
9	**Accessories**	**2-J02**
10	**Numerical register**	**3-A02**

EAS	Asientos maniobra eléctrica
EGR	Recirculation de los gase de escape
ELCD	Sistema de combustible cerrado
EM	Espejos retrovisores elétricos
ETS	Sistema electrónico de aceleración
EW	Levantacristales eléctricos
I	Motor de inyeccion
IAC	Regulacion de ralenti
KW	Kilowattio
L	Longitud
LH	Lado izquierdo
LHD	Tracción a la izquierda
M	Caja de cambios manual
MM	Millimetros
R	Marcha atras
RH	Lado derecho
RHD	Volante a la derecha
RWW	Limpiaparabrisas post
SAI	Aire secundario
SR	Techo corredizo
SRA	Instalación de limpiafaros
TCS	Sistema de control de tracción
X	Cantidad segun necesidad

AR	Argentina	Argentina	Argentina
AU	Australia	Australien	Australia
BE	Belgium	Belgien	Bélgica
BR	Brazil	Brasilien	Brasil
CA	Canada	Canada	Canadá
CH	Switzerland	Schweiz	Suiza
CN	China	Kina	China
CY	Cyprus	Cypern	Chipre
DK	Denmark	Danmark	Dinamarca
DE	Germany	Tyskland	Alemania
EU	Europe	Europa	Europa
FE	Far East	Fjärran Östern	Extremo Oriente
FI	Finland	Finland	Finlandia
FR	France	Frankrike	Francia
GB	Great Britain	England	Gran Bretana
GR	Greece	Grekland	Grecia
IL	Israel	Israel	Israel
IT	Italy	Italien	Italia
JP	Japan	Japan	Japón
KR	Korea	Korea	Corea
LA	Latin America	Latinamerika	Latinoamérica
LB	Lebanon	Libanon	Libano
ME	Middle East	Mellersta Östern	Próximo Oriente
MT	Malta	Malta	Malta
NO	Norway	Norge	Noruega
PA	Pacific	Stilla-havsområdet	Zona del Pacífico
PR	Puerto Rico	Puerto Rico	Puerto Rico
SE	Sweden	Sverige	Suecia
SG	Singapore	Singapore	Singapur
TR	Turkey	Turkiet	Turquía
TW	Taiwan	Taiwan	Taiwan
UC	USA-California	USA-Kalifornien	EE.UU. Californi.
UF	USA-Federal	USA-Federalt	EE.UU., Federal
US	USA	USA	EE.UU
ZN	New Zeeland	Nya Zeeland	Nueva Zelanda

MASTER INDEX

0	**General**	**1-A02**
2	**Engine**	**1-C02**
3A	**Electrical systems, instruments**	**1-F02**
4	**Transmission**	**1-I02**
5	**Brakes**	**1-K02**
6	**Front assembly, Steering**	**1-L02**
7	**Suspension, Wheels**	**2-A02**
8A	**Body, external**	**2-B02**
8B	**Body, internal**	**2-F02**
8C	**Body, heating and ventilation**	**2-H02**
8D	**Tool, Labels**	**2-I02**
9	**Accessories**	**2-J02**
10	**Numerical register**	**3-A02**

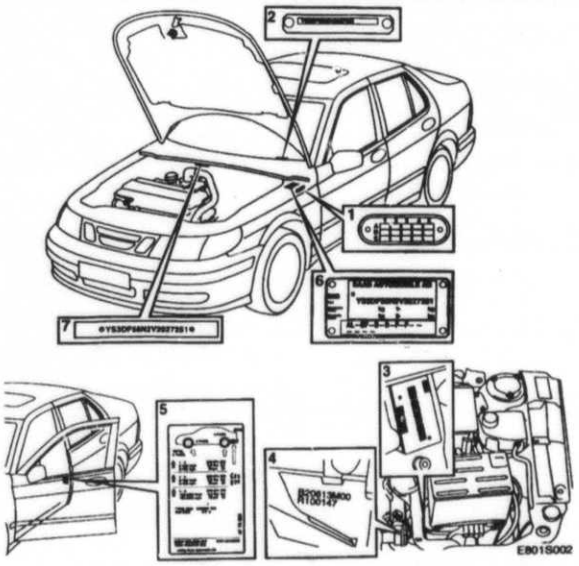

Nameplates and labels

1 Nameplate for modifications (for recalls and the like)
2 Chassis number inside windscreen
3 Gearbox/transmission number
4 Engine number
5 Label for colour codes (upholstery and body) and tyre pressure
6 Chassis number
7 Chassis number (stamped in car body)

Skyltar och etiketter

1 Skylt för modifierinsåtgärder (kampanjskylt)
2 Chassinummer innanför vindruta
3 Växellådsnummer
4 Motornummer
5 Etikett för färgkoder (klädsel och kaross) samt däcktryck
6 Chassinummer
7 Chassinummer (stansat i karossen)

Letreros y etiquetas

1 Letrero de marcasión para las medidas de modificación (letrero de medidas realizadas)
2 Número de chassis en el interior del parabrisas
3 Número de caja de cambios
4 Número de motor
5 Etiqueta para los códigos de colores (tapizado y carroceria), así como presión de los neumáticos
6 Número de chasis
7 Número de chasis, grabado en carroceria

Vehicle Identification Number, VIN (chassis number)

YS3 E K 4 5 E X W 1 000001

Manufacturer Tillverkare Fabricante	Saab Automobile AB	YS3
Product line Produktline Producto	E= Saab 9-5	E
Series Modellserie Serie	A -Z = internal use only	K
Body type Karosstyp Carrocería	4 = 4D	4
Gear box Växellåda Cambio	5 = 5-speed, manual 8 = 4-speed, automatic	5
Engine type Motortyp Motor	C = B205E E = B235E L = B235L G = B235R Z = B308E	E
Check number Kontrollsiffra Cifra de control	0 - 9 or X	X
Model year Årsmodell Modelo de ano	W = 1998 X = 1999 Y = 2000	W
Assembly plant Tillverkningsort Lugar de Montaje	3 = Trollhättan, Sweden, 9-5	1
Serial number Tillverkningsnummer Número de serie	000001-	000001

MASTER INDEX

0	General	1-A02
2	Engine	1-C02
3A	Electrical systems, instruments	1-F02
4	Transmission	1-I02
5	Brakes	1-K02
6	Front assembly, Steering	1-L02
7	Suspension, Wheels	2-A02
8A	Body, external	2-B02
8B	Body, internal	2-F02
8C	Body, heating and ventilation	2-H02
8D	Tool, Labels	2-I02
9	Accessories	2-J02
10	Numerical register	3-A02

B 20 5 E E M 00 W 000001

Gasoline engine Bensinmotor Motor de gasolina	
Swept volume Slagvolym Cilindrada	20 = 1,985 dm3 23 = 2,290 dm3 30 = 2,962 dm3
Cylinder block and head Cylinderblock och lock Bloque cilindro y caluta	5 = Twin cam and two balan. shafts 8 = 6-cyl
Design Utförande Ejecución	E = Turbo charged, low power L = Turbo charged, normal power R = Turbo charged, high power
Product line Produktlinje Producto	
Gearbox adaption Växellådsanpassning Adaptión a caja de cambios	A = Automatic M = Manual
Variant Variant Variante	
Model year Årsmodell Modelo de ano	W = 1998 X = 1999 Y = 2000
Serial number Tillverkningsnummer Número de serie	000001-

MASTER INDEX

0	General	1-A02
2	Engine	1-C02
3A	Electrical systems, instruments	1-F02
4	Transmission	1-I02
5	Brakes	1-K02
6	Front assembly, Steering	1-L02
7	Suspension, Wheels	2-A02
8A	Body, external	2-B02
8B	Body, internal	2-F02
8C	Body, heating and ventilation	2-H02
8D	Tool, Labels	2-I02
9	Accessories	2-J02
10	Numerical register	3-A02

Microfiche layouts

Each mircofiche card has a heading which provides information on:

SAAB 9000 ①	M 90- Ed 6 March 9 ②	3 El. syst instr. A02 4 Transmission J02 ③	④ Art No 170001 GB/SE	2/4 ⑤

1. Car model!
2. Model years included on the microfiche. Edition and date.
3. Catalogue groups included on the microfiche.
4. Microfiche part number and language variant.
5. Microfiche card number.

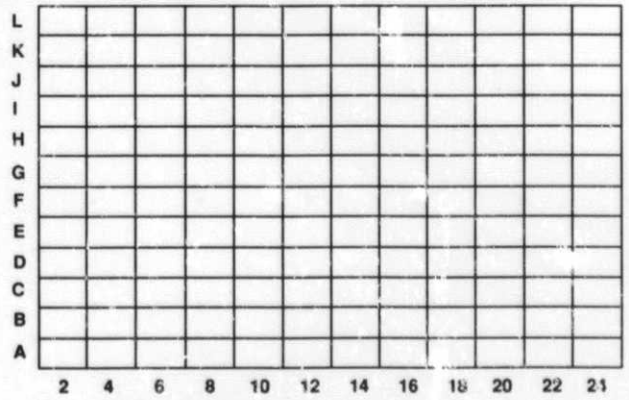

The microfiche card contains 12x12 boxes with illustration and text pages.
Each horizontal line has a letter combination and each vertical column has a digit combination.
Each box is thus given an alpha-numeric coordinate.

Microfichens uppläggning

Varje microfichekort har ett rubrikfält som ger information om:

1. Bilmodell
2. Årsmodeller som microfichen innehåller. Utgåva och datum.
3. Kataloggrupper som finns på kortet.
4. Microfichens artikelnummer och språkvariant.
5. Microfichekortets nummer.

Microfichekortet innehåller 12x12 rutor med bild och textsidor.
Varje horisontell rad har en bokstavsbeteckning och varje vertikal rad en sifferbeteckning.
Varje ruta får på detta sätt en koordinatbeteckning bokstav-siffra.

Disposición de la microficha

Cada tarjeta de microficha cuenta con un encabezamiento que proporciona la siguiente información:

SAAB 9000 ①	M 90- Ed 6 March 9 ②	3 El. syst instr. A02 4 Transmission J02 ③	④ Art No 170001 GB/SE	2/4 ⑤

1. Modelo del automóvil.
2. Años de modelos contenidos en la microficha. Edición y fecha.
3. Grupos de catálogo incluídos en la microficha.
4. Número de artículo y variante de idioma de la microficha.
5. Número de tarjeta de la microficha.

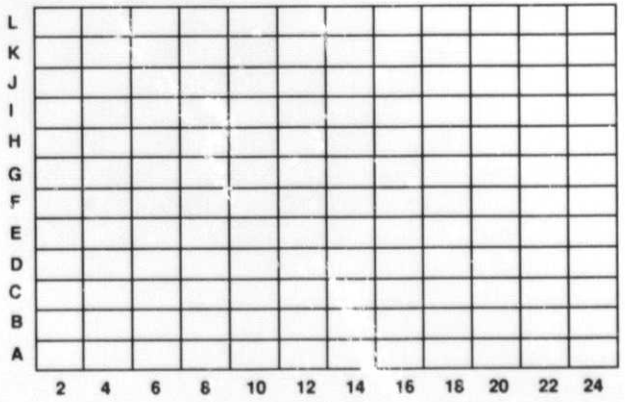

Cada tarjeta contiene 12x12 casillas con páginas de figuras y de texto.
Cada línea horizontal cuenta con una denominación alfabética y cada columna verticale con una numérica.
Cada casilla obtiene de esta manera una coordenada alfa-numérica.

MASTER INDEX

0	General	1-A02
2	Engine	1-C02
3A	Electrical systems, instruments	1-F02
4	Transmission	1-I02
5	Brakes	1-K02
6	Front assembly, Steering	1-L02
7	Suspension, Wheels	2-A02
8A	Body, external	2-B02
8B	Body, internal	2-F02
8C	Body, heating and ventilation	2-H02
8D	Tool, Labels	2-I02
9	Accessories	2-J02
10	Numerical register	3-A02

Illustration page
Each text section has an iliustration page. The illustration page is repeated as long as the text section in question is continued.

A complete unit is marked with a ring around the item number.

A kit can be indicated through the item number poiting to several parts.

A kit can also be indicated through the item number being repeated several times.

Bildsida
Varje textsida har en bildsida. Bildsidan uppredas så länge resp. textavsnitt varar.

Komplett enhet markeras med en ring runt positionsnumret.

En sats kan visas genom att positionsnumret pekar på flera delar.

En sats kan också visas genom att positionsnumret upprepas flera gånger.

Las páginas con figuras
A cada sección de texto le corresponde una página con una figura. Esta página se repite hasta que el texto en cuestión haya finalizado.

Cada unidad completa se marca con un círculo alrededor del número de posición.

Un juego puede ser indicado con el número de posición señalando hacia las distintas piezas.

Un juego puede también ser indicado repitiendo varias veces el número de posición.

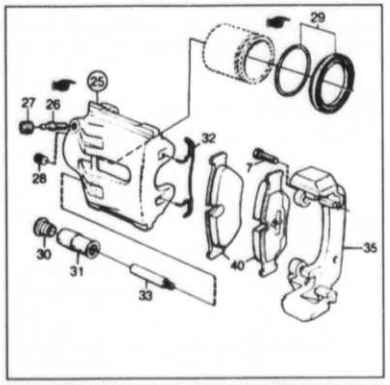

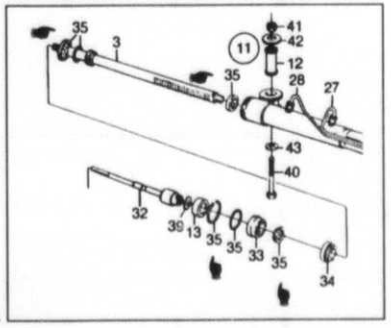

Deviations for certain markets or alternative designs are sometimes indicated in a box.

Avvikelser för vissa marknader eller alternativa utföranden visas ibland i ruta.

Las posibles distintas ejecuciones para algunos mercados, o diseños alternativos, son mostrados a veces en recuadros en una casilla.

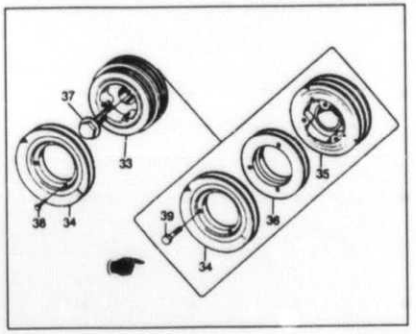

Adjecent parts are indicated on certain illustrations by means of dotted lines or with a rhomb and a note on the text page indicates where you can find the part.

På vissa bilder tecknas *närliggande artiklar* in med prickad linje eller med en romb och en not på textsidan visar var du kan finna artikeln.

Las piezas adyacentes han sido dibujadas en algunas ilustraciones con líneas punteadas o con un rombo, indicando una nota en la página de texto donde puede encontrarse la pieza.

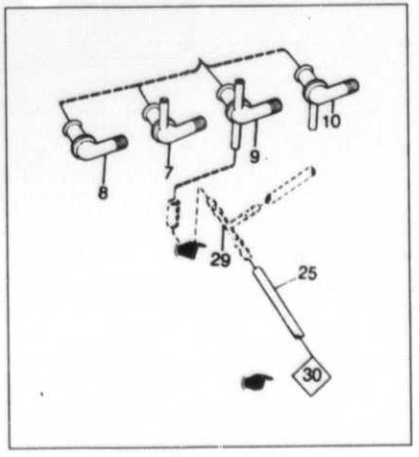

MASTER INDEX

0	General	1-A02
2	Engine	1-C02
3A	Electrical systems, instruments	1-F02
4	Transmission	1-I02
5	Brakes	1-K02
6	Front assembly, Steering	1-L02
7	Suspension, Wheels	2-A02
8A	Body, external	2-B02
8B	Body, internal	2-F02
8C	Body, heating and ventilation	2-H02
8D	Tool, Labels	2-I02
9	Accessories	2-J02
10	Numerical register	3-A02

Text page
Las páginas con texto

Text sida

① **3-C18**

Steering device ② ***Hydraulic pump*** ③

Styrinrättning ***Hydraulpump***

0300	Pos	Part No/Art nr	S	Notes/Anmärkningar	Qty/ Antal	Description	Benämning	S L
0010	1	91 01 585		1990	1	Hydraulic pump	Hydraulpump	3
0020	1	41 06 704		1991-	1	Hydraulic pump	Hydraulpump	3
0030	2	89 42 575			1	Hose	Slang	4
0040	3	89 37 500		14)	2	,O-ring	,O-ring	3
0050	3	41 04 048		15)	2	,O-ring	,O-ring	3

④ ⑤ ⑥ ⑦ ⑧

SAAB spare parts original reservdelar — SAAB 900 M90- — 1991-03 — F2842 — 06-017

1. Microfiche coordinate for the retrievel system, 3-C18 where 3 is the serial number of the microfiche card, C is the microfiche line and 18 is the microfiche column.
2. Subgroup titel in English and Swedish.
3. Section title in English and Swedish.
4. Car model and model years included in the microfiche card.
5. Date (for internal use).
6. Illustration number (for internal use).
7. Main group.
8. Page number within main group.

1. Fichekoordinat för söksystemet, 3-C18 där 3 är fichekortets löpnummer, C är horisontell ficherad och 18 vertikal ficherad.
2. Undergruppstitel på engelska och svenska.
3. Avsnittstitel på engelska och svenska.
4. Bilmodell och årsmodeller som fichekortet täcker.
5. Datum (för internt bruk).
6. Illustrations nummer (för internt bruk).
7. Huvudgrupp.
8. Sidnummer inom huvudgruppen.

1. Coordenada de la microficha para el sistema de búsqueda, 3-C18 en la que 3 es el número de serie de la tarjeta, C es la línea de la microficha y 18 la columna de la misma.
2. Titulo del subgrupo en inglés y sueco.
3. Titulo de la sección en inglés y sueco.
4. Modelos y años de automóviles incluidos en la tarjeta.
5. Fecha (para uso interno).
6. Número de la figura (para uso interno).
7. Groupo principal.
8. Número de página dentro del grupo principal.

① ② ③ ④ ⑤ ⑥ ⑦

0300	Pos	Part No/Art nr	S	Notes/Anmärkningar	Qty/ Antal	Description	Benämning	S L
0010	1	91 01 585		1990	1	Hydraulic pump	Hydraulpump	3
0020	1	41 06 704		1991-	1	Hydraulic pump	Hydraulpump	3
0030	2	89 42 575			1	Hose	Slang	4
0040	3	89 37 500		14)	2	,O-ring	,O-ring	3
0050	3	41 04 048		15)	2	,O-ring	,O-ring	3

1. Item numbers for the part illustrated on the illustration page. Note that the item can be repeated.
   The item is specified in most cases with digits but digit + letter combinations can also occur.
2. Part numbers. A dot to the left of the part number indicates that the number has been added since the preceding edition.
3. An "S" in this column indicates that the part is included in a kit.
4. Comments column. Limitations and restrictions of various kinds are indicated here.
   To permit part numbers which have expired to be identified, the old numbers is written in parentheses.
5. Quantity column.
6. Names in English and Swedish. A dot in front of the name indicates that the part is included in the immediately superior article. For example: item 3 is included in item 2 and accompanies item 2 when item 2 is purchased.
7. Stock keeping level.

1. Positionsnummer på den illustrerade artikeln på bildsidan. Observera att position kan upprepas.
   Positionen anges i de flesta fall med siffror men även siffra + bokstav kan förekomma.
2. Artikelnummer. En punkt till vänster om artikelnumret visar att numret tillkommit sedan föregående utgåva.
3. Ett "S" i kolumnen markerar att artikeln ingår i en sats.
4. Anmärkningskolumn, här anges begränsningar och restriktioner av olika slag.
   För att kunna identifiera utgångna artikelnummer skrivs det gamla numret ut inom parentes.
5. Antalskolumn.
6. Benämning på engelska och svenska. Punktmarkering framför benämningen anger att artikeln ingår i närmast överordnad artikel. Ex: pos 3 ingår i pos 2 och medföljer vid köp av pos 2.
7. Lagerhållningsnivå.

1. Números de posición de la pieza presentada en la página con figura. Observar que esta pieza puede aparecer varias veces.
   La posición se indica en la mayoría de los casos con cifras aunque también pueden aparecer combinaciones alfanuméricas.
2. Números de artículo. Un punto a la izquierda del número de artículo indica que este número ha sido añadido después de la edición precedente.
3. Una "S" en la columna indica que el artículo forma parte de un juego.

4. Columna para observaciones. En esta se indican las distintas limitaciones y restricciones.
   Para poder identificar un número de artículo suprimido, los números antiguos aparecen entre paréntesis.
5. Columna de cantidad.
6. Denominaciones en inglés y sueco. La marcación punteada delante de la denominación indica que el artículo forma parte del artículo inmediatamente superior. Por ejemplo: el art. 3 forma parte del art. 2 y es incluido al comprar el art. 2.
7. Nivel de almacenamiento.

MASTER INDEX

0	General	1-A02
2	Engine	1-C02
3A	Electrical systems, instruments	1-F02
4	Transmission	1-I02
5	Brakes	1-K02
6	Front assembly, Steering	1-L02
7	Suspension, Wheels	2-A02
8A	Body, external	2-B02
8B	Body, internal	2-F02
8C	Body, heating and ventilation	2-H02
8D	Tool, Labels	2-I02
9	Accessories	2-J02
10	Numerical register	3-A02

Master and group indexes

The catalogue is divided into 12 main groups. The master index which is located on the top righthand corner on each microfiche box, indicates the coordinate at which each main group begins.

Master- och gruppindex

Katalogen är indelad i 12 huvudgrupper. Masterindex, som finns i övre höger hörn på varje ficheruta, anger på vilken koordinat varje huvudgrupp börjar.

Indices principal y de groupo

El catálogo se divide en 12 grupos principales. El índice principal, situado en la esquina superior derecha de cada recuadro de la microficha, indica la coordenada de comienzo de cada grupo principal.

MASTER INDEX

0	General	1-A02
2	Engine	1-B02
3	Electrical system, Instruments	2-A02
4	Transmission	2-J02
5	Brakes	3-A02
6	Front assembly, Steering	3-C02
7	Suspension, Wheels	3-E02
8A	Body, external	3-F02
8B	Body, internal	4-A02
8C	Body, heating and ventilation	4-G02
9	Tools, Labels	4-I02
10	Numerical register	4-J02

The main groups are subdivided into subgroups. The group index indicates the coordinate at which the subgroups begin.

Huvudgrupperna är indelade i undergrupper. Gruppindex anger på vilken koordinat undergrupperna börjar.

Los grupos principales están divididos en subgrupos. El índice de grupo indica la coordenada de comienzo de los distintos subgrupos.

2 GROUP INDEX

Engine body	1-B10
Lubrication system	1-C16
Fuel system	1-D02
Inlet and exhaust system	1-D24
Cooling system	1-F18
Engine control	1-G18
Supercharging system	1-G20
Kits	1-H02

Numerical register
Registro numérico

Nummerregister

4-K23 *Numerical register* *Nummerregister*

Part No Art nr	Gr Gr	Page Sida	Grid Koord	Part No Art nr	Gr Gr	Page Sida	Grid Koord	Part No Art nr	Gr Gr	Page Sida	Grid Koord	Part No Art nr	Gr Gr	Page Sida	Grid Koord
98 33 385	08A	089	3-H18	98 41 958	03	055	2-C08	98 67 896	08B	071	4-C24	98 81 665	08B	077	4-D08
98 33 476	08B	093	4-D22	98 43 608	08B	113	4-E18	98 67 896	08B	075	4-D04	98 81 806	08B	117	4-E22
98 33 484	08B	093	4-D22	98 47 377	08A	085	3-H18	98 68 977	08B	069	4-C12	98 81 913	08A	111	3-I16
98 33 492	08B	093	4-D22	98 47 385	08A	085	3-H18	98 68 977	08B	073	4-D02	98 81 921	08A	111	3-I16
98 33 500	08B	093	4-D22	98 48 169	08B	127	4-F08	98 68 985	08B	059	4-C12	98 82 051	08B	079	4-D08

On the last microfiche card there is a numerical register with coordinate reference to the page where the part number is located.
En la última tarjeta de la microficha exista un registro numérico que mediante coordenadas indica la página donde aparece el número de artículo.

En sista fichekortet i katalogen finns ett nummerregister med koordinathänvisning till den sida som artikelnumret finns på.

New parts
Artículos nuevos

Nya artiklar

4-K24 *New parts* *Nya artiklar*

Part No Art nr	Gr Gr	Page Sida	Grid Koord	Part No Art nr	Gr Gr	Page Sida	Grid Koord	Part No Art nr	Gr Gr	Page Sida	Grid Koord	Part No Art nr	Gr Gr	Page Sida	Grid Koord
40 69 829	03	117	2-E22	41 75 923	03	063	2-C06								
40 69 829	03	145	2-G02	41 75 949	03	085	2-D14								
40 84 935	08B	013	4-A14	41 95 954	09	005	4-I06								
40 84 943	08B	011	4-A12	42 83 198	06	017	3-C18								
40 84 950	08B	011	4-A12	43 50 427	08C	009	4-G10								

In the end of the numerical register there is a register for additional parts since the preceding edition.
Al final del registro numérico existe un registro sobre los artículos aparecidos desde la edición precedente.

I slutet av nummerregistret finns ett register på nytillkomna artiklar sedan föregående utgåva.

Deleted parts
Artículos suprimidos

Utgångna artiklar

4-L02 *Deleted parts* *Utgångna artiklar*

Part No Art nr	Gr Gr	Page Sida	Grid Koord	Part No Art nr	Gr Gr	Page Sida	Grid Koord	Part No Art nr	Gr Gr	Page Sida	Grid Koord	Part No Art nr	Gr Gr	Page Sida	Grid Koord
69 52 717															
75 87 298															
82 43 990															
82 44 006															
84 86 318															

Last in the numerical register there is a register for parts that has been deleted since the preceding edition.
Al final del registro numérico existe en registro de los artículos suprimidos desde la edición precedente.

Sist i nummerregistret finns ett register på artiklar som utgått sedan föregående utgåva.

MASTER INDEX

0	General	1-A02
2	Engine	1-C02
3A	Electrical systems, instruments	1-F02
4	Transmission	1-I02
5	Brakes	1-K02
6	Front assembly, Steering	1-L02
7	Suspension, Wheels	2-A02
8A	Body, external	2-B02
8B	Body, internal	2-F02
8C	Body, heating and ventilation	2-H02
8D	Tool, Labels	2-I02
9	Accessories	2-J02
10	Numerical register	3-A02

Colour marking spring and spring strut
Färgmärkning fjäder och fjäderben
Marcación de color resorte y brazo amuelle

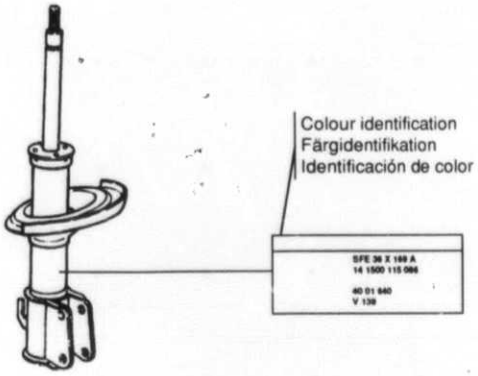

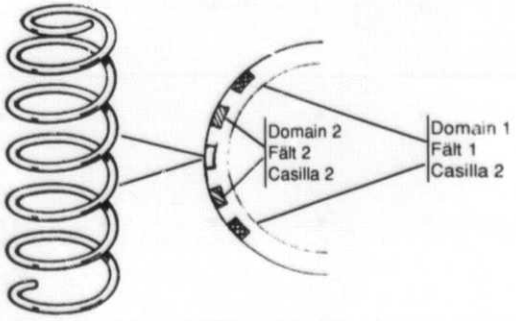

Codes marked on the VIN plate
Kodmärkning på chassinummerskylt
Marcacion de codigo en el letrero de numero de chasis

With effect from M97 the codes for certain spare parts have been marked on the VIN plate.
Från M97 har vissa reservdelar kodmärkts på chassinummerskylten.
Algunas piezas de recambio seran marcadas a partir de M97 con un codigo en el letrero de numero de chasis.

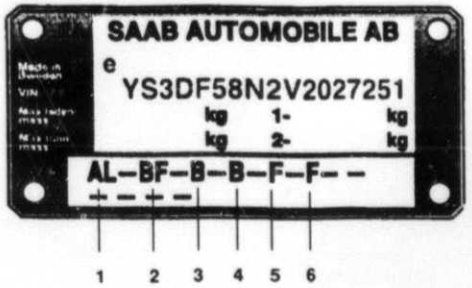

Pos 1	Spring front	Fjäder fram
Pos 2	Spring rear	Fjäder bak
Pos 3	Anti-roll bar front	Krängningshämmare fram
Pos 4	Anti-roll bar rear	Krängningshämmare bak
Pos 5	Spring strut/insert front	Fjäderben/insats fram
Pos 6	Shock absorber rear	Stötdämpare bak

Pos 1	Resorte delantera
Pos 2	Resorte posteriore
Pos 3	Estabilizador delantera
Pos 4	Estabilizador posteriore
Pos 5	Brazo armotiguador/juego delantera
Pos 6	Armotiguador posteriore

In regard to such parts, the remarks area will show **CODE=A**, for instance

För artiklar som är kodmärkta står det i anmärkningsfältet **CODE=A** t.ex.

En el campo destinado a las abservaciones de los articulos con marcacion de codigo aparecera, p. ej., **CODE=A**

MASTER INDEX

0	General	1-A02
2	Engine	1-C02
3A	Electrical systems, instruments	1-F02
4	Transmission	1-I02
5	Brakes	1-K02
6	Front assembly, Steering	1-L02
7	Suspension, Wheels	2-A02
8A	Body, external	2-B02
8B	Body, internal	2-F02
8C	Body, heating and ventilation	2-H02
8D	Tool, Labels	2-I02
9	Accessories	2-J02
10	Numerical register	3-A02

1-C02

2

Engine
Motor
Motor

TABLE OF CONTENTS

Engine suspension		
Engine suspension	2 : 5	1-C06
Engine body 4-cyl		
Cylinder head, 4-cyl	2 : 7	1-C08
Valve cover, 4-cyl	2 : 9	1-C10
Cylinder block, 4-cyl	2 : 11	1-C12
Short engine	2 : 13	1-C14
Belt tensioner, 4-cyl	2 : 15	1-C16
Transmission, 4-cyl	2 : 17	1-C18
Transmission balancer shafts, 4-cyl	2 : 19	1-C20
Crankshaft, connecting rod, piston, flywheel, 4-cyl	2 : 21	1-C22
Lubrication system		
Oil sump, oil pump, oil filter, 4-cyl	2 : 23	1-C24
Crank case ventilation, 4-cyl	2 : 25	1-D02
Fuel system		
Air cleaner, 4-cyl	2 : 27	1-D04
Fuel tank	2 : 29	1-D06
Fuel pipe, fuel filter	2 : 31	1-D08
Fuel pump	2 : 33	1-D10
Fuel rail, 4-cyl	2 : 35	1-D12
Engine control module, TRIONIC	2 : 37	1-D14
Evaporative loss control device, (ELCD)	2 : 39	1-D16
Inlet and exhaust system		
Inlet manifold, 4-cyl	2 : 41	1-D18
Throttle body 4-cyl	2 : 43	1-D20
Exhaust manifold, 4-cyl	2 : 45	1-D22
Heated oxygen sensor, 4-cyl.	2 : 47	1-D24
Exhaust system, 4-cyl.	2 : 49	1-E02
Cooling system		
Cooling system, 4-cyl	2 : 51	1-E04
Fan motor	2 : 53	1-E06
Charge cooler	2 : 55	1-E08
Air oil cooler, engine	2 : 57	1-E10
Air oil cooler, automatic transmission	2 : 59	1-E12
Coolant pump, 4-cyl	2 : 61	1-E14
Thermostat, 4-cyl	2 : 63	1-E16
Engine control		
Accelerator control	2 : 65	1-E18
Supercharging system		
Turbocharger	2 : 67	1-E20
Engine bay cover		
Engine bay cover	2 : 69	1-E22
Kits		
Engine	2 : 71	1-E24

MASTER INDEX

0	General	1-A02
2	Engine	1-C02
3A	Electrical systems, instruments	1-F02
4	Transmission	1-I02
5	Brakes	1-K02
6	Front assembly, Steering	1-L02
7	Suspension, Wheels	2-A02
8A	Body, external	2-B02
8B	Body, internal	2-F02
8C	Body, heating and ventilation	2-H02
8D	Tool, Labels	2-I02
9	Accessories	2-J02
10	Numerical register	3-A02

2 GROUP INDEX

Engine suspension	1-C06
Engine body 4-cyl	1-C08
Lubrication system	1-C24
Fuel system	1-D04
Inled and exhaust system	1-D18
Cooling system	1-E04
Engine control	1-E18
Supercharging system	1-E20
Engine bay cover	1-E22
Kits	1-E24

1-C03

INNEHÅLLSFÖRTECKNING

Motorupphängning		
Motorupphängning	2 : 5	1-C06
Motorkropp 4-cyl		
Cylinderhuvud 4-cyl	2 : 7	1-C08
Ventilkåpa 4-cyl	2 : 9	1-C10
Cylinderblock 4-cyl	2 : 11	1-C12
Grundmotor	2 : 13	1-C14
Remspännare 4-cyl	2 : 15	1-C16
Transmission 4-cyl	2 : 17	1-C18
Transmission, balansaxlar, 4-cyl	2 : 19	1-C20
Vevaxel, vevstake, kolv, 4-cyl	2 : 21	1-C22
Motorkropp 6-cyl		
Smörjsystem		
Oljesump, oljepump, oljefilter, 4-cyl	2 : 23	1-C24
Vevhusventilation 4-cyl	2 : 25	1-D02
Bränslesystem		
Luftrenare, 4-cyl	2 : 27	1-D04
Bränsletank	2 : 29	1-D06
Bränsleledning, Bränslefilter	2 : 31	1-D08
Bränslepump	2 : 33	1-D10
Bränslefördelningsrör 4-cyl	2 : 35	1-D12
Styrdon, TRIONIC	2 : 37	1-D14
ELCD	2 : 39	1-D16
Inlopps- och avgassystem		
Inloppsrör 4-cyl	2 : 41	1-D18
Spjällhus 4-cyl	2 : 43	1-D20
Avgassamlare 4-cyl	2 : 45	1-D22
Syresensor, 4-cyl.	2 : 47	1-D24
Avgassystem, 4-cyl.	2 : 49	1-E02
Kylsystem		
Kylsystem 4-cyl	2 : 51	1-E04
Fläktmotor	2 : 53	1-E06
Laddluftkylare	2 : 55	1-E08
Luftoljekylare, motor	2 : 57	1-E10
Luftoljekylare, automatisk växellåda	2 : 59	1-E12
Kylvätskepump 4-cyl.	2 : 61	1-E14
Termostat, 4-cyl	2 : 63	1-E16
Motorreglage		
Gasreglage	2 : 65	1-E18
Överladdningssystem		
Turbokompressor	2 : 67	1-E20
Motorrumsavtäckning		
Motorrumsavtäckning	2 : 69	1-E22
Satser		
Motor	2 : 71	1-E24

1-C04

SUMARIO

Soportes del motor		
Soportes del motor	2 : 5	1-C06
Cuerpo del motor 4 sil		
Caluta 4 sil	2 : 7	1-C08
Cubierta valvula 4 sil	2 : 9	1-C10
Bloque de cilindros 4 sil	2 : 11	1-C12
Motor de base	2 : 13	1-C14
Tensor correa 4 sil	2 : 15	1-C16
Distribucion 4 sil	2 : 17	1-C18
Distribucion, ejes equilibradores 4 sil	2 : 19	1-C20
Ciguenal, bielas, pistones, volante 4 sil	2 : 21	1-C22
Sistema de engrase		
Carter aciete, filter, bomba aceite, 4 sil	2 : 23	1-C24
Vent. carter del ciguenal 4 sil	2 : 25	1-D02
Sistema de combustible		
Filtro aire, 4 sil	2 : 27	1-D04
Disposito de combustible	2 : 29	1-D06
Conducto combustible, filtro combustible	2 : 31	1-D08
Bomba combustible	2 : 33	1-D10
Tubo distrib. combustible, 4 sil	2 : 35	1-D12
Disp. mando, TRIONIC	2 : 37	1-D14
ELCD	2 : 39	1-D16
Sistema de admision y de escape		
Colector de admision, 4 sil	2 : 41	1-D18
Caja mariposa, 4 sil	2 : 43	1-D20
Colector de escape 4 sil	2 : 45	1-D22
Sensor de oxigeno, 4-sil.	2 : 47	1-D24
Sistema de escape, 4-sil.	2 : 49	1-E02
Sistema de refrigeracion		
Sistema de refrigeracion, 4 sil	2 : 51	1-E04
Motor ventilador	2 : 53	1-E06
Radiador d'air d'alimentacion	2 : 55	1-E08
Radiador de aceite a aire, motor	2 : 57	1-E10
Radiador de aceite a aire, caja de cambios automatica	2 : 59	1-E12
Bomba agua, 4 sil	2 : 61	1-E14
Termostato, 4 sil	2 : 63	1-E16
Mandos del motor		
Mando de acelerador	2 : 65	1-E18
Sistema de sobrealimentacion		
Turbocompresor	2 : 67	1-E20
Recubrim. compart. motor		
Recubrim. compart. motor	2 : 69	1-E22
Juegos completos		
Motor	2 : 71	1-E24

MASTER INDEX

0	General	1-A02
2	Engine	1-C02
3A	Electrical systems, instruments	1-F02
4	Transmission	1-I02
5	Brakes	1-K02
6	Front assembly, Steering	1-L02
7	Suspension, Wheels	2-A02
8A	Body, external	2-B02
8B	Body, internal	2-F02
8C	Body, heating and ventilation	2-H02
8D	Tool, Labels	2-I02
9	Accessories	2-J02
10	Numerical register	3-A02

2 GROUP INDEX

Engine suspension	1-C06
Engine body 4-cyl	1-C08
Lubrication system	1-C24
Fuel system	1-D04
Inled and exhaust system	1-D18
Cooling system	1-E04
Engine control	1-E18
Supercharging system	1-E20
Engine bay cover	1-E22
Kits	1-E24

1-C06 Engine suspension / Motorupphängning

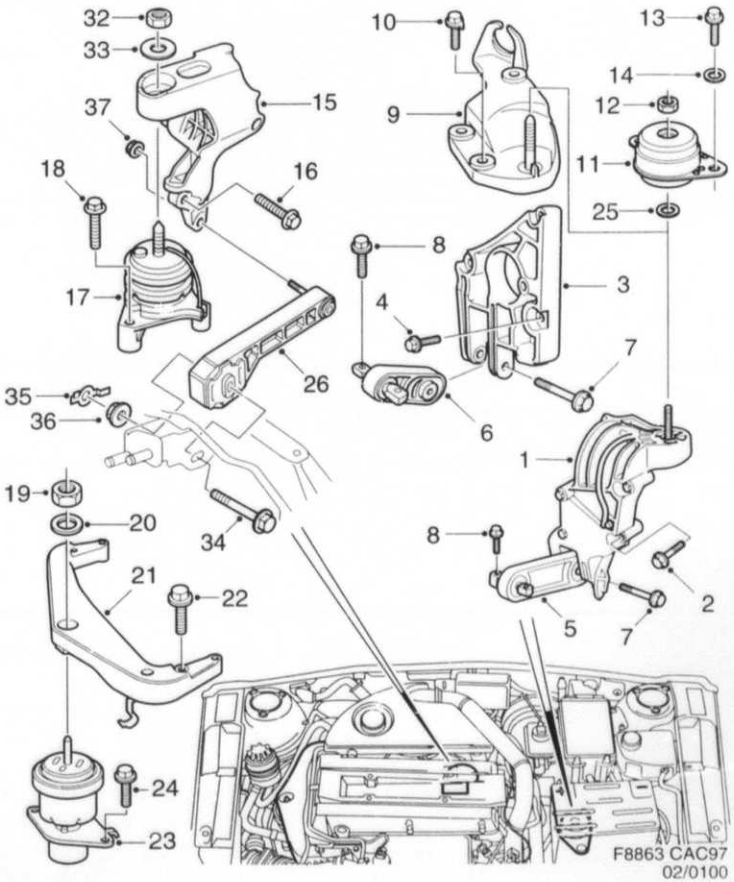

0100	Pos	Part No/Art nr	K S	Notes/Anmärkningar	Qty/ Antal	Description	Benämning	S L
0010	1	48 98 656		M	1	Engine bracket	Motorkonsol	4
0020	2	79 82 572		M	4	Screw	Skruv	5
0030	3	48 98 698		A	1	Engine bracket	Motorkonsol	4
0040	4	79 78 323		A	3	Screw	Skruv	5
0050	5	48 98 086		M	1	Torque rod	Momentstag	5
0060	6	48 98 078		A	1	Torque rod	Momentstag	5
0070	7	79 87 209			2	Screw	Skruv	5
0080	8	79 85 773			2	Screw	Skruv	5
0090	9	48 98 672		A	1	Engine bracket	Motorkonsol	4
0100	10	43 47 456		A	3	Screw	Skruv	5
0110	11	48 98 060			1	Vibration damper	Vibrationsdämpare	3
0120	12	81 51 342			1	Flange nut	Flänsmutter	5
0130	13	79 76 905			2	Screw	Skruv	5
0140	14	46 85 129			2	Washer	Bricka	5
0150	15	48 99 852			1	Engine bracket	Motorkonsol	4
0160	16	79 84 297			3	Screw	Skruv	5
0170	17	46 71 434			1	Vibration damper	Vibrationsdämpare	3
0190	18	79 85 807			3	Screw	Skruv	5
0200	19	79 87 100			1	Flange nut	Flänsmutter	5
0210	20	46 85 913			1	Washer	Bricka	5
0220	21	47 51 657		4-CYL	1	Engine bracket	Motorkonsol	4
0230	22	79 82 564		4-CYL	4	Screw	Skruv	5
0240	23	48 99 787			1	Vibration damper	Vibrationsdämpare	3
0250	24	79 76 905			2	Screw	Skruv	5
0260	25	46 85 756			1	Washer	Bricka	
0270	26	48 99 696		M	1	Torque rod	Momentstag	5
0280	26	48 99 704		A	1	Torque rod	Momentstag	5
0340	32	81 51 243			1	Nut	Mutter	5
0350	33	46 85 129			1	Washer	Bricka	5
0360	34	79 82 572			1	Screw	Skruv	5
0370	35	79 67 979			1	Nut	Mutter	5
0380	36	50 56 106			1	Tab washer	Sakringsbricka	
0390	37	81 51 342			1	Flange nut	Flänsmutter	5

MASTER INDEX

0	General	1-A02
2	Engine	1-C02
3A	Electrical systems, instruments	1-F02
4	Transmission	1-I02
5	Brakes	1-K02
6	Front assembly, Steering	1-L02
7	Suspension, Wheels	2-A02
8A	Body, external	2-B02
8B	Body, internal	2-F02
8C	Body, heating and ventilation	2-H02
8D	Tool, Labels	2-I02
9	Accessories	2-J02
10	Numerical register	3-A02

2 GROUP INDEX

Engine suspension	1-C06
Engine body 4-cyl	1-C08
Lubrication system	1-C24
Fuel system	1-D04
Inled and exhaust system	1-D18
Cooling system	1-E04
Engine control	1-E18
Supercharging system	1-E20
Engine bay cover	1-E22
Kits	1-E24

Engine body

1-C08 Cylinder head 4-cylinder

Motorkropp

Cylinderhuvud 4-cylindrig

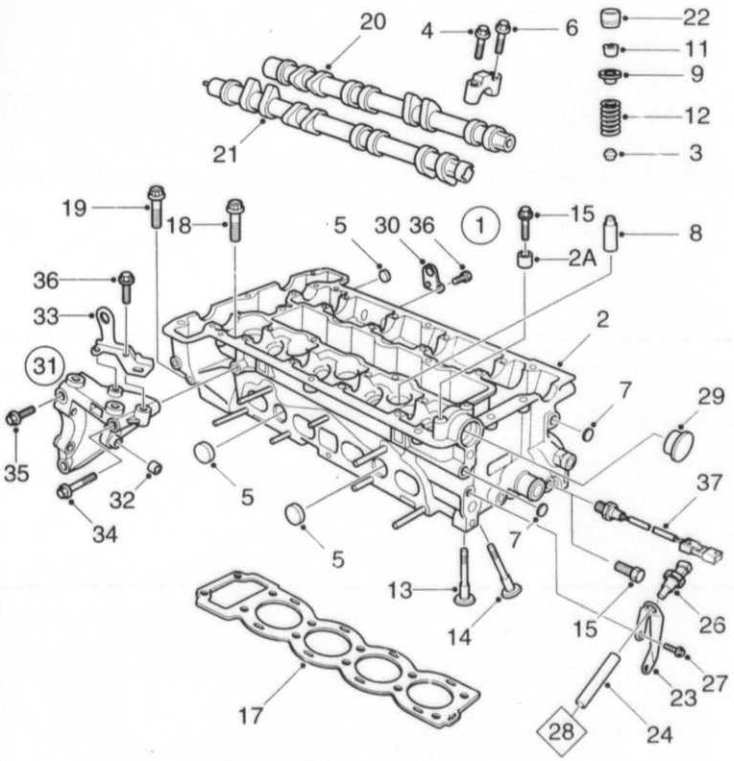

F8864 CAC97
02/0185

0185	Pos	Part No/Art nr	K S	Notes/Anmärkningar	Qty/ Antal	Description	Benämning	S L
0010	1	91 86 941		7)	1	Cylinder head	Cylinderhuvud	5
0020	2	91 86 933			1	.Cylinder head	.Cylinderhuvud	5
0030	2A	75 04 566			2	..Guide sleeve	..Styrhylsa	
0040	3	91 70 861			16	..Seal	..Tatning	3
0050	4	75 85 847			8	..Screw	..Skruv	5
0060	5	75 88 320			5	..Sealing washer	..Tatningsbricka	3
0070	6	40 87 805			12	..Screw	..Skruv	5
0080	7	81 23 143			3	..Plug	..Plugg	3
0090	8	91 85 620			16	..Valve guide	..Ventilstyrning	4
0100	9	91 70 796			16	..Washer	..Bricka	4
0110	11	91 70 812			32	..Valve cone	..Knaster	2
0120	12	91 81 769			16	..Spring	..Fjäder	3
0130	13	91 83 823		24)	8	..Exhaust valve	..Avgasventil	2
0140	14	91 85 851		23)	8	..Inlet valve	..Inloppsventil	3
0150	15	75 04 178			2	..Screw	..Skruv	5
0160	17	91 71 935			1	Gasket	Packning	2
0170	18	91 85 307			10	Screw	Skruv	5
0180	19	79 78 216			2	Hexagon screw	Sexkantsskruv	5
0190	20	91 70 887		23)	1	Camshaft	Kamaxel	5
0200	21	91 70 895		24)	1	Camshaft	Kamaxel	5
0210	22	91 69 566			16	Valve lifter	Ventiltryckare	3
0220	23	91 86 644			1	Bracket	Fäste	
0230	24	91 87 758			1	Hose	Slang	
0250	26	91 71 497			1	Pressure sensor	Tryckgivare	
0260	27	79 78 182			2	Screw	Skruv	5
0270	28			See page 2-041, 1-D18		Inlet manifold	Insugningsrör	
0280	29	91 35 211			1	Sealing plug	Tatningsplugg	5
0290	30	91 74 913			1	Lifting eye	Lyftögla	6
0300	31	47 54 263			1	Bracket	Konsol	5
0310	32	75 93 072			1	.Bushing	.Bussning	5
0320	33	91 77 171			1	Lifting eye	Lyftögla	6
0330	34	*79 78 240*		NLS	1	Screw	Skruv	5
0340	35	79 78 257			2	Screw	Skruv	5
0350	36	79 78 190			4	Screw	Skruv	5
0360	37	91 77 213			1	Intake air temp. sensor	Temperaturgivare	8

7. Also available as exchange unit. Finns även som utbytesenhet.
23. Intake. Inlopp.
24. Exhaust. Avgas.

MASTER INDEX

0	General	1-A02
2	Engine	1-C02
3A	Electrical systems, instruments	1-F02
4	Transmission	1-I02
5	Brakes	1-K02
6	Front assembly, Steering	1-L02
7	Suspension, Wheels	2-A02
8A	Body, external	2-B02
8B	Body, internal	2-F02
8C	Body, heating and ventilation	2-H02
8D	Tool, Labels	2-I02
9	Accessories	2-J02
10	Numerical register	3-A02

2 GROUP INDEX

Engine suspension	1-C06
Engine body 4-cyl	1-C08
Lubrication system	1-C24
Fuel system	1-D04
Inled and exhaust system	1-D18
Cooling system	1-E04
Engine control	1-E18
Supercharging system	1-E20
Engine bay cover	1-E22
Kits	1-E24

1-C10 Valve cover 4-cylinder / Ventilkåpa 4-cylindrig

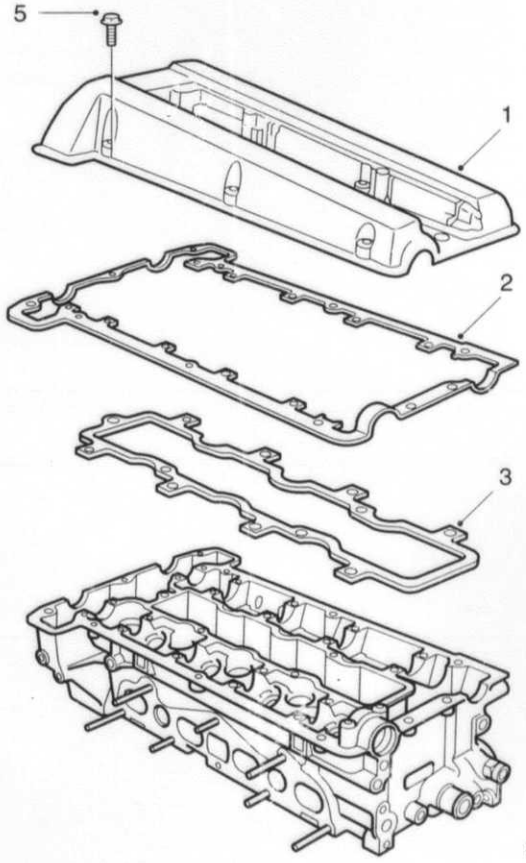

F8865 CAC97
02/0190

0190	Pos	Part No/Art nr	K S	Notes/Anmärkningar	Qty/ Antal	Description	Benämning	S L
0010	1	91 81 397			1	Valve cover	Ventilkåpa	5
0020	2	91 33 026			1	Gasket	Packning	1
0030	3	91 33 034			1	Gasket	Packning	1
0040	5	91 45 756			16	Screw	Skruv	5
0050								
0100		88 22 041		See page 2-071, 1-E24	X	Gasket kit	Packningsats	1

MASTER INDEX

0	General	1-A02
2	Engine	1-C02
3A	Electrical systems, instruments	1-F02
4	Transmission	1-I02
5	Brakes	1-K02
6	Front assembly, Steering	1-L02
7	Suspension, Wheels	2-A02
8A	Body, external	2-B02
8B	Body, internal	2-F02
8C	Body, heating and ventilation	2-H02
8D	Tool, Labels	2-I02
9	Accessories	2-J02
10	Numerical register	3-A02

2 GROUP INDEX

Engine suspension	1-C06
Engine body 4-cyl	1-C08
Lubrication system	1-C24
Fuel system	1-D04
Inled and exhaust system	1-D18
Cooling system	1-E04
Engine control	1-E18
Supercharging system	1-E20
Engine bay cover	1-E22
Kits	1-E24

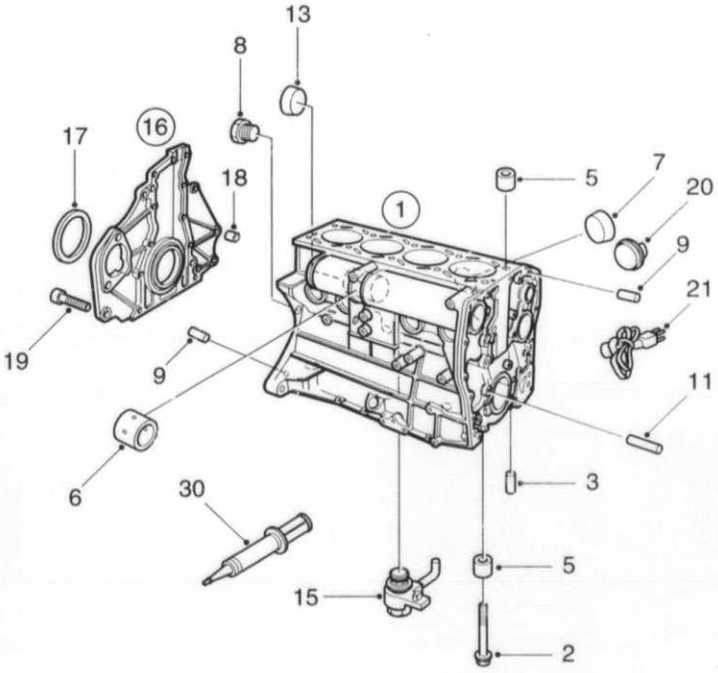

F8866 CAC97
02/0205

0205	Pos	Part No/Art nr	K S	Notes/Anmärkningar	Qty/ Antal	Description	Benämning	S L
0010	1	91 74 285			1	Cylinder block	Cylinderblock	6
0020	2	91 28 687			10	.Screw	.Skruv	5
0025	3	79 49 548			5	.Pin	.Pinne	5
0030	5	83 46 470			7	.Guide	.Styrning	
0040	6	91 72 230			2	.Bushing	.Bussning	5
0050	7	79 85 120			1	.Sealing washer	.Tätningsbricka	3
0060	8	83 48 047			1	.Plug	.Propp	5
0070	9	75 85 052			4	.Guide	.Styrning	5
0080	11	79 50 066			1	.Pin	.Pinne	5
0090	13	81 23 259			2	.Sealing washer	.Tätningsbricka	3
0100	15	91 67 677			4	.Piston cooling jet	.Kolvkylningsmunstycke	5
0110	16	91 74 194			1	Plate	Platta	6
0120	17	91 74 202			1	.Seal	.Tätning	2
0130	18	91 29 800			2	.Guide sleeve	.Styrhylsa	
0140	19	40 87 235			12	Screw	Skruv	5
0150	20	47 25 883		CA	1	Engine heater	Motorvärmare	
0160	21	43 97 311		CA	1	Extension cable	Anslutningskabel	
0200	30	93 21 795		25 ML	X	Flange sealant	Flänstätning	5

MASTER INDEX

0	General	1-A02
2	Engine	1-C02
3A	Electrical systems, instruments	1-F02
4	Transmission	1-I02
5	Brakes	1-K02
6	Front assembly, Steering	1-L02
7	Suspension, Wheels	2-A02
8A	Body, external	2-B02
8B	Body, internal	2-F02
8C	Body, heating and ventilation	2-H02
8D	Tool, Labels	2-I02
9	Accessories	2-J02
10	Numerical register	3-A02

2 GROUP INDEX

Engine suspension	1-C06
Engine body 4-cyl	1-C08
Lubrication system	1-C24
Fuel system	1-D04
Inled and exhaust system	1-D18
Cooling system	1-E04
Engine control	1-E18
Supercharging system	1-E20
Engine bay cover	1-E22
Kits	1-E24

0225	Pos	Part No/Art nr	K S	Notes/Anmärkningar	Qty/ Antal	Description	Benämning	S L
0010								
0020				4-CYL, 6-CYL		.Cylinder block	.Cylinderblock	
0030				4-CYL, 6-CYL		.Crankshaft	.Vevaxel	
0040				4-CYL, 6-CYL		.Connecting rod	.Vevstake	
0050				4-CYL, 6-CYL		.Piston	.Kolv	
0060				4-CYL		.Timing gear casing	.Transmissionskåpa	
0070				4-CYL		.Transmission	.Transmission	
0080				4-CYL		.Coolant pump	.Kylvätskepump	
0090				4-CYL		.Oil pump	.Oljepump	
0100				4-CYL		.Flywheel housing	.Svänghjulskåpa	
0110								
0120								
0130		91 80 688		1998, B205E, M, LHD	X	Engine	Motor	
0140		91 80 696		1998, B205E, A, LHD	X	Engine	Motor	
0150		91 81 462		1998, B205E, M, RHD	X	Engine	Motor	
0160		91 81 488		1998, B205E, A, RHD	X	Engine	Motor	
0170								
0180		91 80 704		1998, B235E, M, LHD	X	Engine	Motor	
0190		91 80 712		1998, B235E, A, LHD	X	Engine	Motor	
0200		91 81 496		1998, B235E, M, RHD	X	Engine	Motor	
0210		91 81 504		1998, B235E, A, RHD	X	Engine	Motor	
0220								
0240								
0250						.Cylinder block	.Cylinderblock	
0260						.Crankshaft	.Vevaxel	
0270						.Connecting rod	.Vevstake	
0280						.Piston	.Kolv	
0290						.Timing gear casing	.Transmissionskåpa	
0300						.Transmission	.Transmission	
0310						.Coolant pump	.Kylvätskepump	
0320						.Flywheel housing	.Svänghjulskåpa	
0330						.Cylinder head	.Cylinderhuvud	
0340						.Valve cover	.Ventilkåpa	
0350						.Sump	.Oljesump	
0360						.Flywheel	.Svänghjul	
0370						.Vibration damper	.Svängningsdämpare	
0380						.Camshaft	.Kamaxel	
0390						.Intake manifold	.Inloppsrör	
0400						.Exhaust manifold	.Avgassamlare	
0410						.Oil filter	.Oljefilter	
0420						.Oil filler pipe	.Oljepåfyllningsrör	
0430						.Crank case ventilation	.Vevhusventilation	
0440						.Thermostat housing	.Termostathus	
0450						.Multiport fuel injection	.Bränsleinsprutning	
0460						.Ignition system	.Tändsystem	
0470						.Clutch	.Koppling	

MASTER INDEX

0	General	1-A02
2	Engine	1-C02
3A	Electrical systems, instruments	1-F02
4	Transmission	1-I02
5	Brakes	1-K02
6	Front assembly, Steering	1-L02
7	Suspension, Wheels	2-A02
8A	Body, external	2-B02
8B	Body, internal	2-F02
8C	Body, heating and ventilation	2-H02
8D	Tool, Labels	2-I02
9	Accessories	2-J02
10	Numerical register	3-A02

2 GROUP INDEX

Engine suspension	1-C06
Engine body 4-cyl	1-C08
Lubrication system	1-C24
Fuel system	1-D04
Inled and exhaust system	1-D18
Cooling system	1-E04
Engine control	1-E18
Supercharging system	1-E20
Engine bay cover	1-E22
Kits	1-E24

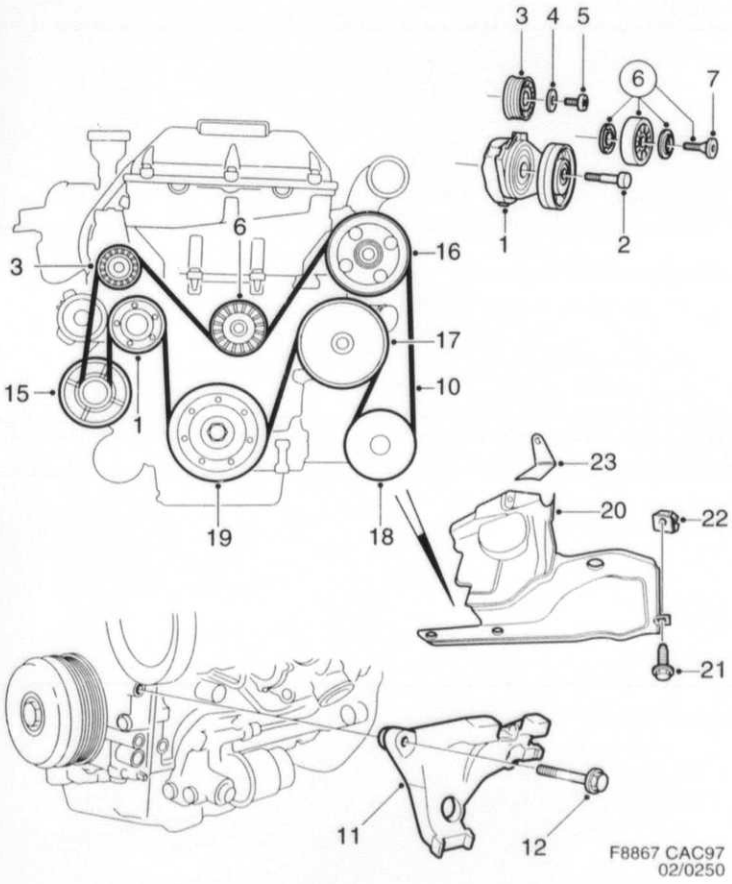

Engine body

1-C16 Belt tensioner 4-cylinder

Motorkropp

Remspännare 4-cylindrig

0250	Pos	Part No/Art nr	K S	Notes/Anmärkningar	Qty/ Antal	Description	Benämning	S L
0010	1	48 98 755			1	Belt tensioner	Remspännare	5
0020	2	49 40 367			1	Screw	Skruv	5
0030	3	43 56 127			1	Idler pulley	Brythjul	3
0040	4	49 61 959			2	Bearing shield	Lagersköld	6
0050	5	80 82 984			1	Screw	Skruv	5
0060	6	47 52 960			1	Tension pulley	Spännrulle	3
0070	7	46 85 525			1	.Screw	.Skruv	5
0080	10	48 96 312			1	Belt	Rem	1
0090	10	48 99 548		AC/ACC	1	Belt	Rem	1
0100	10	47 54 719		8). AC/ACC	1	Belt	Rem	1
0110	11	46 70 717		AC/ACC	1	Bracket	Konsol	5
0120	12	79 78 323		AC/ACC	3	Screw	Skruv	5
0150	15			See page 3A-007, 1-F08		Generator	Generator	
0160	16			See page 6-013, 1-L14		Hydraulic pump	Hydraulpump	
0170	17			See page 2-061, 1-E14		Coolant pump	Kylvätskepump	
0180	18			See page 8C-015, 2-H16		Compressor	Kompressor	
0190	19			See page 2-019, 1-C20		Pulley	Remskiva	
0200	20	48 95 132			1	Belt protector	Remskydd	
0210	21	79 83 000			4	Hexagon screw	Sexkantsskruv	5
0220	22	43 33 704			4	Expanding nut	Expandermutter	3
0230	23	49 54 954			1	Protection	Skydd	

8. For tropical market; ME, LA, AU, HK, SG, TH, CY För tropisk marknad; ME, LA, AU, HK, SG, TH, CY

MASTER INDEX

0	General	1-A02
2	Engine	1-C02
3A	Electrical systems, instruments	1-F02
4	Transmission	1-I02
5	Brakes	1-K02
6	Front assembly, Steering	1-L02
7	Suspension, Wheels	2-A02
8A	Body, external	2-B02
8B	Body, internal	2-F02
8C	Body, heating and ventilation	2-H02
8D	Tool, Labels	2-I02
9	Accessories	2-J02
10	Numerical register	3-A02

2 GROUP INDEX

Engine suspension	1-C06
Engine body 4-cyl	1-C08
Lubrication system	1-C24
Fuel system	1-D04
Inled and exhaust system	1-D18
Cooling system	1-E04
Engine control	1-E18
Supercharging system	1-E20
Engine bay cover	1-E22
Kits	1-E24

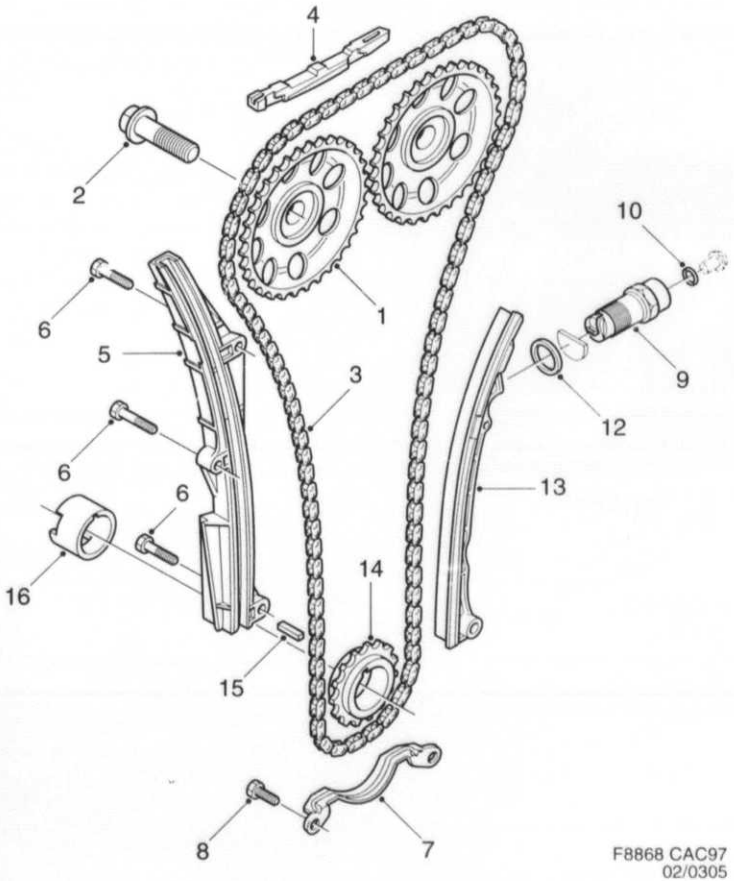

F8868 CAC97
02/0305

0305	Pos	Part No/Art nr	K S	Notes/Anmärkningar	Qty/ Antal	Description	Benämning	S L
0010	1	91 15 205			2	Chain gear	Kedjehjul	5
0020	2	91 07 541			2	Screw	Skruv	5
0030	3	91 31 145			1	Chain	Kedja	3
0040	4	88 59 324			1	Chain control	Kedjestyrning	3
0050	5	91 45 350			1	Chain control	Kedjestyrning	3
0060	6	79 78 141			2	Hexagon screw	Sexkantsskruv	5
0070	7	91 36 532			1	Chain protection	Kedjeskydd	5
0080	8	79 78 091			2	Screw	Skruv	5
0090	9	75 85 086			1	Chain tensioner	Kedjesträckare	3
0100	10	*81 09 571*		NLS – USE 8048670	1	,O-ring	,O-ring	2
0110	12	75 08 690			1	Seal	Tätning	5
0120	13	91 45 376			1	Chain control	Kedjestyrning	3
0130	14	91 15 197			1	Chain gear	Kedjehjul	4
0140	15	91 16 864			1	Key	Kil	5
0150	16			See page 2-019, 1-C20		Companion flange	Medbringare	

MASTER INDEX

0	General	1-A02
2	Engine	1-C02
3A	Electrical systems, instruments	1-F02
4	Transmission	1-I02
5	Brakes	1-K02
6	Front assembly, Steering	1-L02
7	Suspension, Wheels	2-A02
8A	Body, external	2-B02
8B	Body, internal	2-F02
8C	Body, heating and ventilation	2-H02
8D	Tool, Labels	2-I02
9	Accessories	2-J02
10	Numerical register	3-A02

2 GROUP INDEX

Engine suspension	1-C06
Engine body 4-cyl	1-C08
Lubrication system	1-C24
Fuel system	1-D04
Inled and exhaust system	1-D18
Cooling system	1-E04
Engine control	1-E18
Supercharging system	1-E20
Engine bay cover	1-E22
Kits	1-E24

1-C20 Transmission / Transmission
Balance shaft, 4-cyl / Balansaxel, 4-cyl

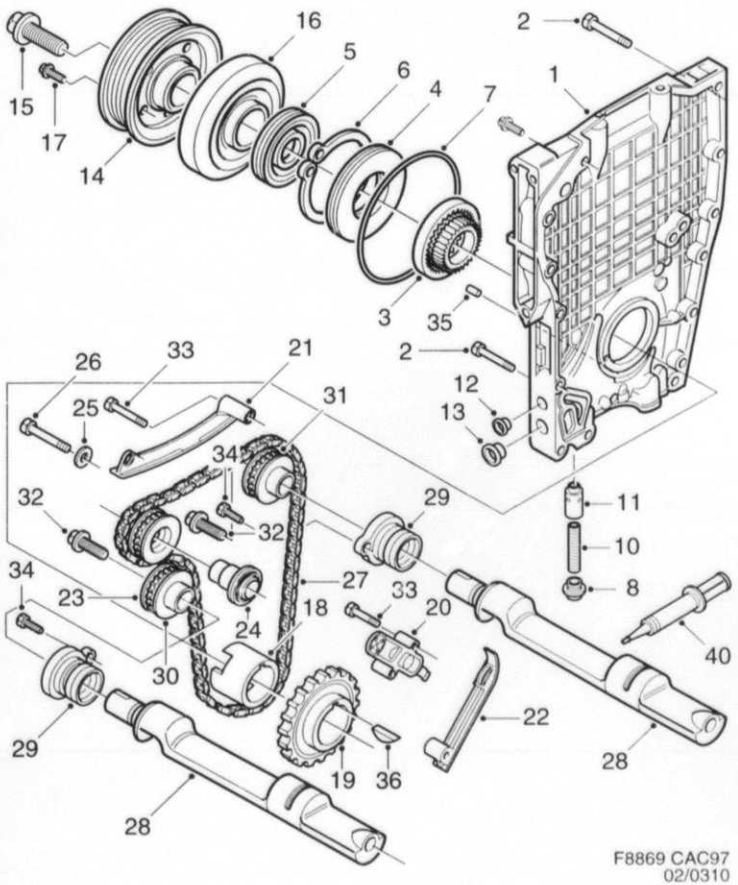

F8869 CAC97
02/0310

0310	Pos	Part No/Art nr	K S	Notes/Anmärkningar	Qty/ Antal	Description	Benämning	S L
0010	1	91 81 991			1	Cover	Kåpa	5
0020	2	79 84 891			15	Screw	Skruv	5
0030	3	88 22 702		See page 2-071, 1-E24	1	Pump kit	Pumpsats	5
0040	4	91 73 501			1	Oil pump housing	Oljepumphus	6
0050	5	91 73 576			1	Seal	Tätning	2
0060	6	91 29 719			1	Lock ring	Låsring	5
0070	7	91 30 600			1	Seal	Tätning	2
0080	8	91 77 973			1	Plug	Propp	5
0090	10	91 82 197			1	Spring	Fjäder	6
0100	11	91 67 784			1	Piston	Kolv	6
0110	12	81 23 168			1	Plug	Plugg	4
0120	13	81 23 192			1	Plug	Plugg	4
0130	14	91 44 874			1	Pulley	Remskiva	4
0140	15	91 16 443			1	Screw	Skruv	5
0150	16	91 44 833			1	Vibration damper	Vibrationsdämpare	
0160	17	80 59 586			6	Screw	Skruv	5
0170	18	91 29 727			1	Companion flange	Medbringare	5
0180	19	91 38 264			1	Chain gear	Kedjehjul	4
0190	20	91 39 130			1	Chain tensioner	Kedjesträckare	3
0200	21	91 45 368			1	Chain control	Kedjestyrning	3
0210	22	91 45 384			1	Chain control	Kedjestyrning	3
0220	23	91 40 658			1	Chain gear	Kedjehjul	4
0230	24	91 45 392			1	Shaft	Axel	5
0240	25	91 30 535			1	Thrust washer	Axialbricka	5
0250	26	79 84 735			1	Screw	Skruv	5
0260	27	74 85 105			1	Chain	Kedja	4
0270	28	91 85 588			2	Balance shaft	Balansaxel	5
0280	29	91 72 255			2	Bearing housing	Lagerhus	5
0290	30	91 78 302			1	Chain gear	Kedjehjul	4
0300	31	91 78 336			1	Chain gear	Kedjehjul	4
0310	32	80 82 968			2	Screw	Skruv	5
0320	33	79 78 141			4	Hexagon screw	Sexkantsskruv	5
0330	34	79 78 109			2	Screw	Skruv	5
0340	35	79 49 548			1	Pin	Pinne	5
0350	36			See page 2-017, 1-C18		Key	Kil	
0360	40	93 21 795		25 ML	X	Flange sealant	Flänstätning	5

MASTER INDEX

0	General	1-A02
2	Engine	1-C02
3A	Electrical systems, instruments	1-F02
4	Transmission	1-I02
5	Brakes	1-K02
6	Front assembly, Steering	1-L02
7	Suspension, Wheels	2-A02
8A	Body, external	2-B02
8B	Body, internal	2-F02
8C	Body, heating and ventilation	2-H02
8D	Tool, Labels	2-I02
9	Accessories	2-J02
10	Numerical register	3-A02

2 GROUP INDEX

Engine suspension	1-C06
Engine body 4-cyl	1-C08
Lubrication system	1-C24
Fuel system	1-D04
Inled and exhaust system	1-D18
Cooling system	1-E04
Engine control	1-E18
Supercharging system	1-E20
Engine bay cover	1-E22
Kits	1-E24

1-C22 Crankshaft, connecting rod, piston, 4-cyl.

Vevaxel, vevstake, kolv, 4-cyl.

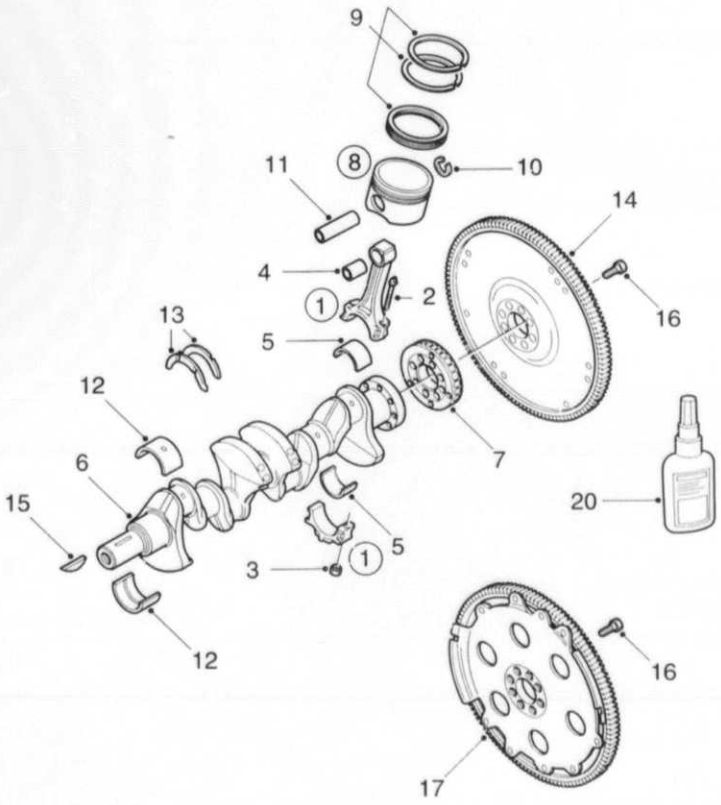

F8870 CAC97
02/0355

0355	Pos	Part No/Art nr	K S	Notes/Anmärkningar	Qty/ Antal	Description	Benämning	S L
0010	1	91 73 782		B205	4	Connecting rod	Vevstake	5
0015	1	91 73 808		B235	4	Connecting rod	Vevstake	5
0020	2	74 80 643			8	.Screw	.Skruv	5
0030	3	74 80 684			8	.Nut	.Mutter	5
0040	4	91 81 827			4	.Bushing	.Bussning	5
0050	5	91 45 459			8	Con.bearing	Vevstakslager	
0060	6	91 39 403		B205	1	Crankshaft	Vevaxel	
0070	6	91 39 460		B235	1	Crankshaft	Vevaxel	
0090	7			See page 3A-013, 1-F14		Aperture disc	Blåndarskiva	
0100	8	91 72 214		B205, CLASS A	4	Piston	Kolv	5
0110	8	91 73 204		B205, CLASS B	4	Piston	Kolv	5
0120	8	91 73 220		21), B205, 0,5 MM	4	Piston	Kolv	5
0130	8	91 73 238		21), B205, 1,0 MM	4	Piston	Kolv	5
0140								
0141	8	91 73 246		B235, CLASS A	4	Piston	Kolv	5
0142	8	91 73 261		B235, CLASS B	4	Piston	Kolv	5
0143	8	91 73 287		21), B235, 0,5 MM	4	Piston	Kolv	5
0144	8	91 73 295		21), B235, 1,0 MM	4	Piston	Kolv	5
0145								
0150	9	91 76 934			1	.Piston ring kit	.Kolvringsats	3
0160	9	91 76 942		21), 0,5 MM	1	.Piston ring kit	.Kolvringsats	3
0170	9	91 76 959		21), 1,0 MM	1	.Piston ring kit	.Kolvringsats	3
0180								
0190	10	88 59 514		B235	8	Lock ring	Låsring	5
0200	11	91 83 831			4	Gudgeon pin	Kolvtapp	5
0210	12	91 45 418			10	Main bearing	Ramlager	5
0220	13	75 88 783			2	Thrust washer	Tryckbricka	4
0250	14	91 72 008		M	1	Flywheel	Svänghjul	5
0260	16	91 31 160			8	Screw	Skruv	5
0270	17	91 71 422		A	1	Companion flange	Medbringare	4

21. Oversize. Överdimension.

MASTER INDEX

0	General	1-A02
2	Engine	1-C02
3A	Electrical systems, instruments	1-F02
4	Transmission	1-I02
5	Brakes	1-K02
6	Front assembly, Steering	1-L02
7	Suspension, Wheels	2-A02
8A	Body, external	2-B02
8B	Body, internal	2-F02
8C	Body, heating and ventilation	2-H02
8D	Tool, Labels	2-I02
9	Accessories	2-J02
10	Numerical register	3-A02

2 GROUP INDEX

Engine suspension	1-C06
Engine body 4-cyl	1-C08
Lubrication system	1-C24
Fuel system	1-D04
Inled and exhaust system	1-D18
Cooling system	1-E04
Engine control	1-E18
Supercharging system	1-E20
Engine bay cover	1-E22
Kits	1-E24

1-C24 Sump, oil filter 4-cylinder

Oljesump, oljefilter 4-cylindrig

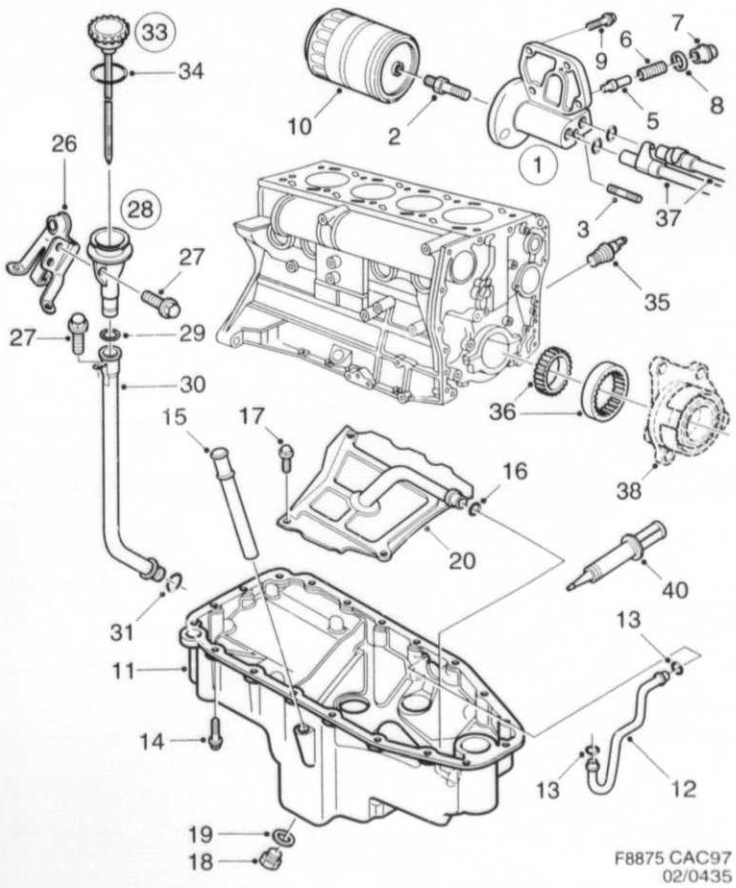

0435	Pos	Part No/Art nr	K S	Notes/Anmärkningar	Qty/ Antal	Description	Beräkning	S L
0010	1	91 79 268			1	Intermediate section	Mellanstycke	6
0020	2	83 48 609			1	.Junction pipe	.Skarvrör	6
0025	3	46 85 368			1	.Stud	.Pinnskruv	5
0030	5	91 81 736			1	.Thermostat	.Termostat	2
0040	6	91 81 744			1	.Spring	.Fjäder	5
0050	7	91 81 934			1	.Plug	.Propp	5
0060	8	91 09 182			1	.Gasket	.Packning	4
0070	9	79 78 216			4	Hexagon screw	Sexkantsskruv	5
0080	10	91 44 445			1	Filter	Filter	1
0090	11	91 73 162			1	Sump	Oljesump	6
0100	12	91 75 696			1	Tube	Rör	4
0110	13	91 37 993			2	O-ring	O-ring	2
0120	14	79 78 208			18	Screw	Skruv	5
0130	15	91 75 662			1	Oil pipe	Oljesugrör	6
0140	16	91 38 009			1	O-ring	O-ring	2
0150	17	79 71 294			4	Screw	Skruv	5
0160	18	91 32 929			1	Plug	Propp	1
0170	19	91 32 937			1	Gasket	Packning	1
0180	20	91 75 266			1	Protection	Skydd	6
0190	26			See page 2-065, 1-E18		Bracket	Konsol	
0200	27	79 78 109			2	Screw	Skruv	5
0210	28	91 79 284			1	Oil-level tube	Oljenivåror	6
0220	29	91 38 108			1	.O-ring	.O-ring	2
0230	30	91 72 271			1	Tube	Rör	6
0240	31	91 47 026			1	O-ring	O-ring	2
0250	33	91 72 305			1	Dipstick	Oljesticka	3
0260	34	93 61 544			1	.Ring-gland	.Packningsring	4
0270	35	91 76 660			1	Oil pressure sensor	Oljetrycksgivare	3
0280	36			See page 2-019, 1-C20		Pump kit	Pumpsats	
0290	37			See page 2-057, 1-E10		Hose	Slang	
0300	38			See page 2-019, 1-C20		Oil pump housing	Oljepumphus	
0310	40	93 21 795		25 ML	X	Flange sealant	Flänstätning	5

MASTER INDEX

0	General	1-A02
2	Engine	1-C02
3A	Electrical systems, instruments	1-F02
4	Transmission	1-I02
5	Brakes	1-K02
6	Front assembly, Steering	1-L02
7	Suspension, Wheels	2-A02
8A	Body, external	2-B02
8B	Body, internal	2-F02
8C	Body, heating and ventilation	2-H02
8D	Tool, Labels	2-I02
9	Accessories	2-J02
10	Numerical register	3-A02

2 GROUP INDEX

Engine suspension	1-C06
Engine body 4-cyl	1-C08
Lubrication system	1-C24
Fuel system	1-D04
Inled and exhaust system	1-D18
Cooling system	1-E04
Engine control	1-E18
Supercharging system	1-E20
Engine bay cover	1-E22
Kits	1-E24

Lubrication system

1-D02 Crank case ventilation 4-cylinder

Smörjsystem

Vevhusventilation 4-cylindrig

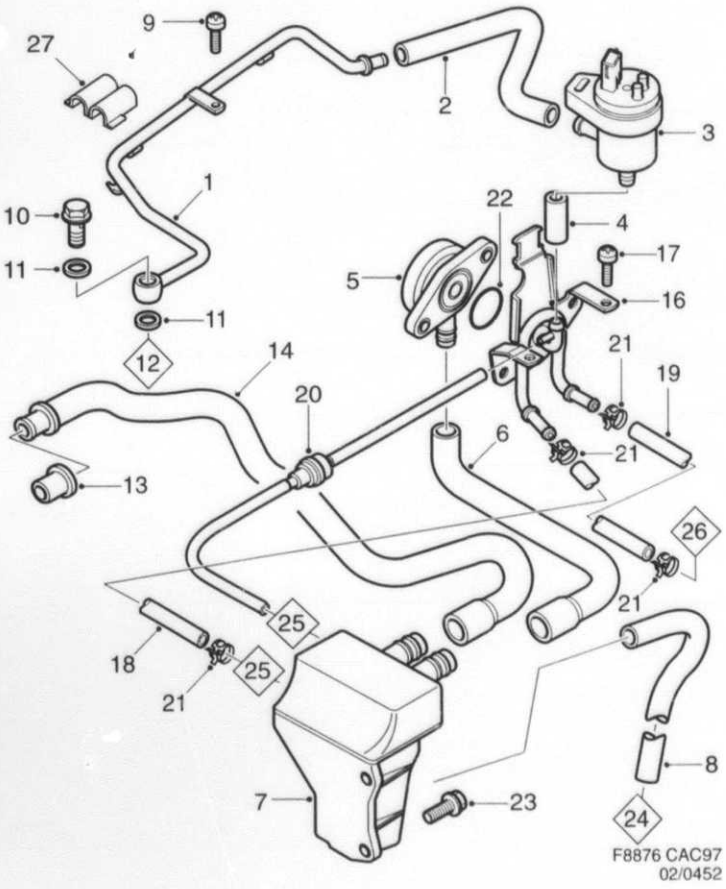

0452	Pos	Part No/Art nr	K S	Notes/Anmärkningar	Qty/ Antal	Description	Benämning	S L
0010	1	91 83 849			1	Tube	Rör	5
0020	2	91 72 099			1	Hose	Slang	4
0030	4	91 74 889			1	Hose	Slang	4
0040	5	91 72 065			1	Valve	Ventil	4
0050	6	91 72 057			1	Hose	Slang	4
0060	7	91 87 790			1	Oil trap	Oljefälla	
0070	8	91 72 115			1	Hose	Slang	4
0080	9	91 45 764			1	Screw	Skruv	5
0090	10	75 83 628			1	Screw	Skruv	5
0100	11	81 24 158			2	Gasket	Packning	2
0110	12			See page 2-067, 1-E20		Pipe	Rör	
0120	13	75 15 190			1	Bushing	Bussning	5
0130	14	91 87 816			1	Hose	Slang	4
0140	16	91 82 155			1	Bracket	Fäste	4
0150	17	79 78 091			4	Screw	Skruv	5
0160	18	91 82 163			1	Hose	Slang	
0170	19	91 82 171			1	Hose	Slang	
0180	20	91 82 486			1	Hose	Slang	4
0190	21	46 20 365			4	Hose clamp	Slangklamma	
0200	22	46 85 749			1	O-ring	O-ring	4
0210	23	79 78 190			2	Screw	Skruv	5
0220	24			See page 2-023, 1-C24		Sump	Oljesump	
0230	25			See page 2-043, 1-D20		Electr. throttle actuator	Spjällhus	
0240	26			See page 2-061, 1-E14		Tube	Rör	
0250	27	46 85 905			1	Clamp	Klämma	6

MASTER INDEX

0	General	1-A02
2	Engine	1-C02
3A	Electrical systems, instruments	1-F02
4	Transmission	1-I02
5	Brakes	1-K02
6	Front assembly, Steering	1-L02
7	Suspension, Wheels	2-A02
8A	Body, external	2-B02
8B	Body, internal	2-F02
8C	Body, heating and ventilation	2-H02
8D	Tool, Labels	2-I02
9	Accessories	2-J02
10	Numerical register	3-A02

2 GROUP INDEX

Engine suspension	1-C06
Engine body 4-cyl	1-C08
Lubrication system	1-C24
Fuel system	1-D04
Inled and exhaust system	1-D18
Cooling system	1-E04
Engine control	1-E18
Supercharging system	1-E20
Engine bay cover	1-E22
Kits	1-E24

1-D04 Air cleaner / Luftrenare

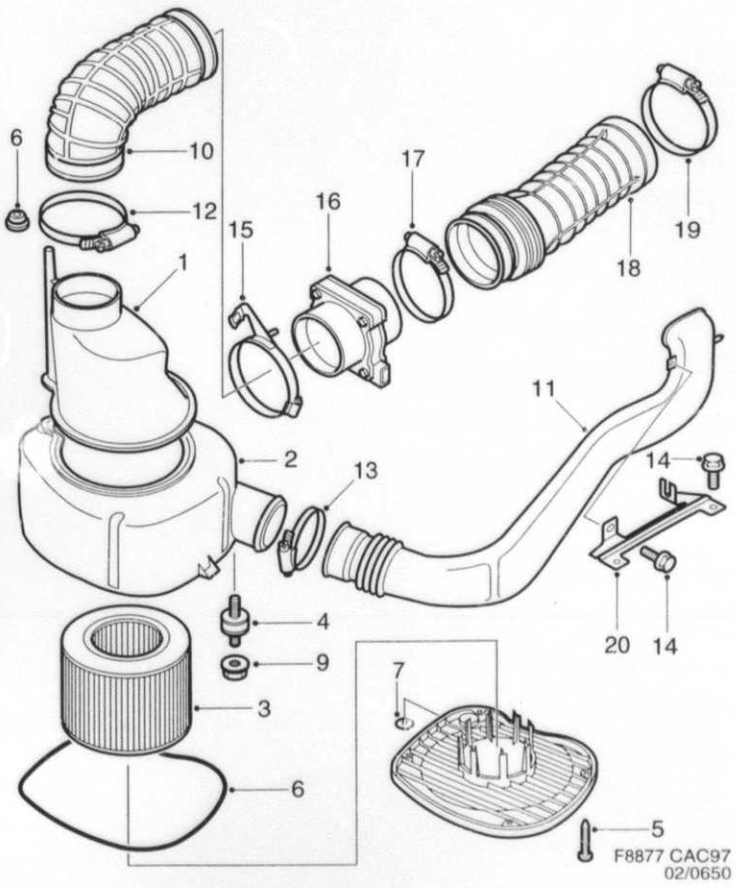

0650	Pos	Part No/Art nr	K S	Notes/Anmärkningar	Qty/ Antal	Description	Benämning	S L
0010	1	45 72 509			1	Air cleaner housing	Luftrenarhus	6
0020	2	45 72 517			1	Cover	Lock	6
0030	3	45 72 491			1	Air filter	Luftfilter	1
0040	4	46 71 863			2	Rubber spacer	Gummidistans	4
0050	5	46 71 871			4	Screw	Skruv	5
0060	6	48 96 569			1	O-ring	O-ring	2
0070	7	48 96 577			1	Diaphragm	Membran	1
0080	8	75 12 593			1	Rubber bushing	Gummibussning	5
0090	9	43 45 138			2	Hexagon nut	Sexkantsmutter	5
0100	10	45 72 566			1	Air hose	Luftslang	5
0110	11	46 70 469			1	Air inlet	Luftintag	5
0120	12	79 70 155			1	Hose clamp	Slangklamma	5
0130	13	79 70 148			1	Hose clamp	Slangklamma	5
0140	14	79 78 661			3	Hexagon screw	Sexkantsskruv	5
0150	15	48 95 017			1	Attachment	Fäste	
0170	16	91 85 091			1	Mass air flow sensor	Luftmassamätare	4
0180	17	79 70 163			1	Hose clamp	Slangklamma	5
0190	18	47 52 085		4-CYL	1	Air hose	Luftslang	5
0210	19	79 70 148			1	Hose clamp	Slangklamma	5
0220	20	46 70 444			1	Bracket	Fäste	5

MASTER INDEX

0	General	1-A02
2	Engine	1-C02
3A	Electrical systems, instruments	1-F02
4	Transmission	1-I02
5	Brakes	1-K02
6	Front assembly, Steering	1-L02
7	Suspension, Wheels	2-A02
8A	Body, external	2-B02
8B	Body, internal	2-F02
8C	Body, heating and ventilation	2-H02
8D	Tool, Labels	2-I02
9	Accessories	2-J02
10	Numerical register	3-A02

2 GROUP INDEX

Engine suspension	1-C06
Engine body 4-cyl	1-C08
Lubrication system	1-C24
Fuel system	1-D04
Exhaust exhaust system	1-D18
Cooling system	1-E04
Engine control	1-E18
Supercharging system	1-E20
Engine bay cover	1-E22
Kits	1-E24

1-D06 Fuel tank / Bränsletank

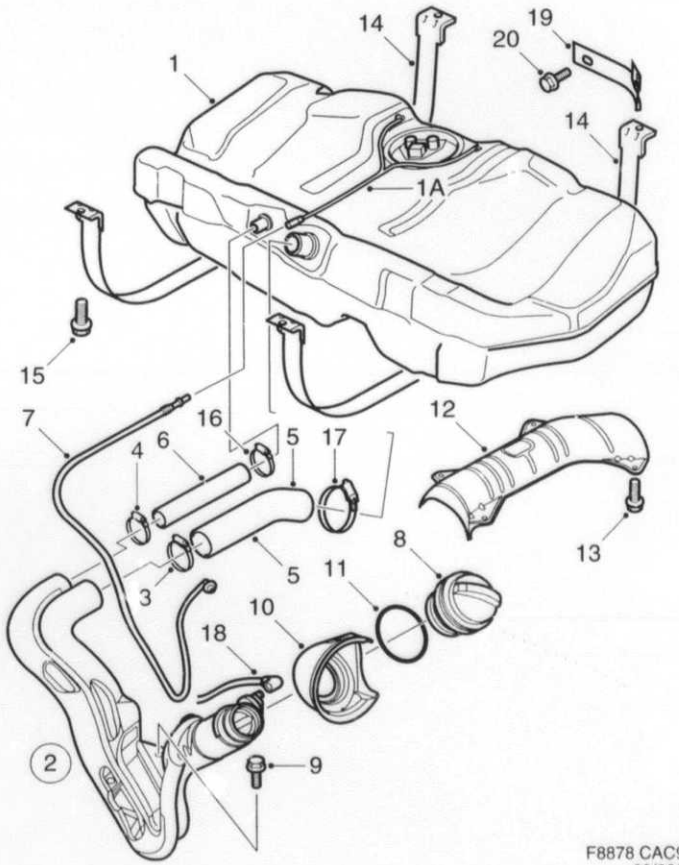

F8878 CAC97
02/0820

0820	Pos	Part No/Art nr	K S	Notes/Anmärkningar	Qty/ Antal	Description	Benämning	S L
0010	1	45 74 026			1	Tank	Tank	8
0030	1A	45 76 757			1	.Hose	.Slang	5
0040	2	45 72 038			1	Filler pipe	Påfyllningsrör	5
0060	3	49 40 029			1	.Hose clamp	.Slangklamma	5
0070	4	49 40 011			1	.Hose clamp	.Slangklamma	5
0080	5	45 74 208			1	.Hose	.Slang	5
0100	6	45 74 216			1	.Hose	.Slang	5
0120	7	45 74 257			1	.Vent hose	.Urluftningsledning	
0130	8	47 27 038			1	Filler cap	Tanklock	8
0140	9	42 26 023			1	Screw	Skruv	5
0150	10	47 26 329			1	Seal	Tätning	
0160	11	45 77 680			1	Ring	Ring	
0170	12	45 74 349			1	Heat shield	Värmesköld	3
0180	13	47 52 168			1	Screw	Skruv	5
0190	14	45 72 087			2	Tensioning band	Spännband	6
0200	15	79 85 773			4	Screw	Skruv	5
0210	16	49 40 011			1	Hose clamp	Slangklamma	5
0220	17	49 40 029			1	Hose clamp	Slangklamma	5
0230	18			See page 2-039, 1-D16		Tube	Rör	
0240	19	48 95 140			1	Bracket	Konsol	
0250	20	79 78 661			1	Hexagon screw	Sexkantsskruv	5

MASTER INDEX

0	General	1-A02
2	Engine	1-C02
3A	Electrical systems, instruments	1-F02
4	Transmission	1-I02
5	Brakes	1-K02
6	Front assembly, Steering	1-L02
7	Suspension, Wheels	2-A02
8A	Body, external	2-B02
8B	Body, internal	2-F02
8C	Body, heating and ventilation	2-H02
8D	Tool, Labels	2-I02
9	Accessories	2-J02
10	Numerical register	3-A02

2 GROUP INDEX

Engine suspension	1-C06
Engine body 4-cyl	1-C08
Lubrication system	1-C24
Fuel system	1-D04
Inled and exhaust system	1-D18
Cooling system	1-E04
Engine control	1-E18
Supercharging system	1-E20
Engine bay cover	1-E22
Kits	1-E24

1-D08 Fuel pipe / Fuel filter

Bränsleledning / Bränslefilter

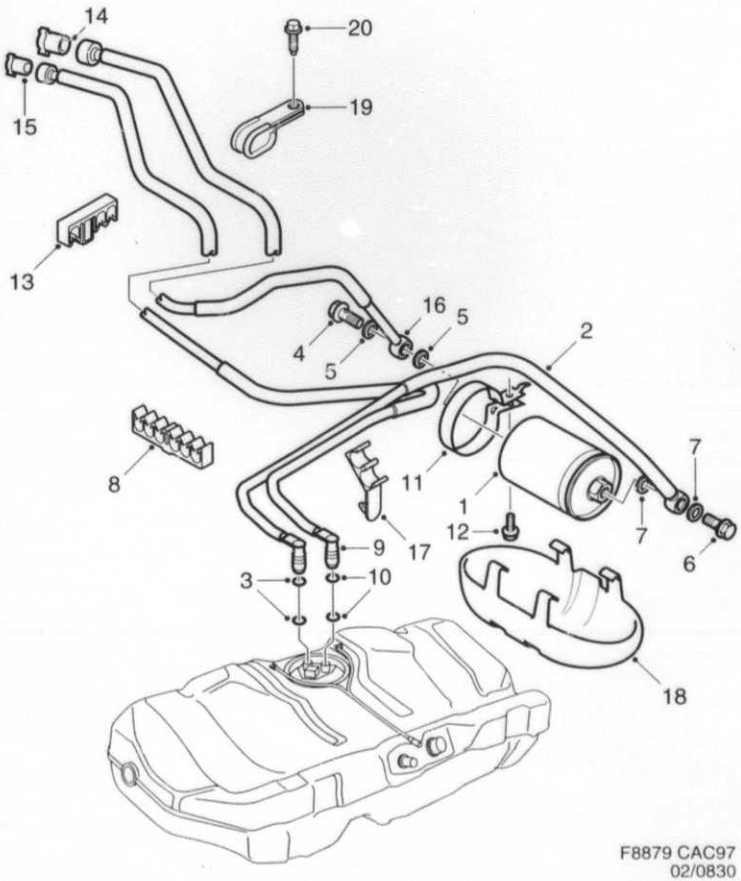

F8879 CAC97
02/0830

0830	Pos	Part No/Art nr	K S	Notes/Anmärkningar	Qty/ Antal	Description	Benämning	S L
0010	1	41 63 853			1	Fuel filter	Bränslefilter	8
0020	2	43 96 065			1	Fuel pipe	Bränsleledning	8
0030	3	79 74 546			2	.O-ring	.O-ring	8
0040	4	43 74 203			1	Banjo bolt	Hålbult	5
0050	5	44 43 883			2	Seal	Tätning	5
0060	6	43 74 211			1	Banjo bolt	Hålbult	5
0070	7	41 61 162			2	Seal	Tätning	5
0080	8	46 71 558			8	Clamp	Klammer	5
0090	9	43 96 057			1	Fuel pipe	Bränsleledning	8
0100	10	79 74 546			2	.O-ring	.O-ring	8
0110	11	45 73 903			1	Tensioning band	Spännband	6
0120	12	79 78 661			1	Hexagon screw	Sexkantsskruv	5
0130	13	42 29 985			1	Bracket	Fäste	5
0140	14	42 29 738			1	Bushing	Bussning	
0150	15	42 29 746			1	Bushing	Bussning	
0160	16	43 96 040			1	Fuel pipe	Bränsleledning	8
0170	17	46 71 699			2	Clamp	Klammer	5
0180	18	40 15 707			1	Protection	Skydd	

MASTER INDEX

0	General	1-A02
2	Engine	1-C02
3A	Electrical systems, instruments	1-F02
4	Transmission	1-I02
5	Brakes	1-KC2
6	Front assembly, Steering	1-L02
7	Suspension, Wheels	2-A02
8A	Body, external	2-B02
8B	Body, internal	2-F02
8C	Body, heating and ventilation	2-H02
8D	Tool, Labels	2-I02
9	Accessories	2-J02
10	Numerical register	3-A02

2 GROUP INDEX

Engine suspension	1-C06
Engine body 4-cyl	1-C08
Lubrication system	1-C24
Fuel system	1-D04
Inlet and exhaust system	1-D18
Cooling system	1-E04
Engine control	1-E18
Supercharging system	1-E20
Engine bay cover	1-E22
Kits	1-E24

1-D10 Fuel pump / Bränslepump

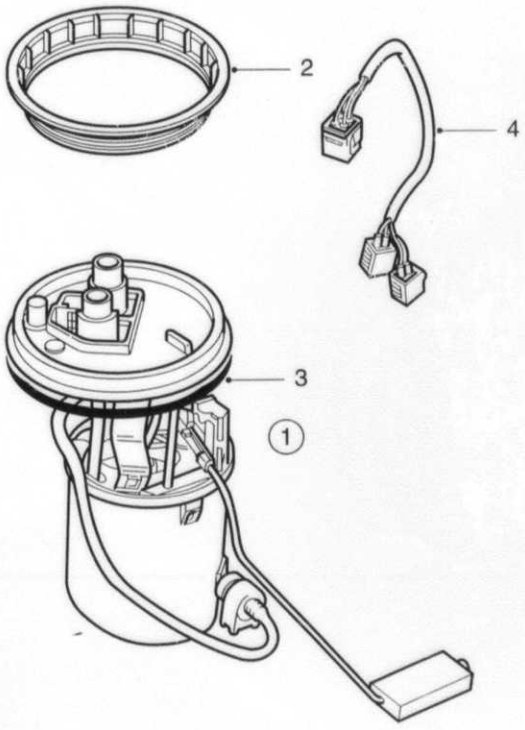

F8880 CAC97
02/0860

0860	Pos	Part No/Art nr	K S	Notes/Anmärkningar	Qty/ Antal	Description	Benämning	S L
0010	1	88 22 694			1	Fuel pump	Bränslepump	8
0020	2	41 56 550			1	.Cover	.Lock	8
0030	3	41 60 511			1	.Seal	.Tätning	8
0040	4	43 93 195			1	.Connection	.Skarv	5

MASTER INDEX

0	General	1-A02
2	Engine	1-C02
3A	Electrical systems, instruments	1-F02
4	Transmission	1-I02
5	Brakes	1-K02
6	Front assembly, Steering	1-L02
7	Suspension, Wheels	2-A02
8A	Body, external	2-B02
8B	Body, internal	2-F02
8C	Body, heating and ventilation	2-H02
8D	Tool, Labels	2-I02
9	Accessories	2-J02
10	Numerical register	3-A02

2 GROUP INDEX

Engine suspension	1-C06
Engine body 4-cyl	1-C08
Lubrication system	1-C24
Fuel system	1-D04
Inled and exhaust system	1-D18
Cooling system	1-E04
Engine control	1-E18
Supercharging system	1-E20
Engine bay cover	1-E22
Kits	1-E24

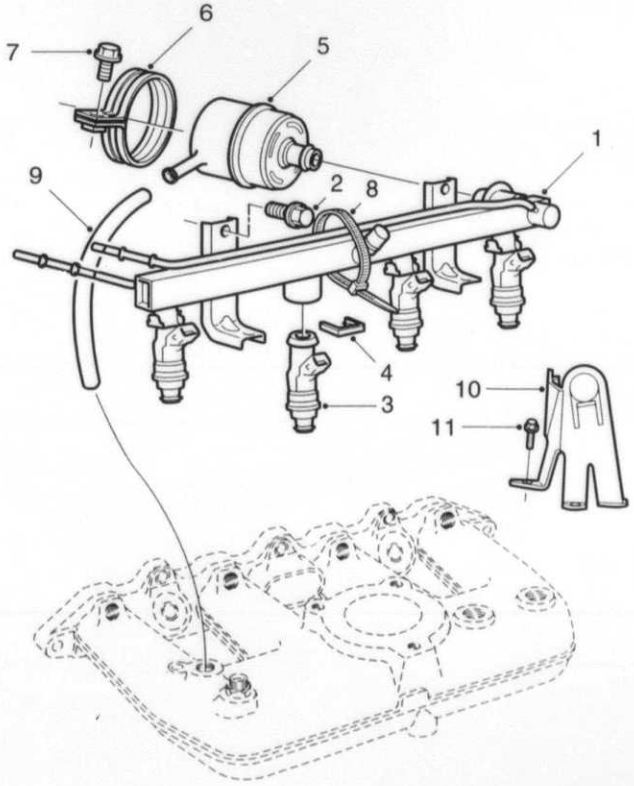

F8881 CAC97
02/0900

0900	Pos	Part No/Art nr	K S	Notes/Anmärkningar	Qty/ Antal	Description	Benämning	S L
0010	1	91 72 362			1	Tube	Rör	
0020	2	79 78 091			2	Screw	Skruv	5
0030	3	91 77 437		B205E	4	Injection valve	Insprutningsventil	
0040	3	91 77 122		B235E	4	Injection valve	Insprutningsventil	
0050	4	91 75 464			4	Clamp	Klammer	5
0060	5	47 70 400			1	Fuel pressure regulator	Bränsletryckregulator	8
0070	6	45 03 819			1	Clamp	Klämma	5
0080	7	*79 78 380*		NLS - USE 8029944, 8059420	1	Screw	Skruv	5
0080								
0090	8	79 71 872			2	Tensioning band	Spännband	5
0100	9	91 36 243			1	Vaccum hose	Vakuumslang	5
0110	10	91 75 035			1	Bracket	Konsol	5
0120	11	79 78 109			3	Screw	Skruv	5

MASTER INDEX

0	General	1-A02
2	Engine	1-C02
3A	Electrical systems, instruments	1-F02
4	Transmission	1-I02
5	Brakes	1-K02
6	Front assembly, Steering	1-L02
7	Suspension, Wheels	2-A02
8A	Body, external	2-B02
8B	Body, internal	2-F02
8C	Body, heating and ventilation	2-H02
8D	Tool, Labels	2-I02
9	Accessories	2-J02
10	Numerical register	3-A02

2 GROUP INDEX

Engine suspension	1-C06
Engine body 4-cyl	1-C08
Lubrication system	1-C24
Fuel system	1-D04
Inled and exhaust system	1-D18
Cooling system	1-E04
Engine control	1-E18
Supercharging system	1-E20
Engine bay cover	1-E22
Kits	1-E24

1-D14 Engine control module TRIONIC / Styrdon TRIONIC

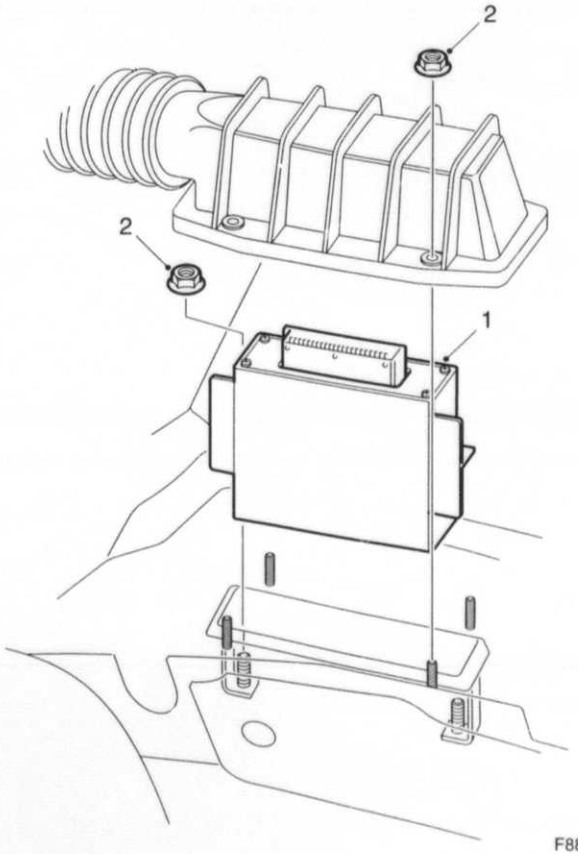

F8882 CAC97
02/0912

0912	Pos	Part No/Art nr	K S	Notes/Anmärkningar	Qty/ Antal	Description	Benämning	S L
0010	1	47 82 215		B235E	1	Electronic unit	Elektronikenhet	
0020	1	47 82 207		B205E	1	Electronic unit	Elektronikenhet	
0050	2	79 77 929			6	Nut	Mutter	5

MASTER INDEX

0	General	1-A02
2	Engine	1-C02
3A	Electrical systems, instruments	1-F02
4	Transmission	1-I02
5	Brakes	1-K02
6	Front assembly, Steering	1-L02
7	Suspension, Wheels	2-A02
8A	Body, external	2-B02
8B	Body, internal	2-F02
8C	Body, heating and ventilation	2-H02
8D	Tool, Labels	2-I02
9	Accessories	2-J02
10	Numerical register	3-A02

2 GROUP INDEX

Engine suspension	1-C06
Engine body 4-cyl	1-C08
Lubrication system	1-C24
Fuel system	1-D04
Inled and exhaust system	1-D18
Cooling system	1-E04
Engine control	1-E18
Supercharging system	1-E20
Engine bay cover	1-E22
Kits	1-E24

1-D16

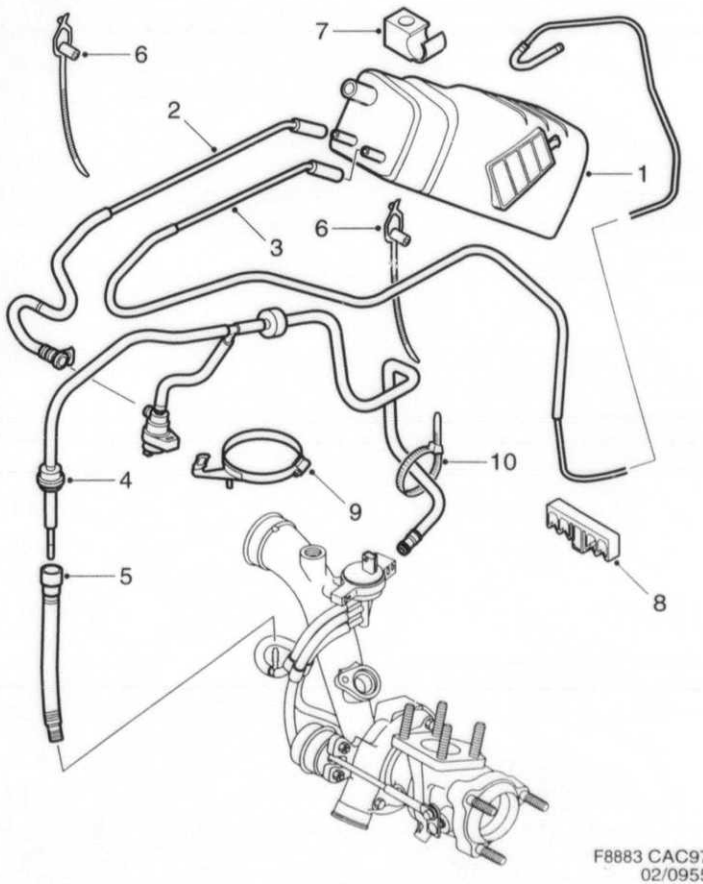

F8883 CAC97
02/0955

0955	Pos	Part No/Art nr	K S	Notes/Anmärkningar	Qty/ Antal	Description	Benämning	S L
0010	1	46 72 556			1	Carbon filter	Kolfilter	8
0020	2	43 96 149			1	Evacuation pipe	Evakueringsledning	
0030	3	43 96 099			1	Tube	Rör	
0040	4	45 72 129		4-CYL	1	Evacuation pipe	Evakueringsledning	
0060	5	47 52 382		4-CYL	1	Evacuation pipe	Evakueringsledning	
0080	6	48 07 939			2	Tensioning band	Spännband	4
0090	7	46 71 756			2	Clamp	Klammer	5
0100	8	46 71 541			2	Clamp	Klammer	5
0110	9			See page 2-027, 1-D04		Hose clamp	Slangklämma	

MASTER INDEX

0	General	1-A02
2	Engine	1-C02
3A	Electrical systems, instruments	1-F02
4	Transmission	1-I02
5	Brakes	1-K02
6	Front assembly, Steering	1-L02
7	Suspension, Wheels	2-A02
8A	Body, external	2-B02
8B	Body, internal	2-F02
8C	Body, heating and ventilation	2-H02
8D	Tool, Labels	2-I02
9	Accessories	2-J02
10	Numerical register	3-A02

2 GROUP INDEX

Engine suspension	1-C06
Engine body 4-cyl	1-C08
Lubrication system	1-C24
Fuel system	1-D04
Inled and exhaust system	1-D18
Cooling system	1-E04
Engine control	1-E18
Supercharging system	1-E20
Engine bay cover	1-E22
Kits	1-E24

1-D18 *Intake manifold 4-cylinder* / *Inloppsrör 4-cylindrig*

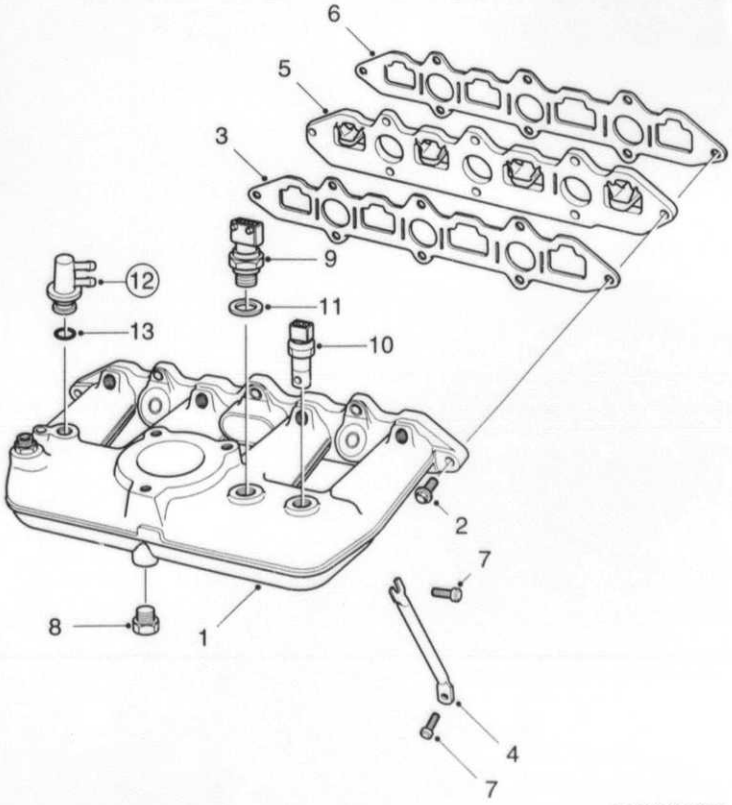

F8884 CAC97
02/1000

1000	Pos	Part No/Art nr	K S	Notes/Anmärkningar	Qty/ Antal	Description	Benämning	S L
0010	1	91 86 107			1	Intake manifold	Inloppsrör	
0020	2	*79 82 515*		NLS – USE 8084014	8	Screw	Skruv	5
0030	3	91 86 404			1	Gasket	Packning	8
0040	4	91 80 845			1	Stay	Stag	6
0050	5	91 85 844			1	Flange	Fläns	
0060	6	91 86 412			1	Gasket	Packning	8
0070	7	79 78 182			2	Screw	Skruv	5
0080	8	81 23 739			1	Plug	Propp	5
0090	9	91 71 497			1	Pressure sensor	Tryckgivare	
0100	10	91 74 442			1	Intake air temp. sensor	Temperaturgivare	8
0110	11	81 24 125			1	Gasket	Packning	4
0120	12	91 78 989			1	Nipple	Nippel	5
0130	13	91 37 993			1	.O-ring	.O-ring	2

MASTER INDEX

0	General	1-A02
2	Engine	1-C02
3A	Electrical systems, instruments	1-F02
4	Transmission	1-I02
5	Brakes	1-K02
6	Front assembly, Steering	1-L02
7	Suspension, Wheels	2-A02
8A	Body, external	2-B02
8B	Body, internal	2-F02
8C	Body, heating and ventilation	2-H02
8D	Tool, Labels	2-I02
9	Accessories	2-J02
10	Numerical register	3-A02

2 GROUP INDEX

Engine suspension	1-C06
Engine body 4-cyl	1-C08
Lubrication system	1-C24
Fuel system	1-D04
Inled and exhaust system	1-D18
Cooling system	1-E04
Engine control	1-E18
Supercharging system	1-E20
Engine bay cover	1-E22
Kits	1-E24

1 -D20 *Throttle body 4-cylinder* / *Spjällhus 4-cylindrig*

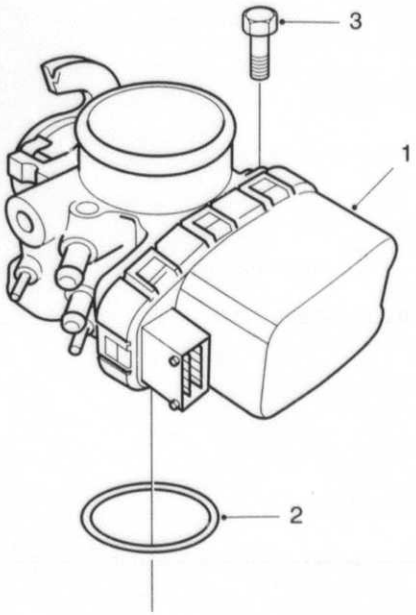

F8885 CAC97
02/1110

1110	Pos	Part No/Art nr	K S	Notes/Anmärkningar	Qty/ Antal	Description	Benämning	S L
0010	1	91 73 485			1	Throttle body	Spjällhus	
0020	2	91 76 918			1	O-ring	O-ring	
0030	3	79 78 117			3	Screw	Skruv	5

MASTER INDEX

0	General	1-A02
2	Engine	1-C02
3A	Electrical systems, instruments	1-F02
4	Transmission	1-I02
5	Brakes	1-K02
6	Front assembly, Steering	1-L02
7	Suspension, Wheels	2-A02
8A	Body, external	2-B02
8B	Body, internal	2-F02
8C	Body, heating and ventilation	2-H02
8D	Tool, Labels	2-I02
9	Accessories	2-J02
10	Numerical register	3-A02

2 GROUP INDEX

Engine suspension	1-C06
Engine body 4-cyl	1-C08
Lubrication system	1-C24
Fuel system	1-D04
Inled and exhaust system	1-D18
Cooling system	1-E04
Engine control	1-E18
Supercharging system	1-E20
Engine bay cover	1-E22
Kits	1-E24

1-D22 Exhaust manifold 4-cylinder / Avgassamlare 4-cylindrig

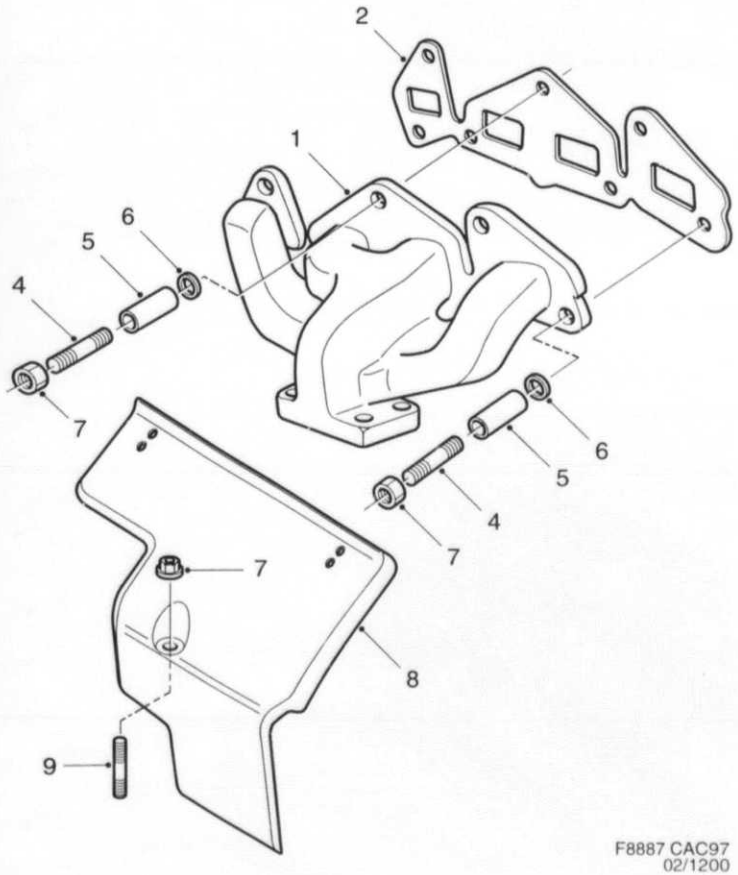

F8887 CAC97
02/1200

1200	Pos	Part No/Art nr	K S	Notes/Anmärkningar	Qty/ Antal	Description	Benämning	S L
0010	1	91 76 900			1	Exhaust manifold	Avgassamlare	
0020	2	91 66 497			1	Gasket	Packning	8
0030	3	79 85 146			3	Stud screw	Pinnbult	5
0040	4	79 85 161			4	Stud screw	Pinnbult	5
0050	5	93 06 812			4	Spacer sleeve	Distanshylsa	3
0060	6	91 66 398			7	Washer	Bricka	5
0070	7	91 69 277			8	Nut	Mutter	3
0080	8	91 76 223			1	Heat shield	Värmesköld	
0090	9	93 57 138			1	Screw	Skruv	5

MASTER INDEX

0	General	1-A02
2	Engine	1-C02
3A	Electrical systems, instruments	1-F02
4	Transmission	1-I02
5	Brakes	1-K02
6	Front assembly, Steering	1-L02
7	Suspension, Wheels	2-A02
8A	Body, external	2-B02
8B	Body, internal	2-F02
8C	Body, heating and ventilation	2-H02
8D	Tool, Labels	2-I02
9	Accessories	2-J02
10	Numerical register	3-A02

2 GROUP INDEX

Engine suspension	1-C06
Engine body 4-cyl	1-C08
Lubrication system	1-C24
Fuel system	1-D04
Inled and exhaust system	1-D18
Cooling system	1-E04
Engine control	1-E18
Supercharging system	1-E20
Engine bay cover	1-E22
Kits	1-E24

1-D24

Heated oxygen sensor
4-cylinder

Syresensor
4-cylindrig

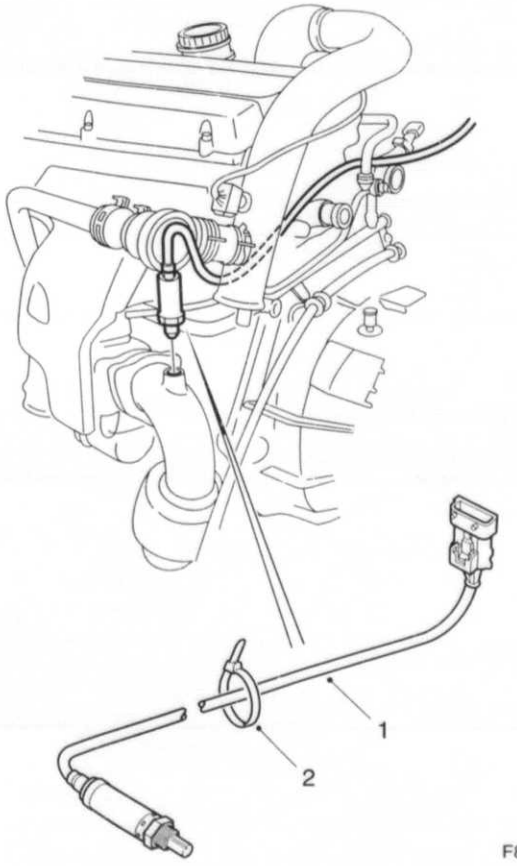

F8794 CAC97
02/1500

1500	Pos	Part No/Art nr	K S	Notes/Anmärkningar	Qty/ Antal	Description	Benämning	S L
0010	1	46 62 359			1	Heated oxygen sensor	Syresensor	4
0020	1	46 60 445		176)	1	Heated oxygen sensor	Syresensor	4
0030	2	79 71 880		L=259 MM	2	Tensioning band	Spännband	4

176. Lead resistant Blytålig.

MASTER INDEX

0	General	1-A02
2	Engine	1-C02
3A	Electrical systems, instruments	1-F02
4	Transmission	1-I02
5	Brakes	1-K02
6	Front assembly, Steering	1-L02
7	Suspension, Wheels	2-A02
8A	Body, external	2-B02
8B	Body, internal	2-F02
8C	Body, heating and ventilation	2-H02
8D	Tool, Labels	2-I02
9	Accessories	2-J02
10	Numerical register	3-A02

2 GROUP INDEX

Engine suspension	1-C06
Engine body 4-cyl	1-C08
Lubrication system	1-C24
Fuel system	1-D04
Inlet and exhaust system	1-D18
Cooling system	1-E04
Engine control	1-E18
Supercharging system	1-E20
Engine bay cover	1-E22
Kits	1-E24

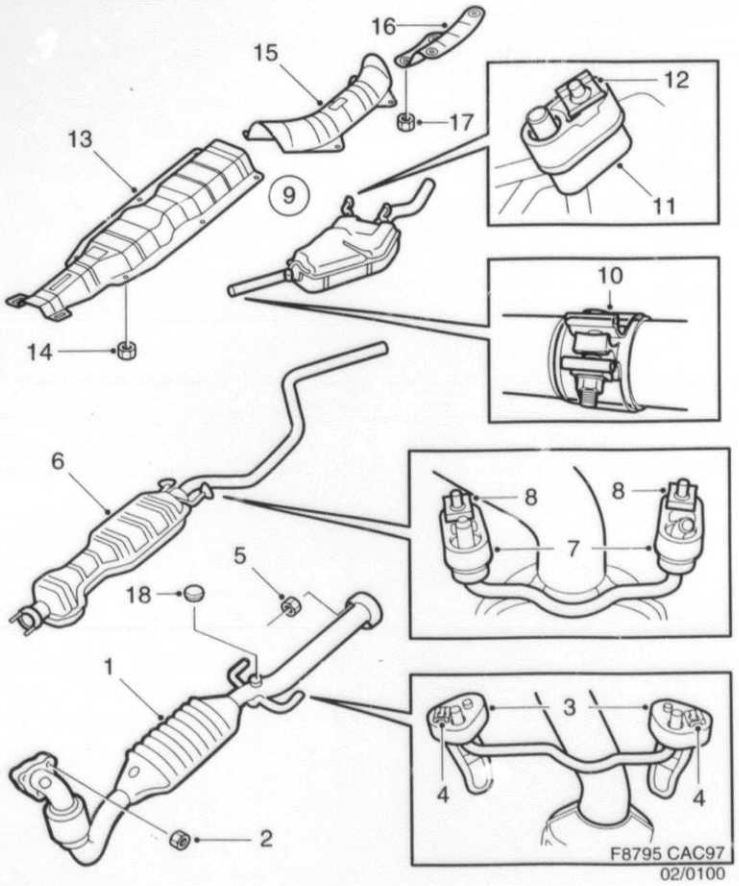

Exhaust system

1-E02

4-cylinder

Avgassystem

4-cylindrig

1520	Pos	Part No/Art nr	K S	Notes/Anmärkningar	Qty/ Antal	Description	Benämning	S L
0010	1	48 98 342			1	Exhaust system	Avgassystem	8
0030	2	75 19 432			3	Nut	Mutter	5
0040	3	46 72 861			2	Rubber mounting	Gummiupphängning	1
0050	4	46 85 590			2	Clip	Clips	
0060	5	79 67 953			2	Nut	Mutter	5
0070	6	47 53 745			1	Silencer	Ljuddämpare	1
0080	7	45 74 539			2	Rubber mounting	Gummiupphängning	1
0090	8	46 85 608			2	Clip	Clips	
0100	9	47 53 752			1	Silencer	Ljuddämpare	1
0110	10	47 51 756			1	,Exhaust pipe clamp	,Avgasrörklamma	
0120	11	45 74 539			3	Rubber mounting	Gummiupphängning	1
0130	12	46 85 608			3	Clip	Clips	
0140	13	46 70 741			1	Heat shield	Värmesköld	3
0150	14	46 85 582			10	Nut	Mutter	5
0160	15			See page 2-029, 1-D06		Heat shield	Värmesköld	
0170	16	45 72 214			1	Heat shield	Värmesköld	3
0180	17	46 85 582			4	Nut	Mutter	5
0190	18	81 23 747			1	Plug	Propp	5

MASTER INDEX

0	General	1-A02
2	Engine	1-C02
3A	Electrical systems, instruments	1-F02
4	Transmission	1-I02
5	Brakes	1-K02
6	Front assembly, Steering	1-L02
7	Suspension, Wheels	2-A02
8A	Body, external	2-B02
8B	Body, internal	2-F02
8C	Body, heating and ventilation	2-H02
8D	Tool, Labels	2-I02
9	Accessories	2-J02
10	Numerical register	3-A02

2 GROUP INDEX

Engine suspension	1-C06
Engine body 4-cyl	1-C08
Lubrication system	1-C24
Fuel system	1-D04
Inled and exhaust system	1-D18
Cooling system	1-E04
Engine control	1-E18
Supercharging system	1-E20
Engine bay cover	1-E22
Kits	1-E24

1-E04

Cooling system 4-cyl.

Kylsystem 4-cyl

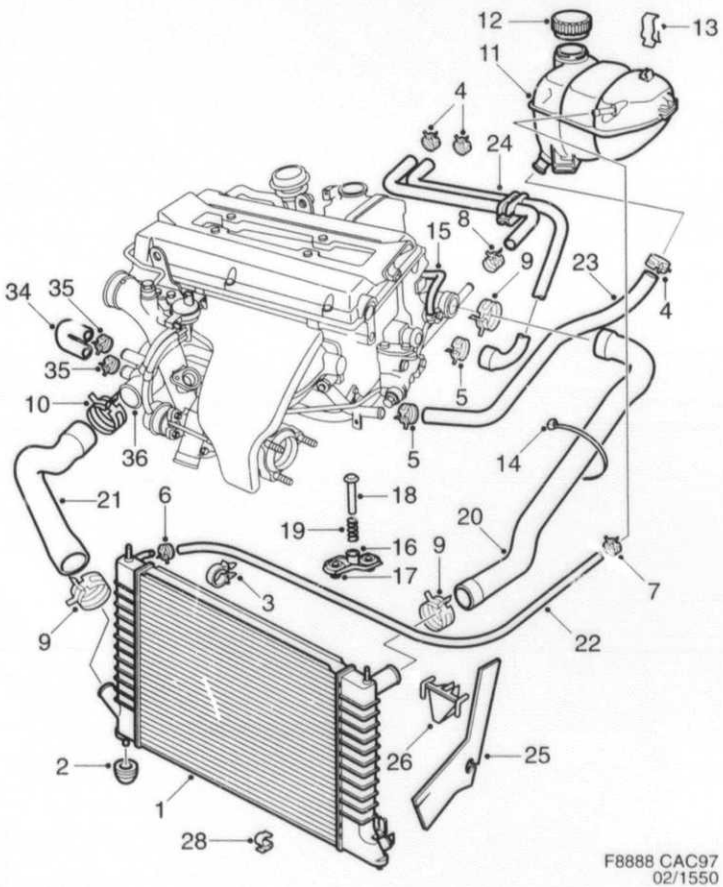

1550	Pos	Part No/Art nr	K S	Notes/Anmärkningar	Qty/ Antal	Description	Benämning	S L
0010	1	45 75 700		M	1	Radiator	Kylare	4
0020	1	45 75 718		A	1	Radiator	Kylare	4
0030	2	42 83 594			2	Rubber bushing	Gummibussning	4
0040	3	85 36 419			3	Clip	Clips	5
0050	4	45 76 609			3	Hose clamp	Slangklamma	5
0060	5	45 76 591			2	Hose clamp	Slangklamma	5
0070	6	45 76 575			1	Hose clamp	Slangklamma	5
0080	7	46 20 365			1	Hose clamp	Slangklamma	
0090	8	45 76 617			1	Hose clamp	Slangklamma	5
0100	9	48 97 732			3	Hose clamp	Slangklamma	5
0110	10	48 97 757			1	Hose clamp	Slangklamma	5
0120	11	45 75 684			1	Expansion tank	Expansionstank	3
0130	12	43 95 513			1	Cover	Lock	3
0140	13	43 97 485			1	Clamp	Klammer	5
0150	14	79 71 880			4	Tensioning band	Spännband	4
0160	15			See page 2-025, 1-D02		Hose	Slang	
0170	16	45 76 500			2	Bracket	Fäste	6
0180	17	45 76 492			4	Rubber bushing	Gummibussning	4
0190	18	48 95 108			2	Pin	Tapp	5
0200	19	48 95 116			2	Spring	Fjäder	5
0210	20	43 97 501		4-CYL	1	Hose	Slang	2
0220	21	48 99 449		4-CYL	1	Hose	Slang	2
0230	22	43 97 527		4-CYL	1	Hose	Slang	2
0240	23	43 97 535		4-CYL	1	Hose	Slang	2
0250	24	47 29 943		4-CYL	1	Hose	Slang	3
0260	25	47 26 220		LH AC/ACC	1	Air shield	Luftskärm	5
0270	25	47 26 238		RH AC/ACC	1	Air shield	Luftskärm	5
0290	26	48 99 795		AC/ACC	2	Bracket	Fäste	5
0300	27	47 53 976		AC/ACC	1	Air shield	Luftskärm	5
0310	28	71 08 491			2	Clamp	Klammer	5
0320	34	91 78 849			1	Hose	Slang	2
0330	35	45 76 591			2	Hose clamp	Slangklamma	5
0340	36			See page 2-061, 1-E14		Coolant pump	Kylvätskepump	
0350	37	47 56 714		4-CYL, AC/ACC	1	Valve	Ventil	5
0360	38	83 66 791		AC/ACC	1	Pipe	Rör	4

MASTER INDEX

0	General	1-A02
2	Engine	1-C02
3A	Electrical systems, instruments	1-F02
4	Transmission	1-I02
5	Brakes	1-K02
6	Front assembly, Steering	1-L02
7	Suspension, Wheels	2-A02
8A	Body, external	2-B02
8B	Body, internal	2-F02
8C	Body, heating and ventilation	2-H02
8D	Tool, Labels	2-I02
9	Accessories	2-J02
10	Numerical register	3-A02

2 GROUP INDEX

Engine suspension	1-C06
Engine body 4-cyl	1-C08
Lubrication system	1-C24
Fuel system	1-D04
Inled and exhaust system	1-D18
Cooling system	1-E04
Engine control	1-E18
Supercharging system	1-E20
Engine bay cover	1-E22
Kits	1-E24

1-E06 Fan motor / Fläktmotor

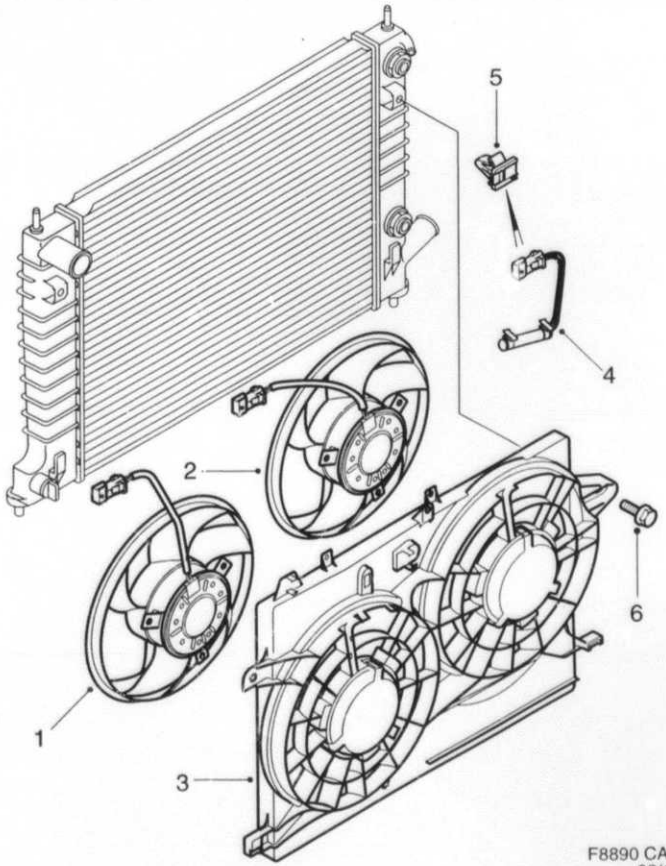

F8890 CAC97
02/1565

1565	Pos	Part No/Art nr	K S	Notes/Anmärkningar	Qty/ Antal	Description	Benämning	S L
0010	1	45 76 351		4-CYL	1	Fan unit	Fläktenhet	4
0020	2	45 76 443		4-CYL AC/ACC	1	Fan unit	Fläktenhet	4
0030	3	45 76 344		4-CYL	1	Fan shroud	Fläktkåpa	4
0040	4	45 76 484		4-CYL	1	Resistor	Motstånd	5
0050	5	41 76 095		4-CYL	2	Clip	Clips	5
0060	6	79 76 947		4-CYL	2	Screw	Skruv	5

MASTER INDEX

0	General	1-A02
2	Engine	1-C02
3A	Electrical systems, instruments	1-F02
4	Transmission	1-I02
5	Brakes	1-K02
6	Front assembly, Steering	1-L02
7	Suspension, Wheels	2-A02
8A	Body, external	2-B02
8B	Body, internal	2-F02
8C	Body, heating and ventilation	2-H02
8D	Tool, Labels	2-I02
9	Accessories	2-J02
10	Numerical register	3-A02

2 GROUP INDEX

Engine suspension	1-C06
Engine body 4-cyl	1-C08
Lubrication system	1-C24
Fuel system	1-D04
Inled and exhaust system	1-D18
Cooling system	1-E04
Engine control	1-E18
Supercharging system	1-E20
Engine bay cover	1-E22
Kits	1-E24

1 -E08

Charge cooler

Laddluftkylare

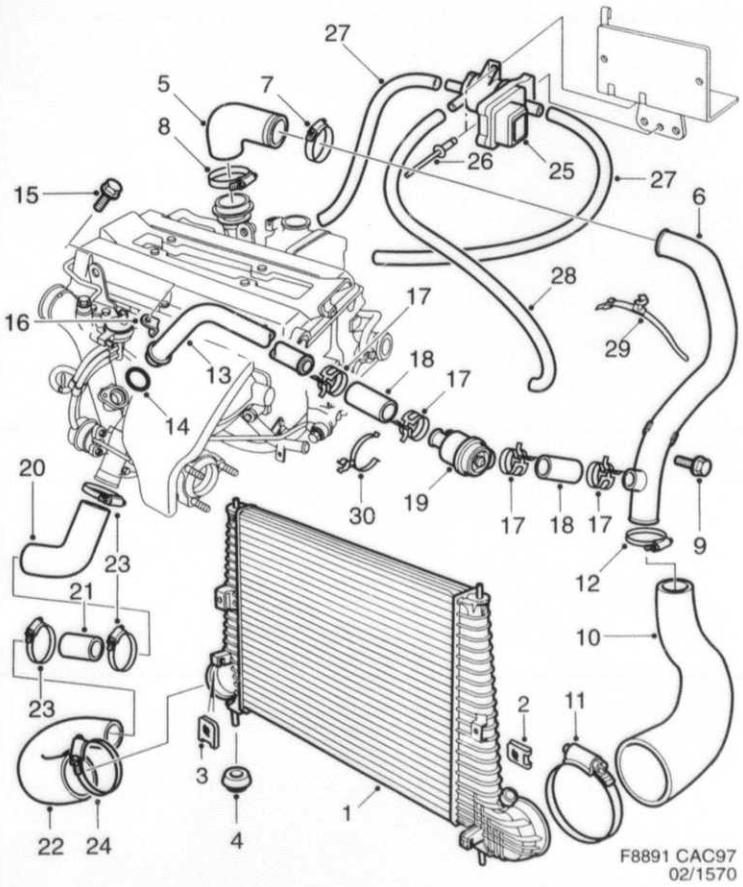

1570	Pos	Part No/Art nr	K S	Notes/Anmärkningar	Qty/ Antal	Description	Benämning	S L
0010	1	45 76 039		4-CYL	1	Charge air cooler	Laddluftkylare	4
0020	2	82 67 098		AC/ACC	2	Clip	Clips	5
0030	3	82 67 098		4-CYL	2	Clip	Clips	5
0040	4	42 83 594		4-CYL	2	Rubber bushing	Gummibussning	4
0050	5	46 70 105			1	Hose	Slang	4
0060	6	46 70 097			1	Charge air pipe	Laddluftrör	4
0070	7	79 70 130			1	Hose clamp	Slangklamma	5
0080	8	79 70 148				Hose clamp	Slangklamma	5
0090	9	79 78 190			1	Screw	Skruv	5
0100	10	45 72 632			1	Air hose	Luftslang	5
0110	11	79 70 155			1	Hose clamp	Slangklamma	5
0120	12	79 70 130			1	Hose clamp	Slangklamma	5
0130	13	45 72 590			1	Pipe	Rör	6
0140	14	79 85 781			1	O-ring	O-ring	2
0150	15	79 78 091			1	Screw	Skruv	5
0160	16	46 70 352			1	Clamp	Klämma	6
0170	17	45 76 617			4	Hose clamp	Slangklamma	5
0180	18	75 91 936			2	Hose	Slang	4
0190	19	43 91 157			1	Charge air bypass valve	By-passventil	2
0200	20	46 72 135			1	Air hose	Luftslang	5
0210	21	46 72 143			1	Pipe	Rör	6
0220	22	46 72 150			1	Air hose	Luftslang	5
0230	23	79 70 130			3	Hose clamp	Slangklamma	5
0240	24	79 70 148			1	Hose clamp	Slangklamma	5
0250	25	91 79 011			1	Vacuum valve	Vakuumventil	
0260	26	79 72 516			2	Rivet	Nit	5
0270	27	91 36 243		L=330 MM	2	Vaccum hose	Vakuumslang	5
0280	28	91 36 243		L=850 MM	1	Vaccum hose	Vakuumslang	5
0290	29	73 98 977			2	Tensioning band	Spännband	5
0300	30	73 98 407			1	Clamp	Klammer	5

MASTER INDEX

0	General	1-A02
2	Engine	1-C02
3A	Electrical systems, instruments	1-F02
4	Transmission	1-I02
5	Brakes	1-K02
6	Front assembly, Steering	1-L02
7	Suspension, Wheels	2-A02
8A	Body, external	2-B02
8B	Body, internal	2-F02
8C	Body, heating and ventilation	2-H02
8D	Tool, Labels	2-I02
9	Accessories	2-J02
10	Numerical register	3-A02

2 GROUP INDEX

Engine suspension	1-C06
Engine body 4-cyl	1-C08
Lubrication system	1-C24
Fuel system	1-D04
Inlet and exhaust system	1-D18
Cooling system	1-E04
Engine control	1-E18
Supercharging system	1-E20
Engine bay cover	1-E22
Kits	1-E24

1-E10 Air oil cooler Engine / Luftoljekylare Motor

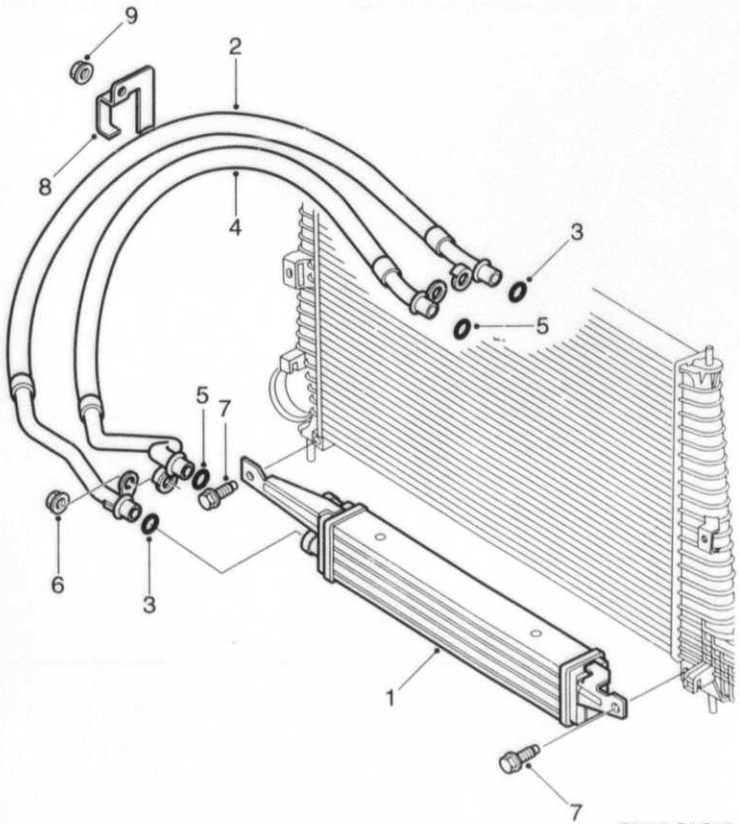

F8893 CAC97
02/1590

1590	Pos	Part No/Art nr	K S	Notes/Anmärkningar	Qty/ Antal	Description	Benämning	S L
0010	1	47 29 620		4-CYL	1	Oil cooler	Oljekylare	4
0020	2	47 26 436		4-CYL	1	Hose	Slang	3
0030	3	46 85 244			2	.O-ring	.O-ring	2
0040	4	47 26 428		4-CYL	1	Hose	Slang	3
0050	5	46 85 244			2	.O-ring	.O-ring	2
0060	6	79 77 929			2	Nut	Mutter	5
0070	7	79 76 947			2	Screw	Skruv	5
0080	8	47 26 345			1	Bracket	Fäste	5
0090	9	79 77 952			1	Hexagon nut	Sexkantsmutter	5
0100	10			See page 2-023, 1-C24		Intermediate section	Mellanstycke	

MASTER INDEX

0	General	1-A02
2	Engine	1-C02
3A	Electrical systems, instruments	1-F02
4	Transmission	1-I02
5	Brakes	1-K02
6	Front assembly, Steering	1-L02
7	Suspension, Wheels	2-A02
8A	Body, external	2-B02
8B	Body, internal	2-F02
8C	Body, heating and ventilation	2-H02
8D	Tool, Labels	2-I02
9	Accessories	2-J02
10	Numerical register	3-A02

2 GROUP INDEX

Engine suspension	1-C06
Engine body 4-cyl	1-C08
Lubrication system	1-C24
Fuel system	1-D04
Inled and exhaust system	1-D18
Cooling system	1-E04
Engine control	1-E18
Supercharging system	1-E20
Engine bay cover	1-E22
Kits	1-E24

1-E12 Air oil cooler / Luftoljekylare
Automatic transmission / Automatisk växellåda

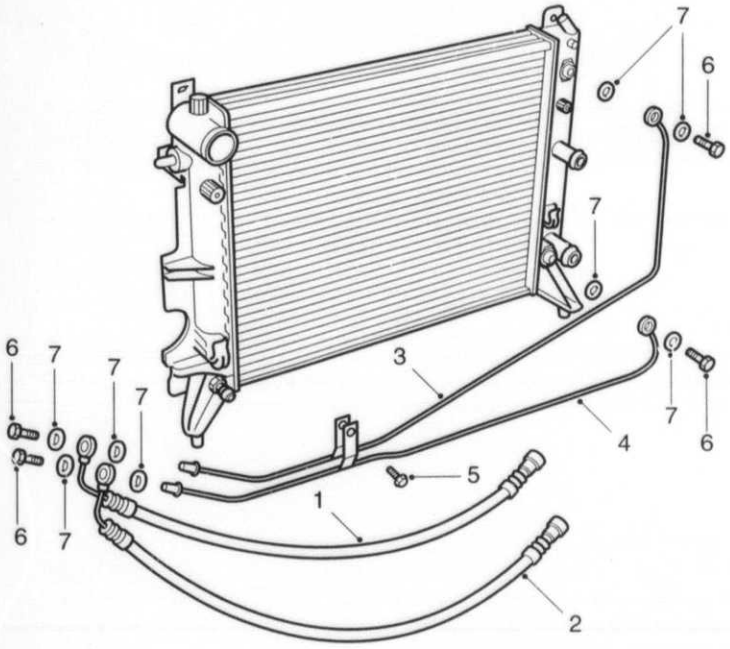

F8894 CAC97
02/1600

1600	Pos	Part No/Art nr	K S	Notes/Anmärkningar	Qty/ Antal	Description	Benämning	S L
0010	1	45 76 260		4-CYL	1	Hydraulic hose	Hydraulslang	3
0030	2	45 76 278		4-CYL	1	Hydraulic hose	Hydraulslang	3
0050	3	45 76 906		4-CYL	1	Hydraulic oil pipe	Hydrauloljerör	3
0060	4	45 76 914		4-CYL	1	Hydraulic oil pipe	Hydrauloljerör	4
0070	5	79 83 000		4-CYL	1	Hexagon screw	Sexkantsskruv	5
0080	6	43 74 211			4	Banjo bolt	Hålbult	5
0090	7	41 61 162			8	Seal	Tätning	5

MASTER INDEX

0	General	1-A02
2	Engine	1-C02
3A	Electrical systems, instruments	1-F02
4	Transmission	1-I02
5	Brakes	1-K02
6	Front assembly, Steering	1-L02
7	Suspension, Wheels	2-A02
8A	Body, external	2-B02
8B	Body, internal	2-F02
8C	Body, heating and ventilation	2-H02
8D	Tool, Labels	2-I02
9	Accessories	2-J02
10	Numerical register	3-A02

2 GROUP INDEX

Engine suspension	1-C06
Engine body 4-cyl	1-C08
Lubrication system	1-C24
Fuel system	1-D04
Inled and exhaust system	1-D18
Cooling system	1-E04
Engine control	1-E18
Supercharging system	1-E20
Engine bay cover	1-E22
Kits	1-E24

1-E14 Coolant pump 4-cylinder / Kylvätskepump 4-cylindrig

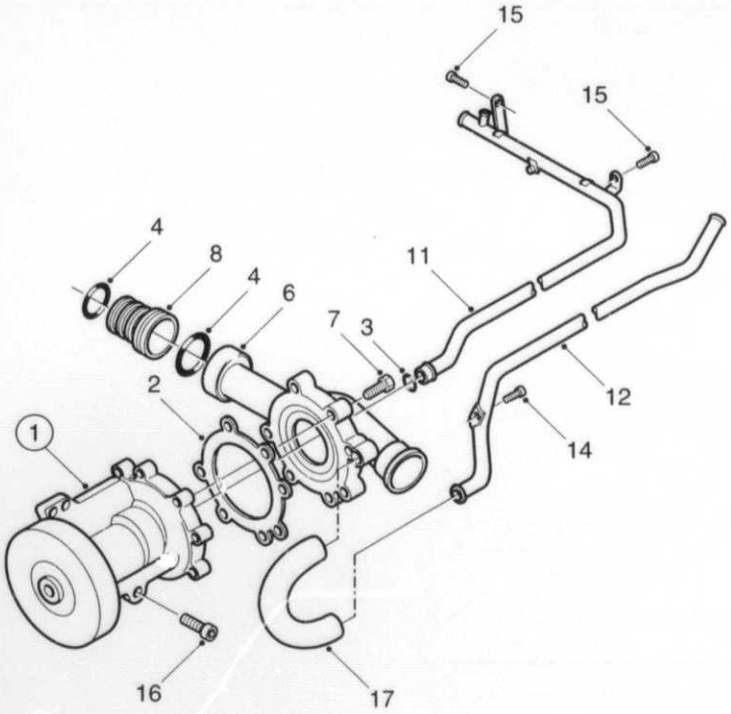

F8895 CAC97
02/1700

1700	Pos	Part No/Art nr	K S	Notes/Anmärkningar	Qty/ Antal	Description	Benämning	S L
0010	1	88 22 710			1	Coolant pump	Kylvätskepump	2
0020	2	91 44 767			1	.Gasket	.Packning	2
0030	3	91 46 598			1	.O-ring	.O-ring	2
0040	4	91 46 606			2	.O-ring	.O-ring	2
0050	6	91 73 741			1	.Pump connection	.Pumpanslutning	6
0060	7	80 59 586			7	.Screw	.Skruv	5
0070	8	91 77 031			1	Tube	Rör	5
0080	11	91 82 544			1	Tube	Rör	5
0090	12	91 46 523			1	Tube	Rör	5
0100	14	79 78 109			1	Screw	Skruv	5
0110	15	79 78 091			2	Screw	Skruv	5
0120	16	79 78 216			3	Hexagon screw	Sexkantsskruv	5
0130	17			See page 2-051, 1-E04		Radiator hose	Kylarslang	

MASTER INDEX

0	General	1-A02
2	Engine	1-C02
3A	Electrical systems, instruments	1-F02
4	Transmission	1-I02
5	Brakes	1-K02
6	Front assembly, Steering	1-L02
7	Suspension, Wheels	2-A02
8A	Body, external	2-B02
8B	Body, internal	2-F02
8C	Body, heating and ventilation	2-H02
8D	Tool, Labels	2-I02
9	Accessories	2-J02
10	Numerical register	3-A02

2 GROUP INDEX

Engine suspension	1-C06
Engine body 4-cyl	1-C08
Lubrication system	1-C24
Fuel system	1-D04
Inled and exhaust system	1-D18
Cooling system	1-E04
Engine control	1-E18
Supercharging system	1-E20
Engine bay cover	1-E22
Kits	1-E24

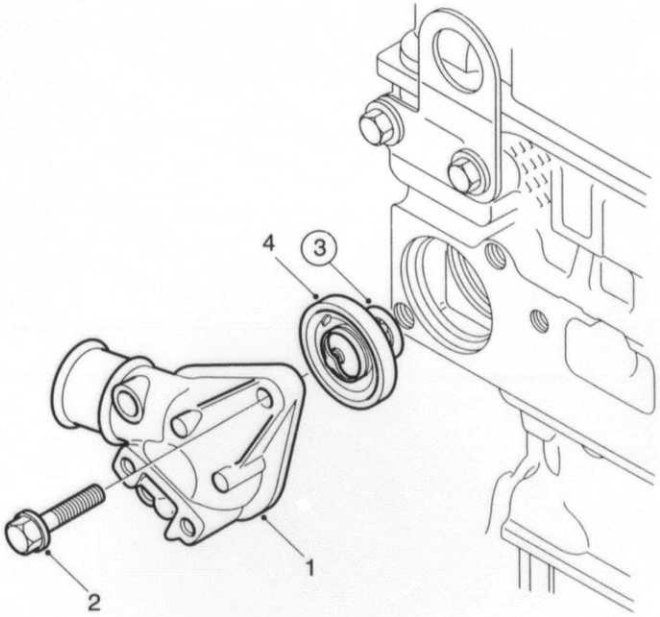

F8896 CAC97
02/1750

1750	Pos	Part No/Art nr	K S	Notes/Anmärkningar	Qty/ Antal	Description	Benämning	S L
0010	1	91 73 352			1	Cover	Lock	5
0020	2	79 78 190			2	Screw	Skruv	5
0030	3	88 22 025		See page 2-071, 1-E24	1	Thermostat kit	Termostatsats	8
0040	4	83 52 692			1	.Gasket	.Packning	

MASTER INDEX

0	General	1-A02
2	Engine	1-C02
3A	Electrical systems, instruments	1-F02
4	Transmission	1-I02
5	Brakes	1-K02
6	Front assembly, Steering	1-L02
7	Suspension, Wheels	2-A02
8A	Body, external	2-B02
8B	Body, internal	2-F02
8C	Body, heating and ventilation	2-H02
8D	Tool, Labels	2-I02
9	Accessories	2-J02
10	Numerical register	3-A02

2 GROUP INDEX

Engine suspension	1-C06
Engine body 4-cyl	1-C08
Lubrication system	1-C24
Fuel system	1-D04
Inled and exhaust system	1-D18
Cooling system	1-E04
Engine control	1-E18
Supercharging system	1-E20
Engine bay cover	1-E22
Kits	1-E24

1-E18 Accelerator control / Gasreglage

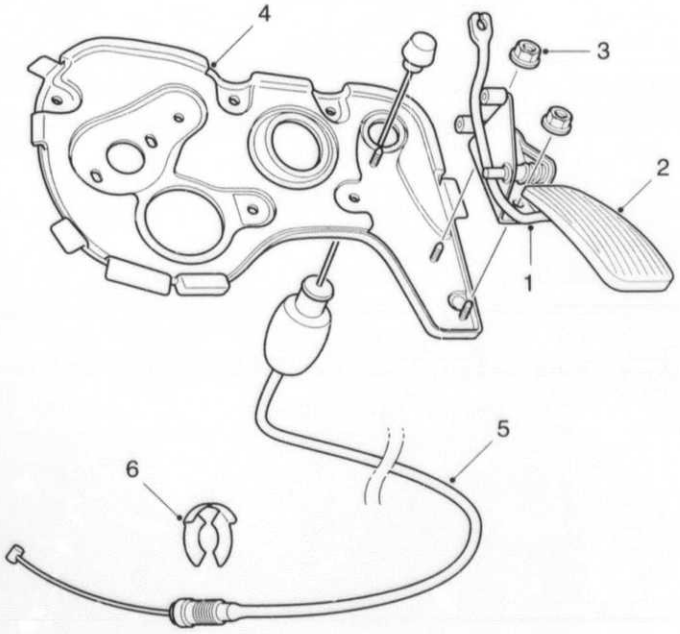

F8897 CAC97
02/1800

1800	Pos	Part No/Art nr	K S	Notes/Anmärkningar	Qty/ Antal	Description	Benämning	S L
0010	1	48 36 177		LHD	1	Accelerator arm	Gaspedalarm	
0030	1	48 36 185		RHD	1	Accelerator arm	Gaspedalarm	
0050	3	79 71 922		LHD	2	Nut	Mutter	3
0060	3	79 71 922		RHD	3	Nut	Mutter	3
0070	4			See page 5-015, 1-K16		Cowl plate	Torpedplåt	
0080	5	45 73 028			1	Throttle control cable	Gasreglagewire	3
0110	6	46 85 053			1	Lock ring	Säkringsring	5

MASTER INDEX

0	General	1-A02
2	Engine	1-C02
3A	Electrical systems, instruments	1-F02
4	Transmission	1-I02
5	Brakes	1-K02
6	Front assembly, Steering	1-L02
7	Suspension, Wheels	2-A02
8A	Body, external	2-B02
8B	Body, internal	2-F02
8C	Body, heating and ventilation	2-H02
8D	Tool, Labels	2-I02
9	Accessories	2-J02
10	Numerical register	3-A02

2 GROUP INDEX

Engine suspension	1-C06
Engine body 4-cyl	1-C08
Lubrication system	1-C24
Fuel system	1-D04
Inled and exhaust system	1-D18
Cooling system	1-E04
Engine control	1-E18
Supercharging system	1-E20
Engine bay cover	1-E22
Kits	1-E24

1 -E20

Turbocharger
Turbokompressor

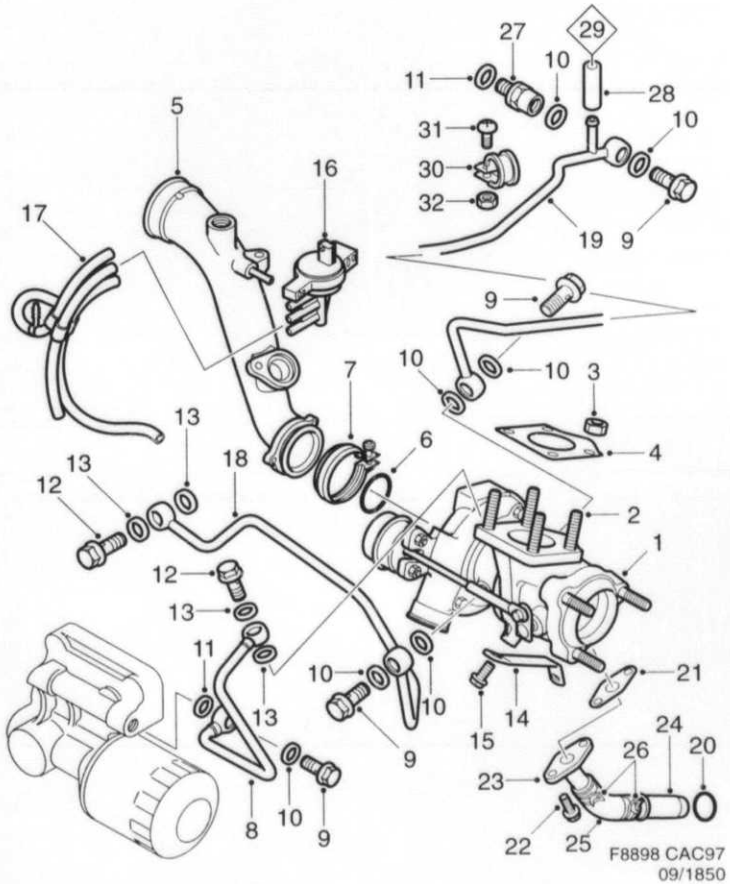

1850	Pos	Part No/Art nr	K S	Notes/Anmärkningar	Qty/ Antal	Description	Benämning	S L
0010	1	91 72 123		7)	1	Turbocharger	Turbokompressor	4
0020	2	93 57 138			7	Screw	Skruv	5
0030	3	91 13 937			1	Gasket	Packning	2
0040	4	91 16 674			4	Nut	Mutter	5
0050	5	91 73 378			1	Tube	Rör	5
0060	6	91 79 615			1	O-ring	O-ring	2
0070	7	91 78 666			1	Clamp	Klammer	5
0080	8	91 72 149			1	Tube	Rör	5
0090	9	91 43 967			4	Banjo screw	Banjoskruv	5
0100	10	81 24 141			6	Seal	Tätning	5
0110	11	*83 26 712*		NLS - USE 4161162	2	Seal	Tätning	5
0120	12	91 36 524			2	Banjo screw	Banjoskruv	5
0130	13	81 24 133			3	Gasket	Packning	5
0140	14	91 79 342			1	Stay	Stag	5
0150	15	79 78 182			2	Screw	Skruv	5
0160	16	91 75 290			1	Solenoid valve	Magnetventil	8
0170	17	91 79 516			1	Vaccum hose	Vakuumslang	3
0180	18	91 72 164			1	Tube	Rör	5
0190	19	91 82 445			1	Tube	Rör	5
0200	20	75 02 263			1	O-ring	O-ring	2
0210	21	91 07 582			1	Seal	Tätning	5
0220	22	79 78 109			2	Screw	Skruv	5
0230	23	91 80 514			1	Tube	Rör	5
0240	24	91 80 522			1	Tube	Rör	5
0250	25	91 79 326			1	Hose	Slang	5
0260	26	45 76 591			2	Hose clamp	Slangklamma	5
0270	27	91 80 597			1	Nipple	Nippel	5
0280	28	91 72 487			1	Vaccum hose	Vakuumslang	
0290	29			See page 2-043, 1-D20		Electr. throttle actuator	Spjälihus	
0300	30	79 69 355			1	Clamp	Klammer	5
0310	31	79 78 117			1	Screw	Skruv	5
0320	32	79 77 929			1	Nut	Mutter	5

7. Also available as exchange unit. Finns även som utbytesenhet.

MASTER INDEX

0	General	1-A02
2	Engine	1-C02
3A	Electrical systems, instruments	1-F02
4	Transmission	1-I02
5	Brakes	1-K02
6	Front assembly, Steering	1-L02
7	Suspension, Wheels	2-A02
8A	Body, external	2-B02
8B	Body, internal	2-F02
8C	Body, heating and ventilation	2-H02
8D	Tool, Labels	2-I02
9	Accessories	2-J02
10	Numerical register	3-A02

2 GROUP INDEX

Engine suspension	1-C06
Engine body 4-cyl	1-C08
Lubrication system	1-C24
Fuel system	1-D04
Inled and exhaust system	1-D18
Cooling system	1-E04
Engine control	1-E18
Supercharging system	1-E20
Engine bay cover	1-E22
Kits	1-E24

1-E22

Engine bay cover
Motorrumsavtäckning

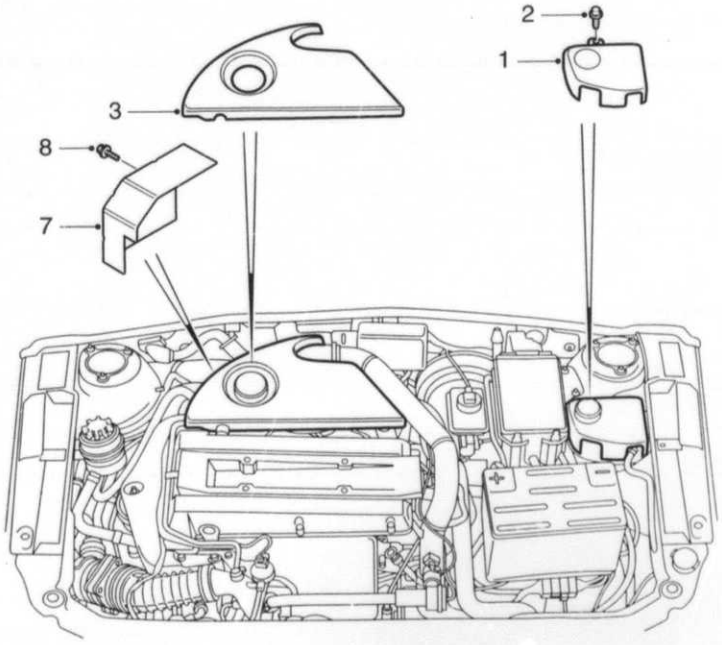

F8899 CAC97
02/2000

2000	Pos	Part No/Art nr	K S	Notes/Anmärkningar	Qty/ Antal	Description	Benämning	S L
0010	1	47 26 261			1	Cover	Kåpa	5
0020	2	79 72 938			1	Screw	Skruv	5
0030	3	45 73 242		4-CYL	1	Engine casing	Motorkåpa	
0070	7	48 98 714		4-CYL	1	Cover	Kåpa	
0080	8	79 78 091		4-CYL	2	Screw	Skruv	5

MASTER INDEX

0	General	1-A02
2	Engine	1-C02
3A	Electrical systems, instruments	1-F02
4	Transmission	1-I02
5	Brakes	1-K02
6	Front assembly, Steering	1-L02
7	Suspension, Wheels	2-A02
8A	Body, external	2-B02
8B	Body, internal	2-F02
8C	Body, heating and ventilation	2-H02
8D	Tool, Labels	2-I02
9	Accessories	2-J02
10	Numerical register	3-A02

2 GROUP INDEX

Engine suspension	1-C06
Engine body 4-cyl	1-C08
Lubrication system	1-C24
Fuel system	1-D04
Inled and exhaust system	1-D18
Cooling system	1-E04
Engine control	1-E18
Supercharging system	1-E20
Engine bay cover	1-E22
Kits	1-E24

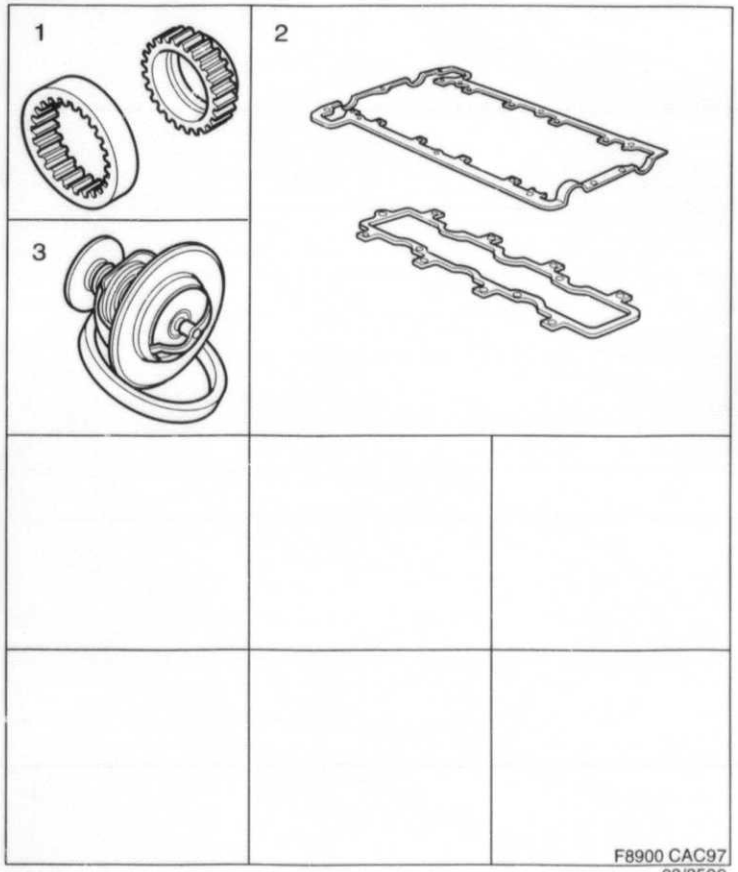

Kits
1-E24
Engine

Satser
Motor

2500	Pos	Part No/Art nr	K S	Notes/Anmärkningar	Qty/ Antal	Description	Benämning	S L
0010	1	88 22 702		4-CYL	X	Pump kit	Pumpsats	5
0020		91 73 584		1)	1	.Pump rotor	.Pumphjul	5
0030		91 73 592		1)	1	.Pump rotor	.Pumphjul	5
0040								
0050	2	88 22 041		4-CYL	X	Gasket kit	Packningsats	1
0060		91 33 026			1	.Gasket	.Packning	1
0070		91 33 034			1	.Gasket	.Packning	1
0075								
0080	3	88 22 025		4-CYL	X	Thermostat kit	Termostatsats	8
0090		91 66 687		1)	1	.Thermostat	.Termostat	1
0100		83 52 692			1	.Gasket	.Packning	

1. Not as separate spare part. Ej som separat reservdel.

MASTER INDEX

0	General	1-A02
2	Engine	1-C02
3A	Electrical systems, instruments	1-F02
4	Transmission	1-I02
5	Brakes	1-K02
6	Front assembly, Steering	1-L02
7	Suspension, Wheels	2-A02
8A	Body, external	2-B02
8B	Body, internal	2-F02
8C	Body, heating and ventilation	2-H02
8D	Tool, Labels	2-I02
9	Accessories	2-J02
10	Numerical register	3-A02

2 GROUP INDEX

Engine suspension	1-C06
Engine body 4-cyl	1-C08
Lubrication system	1-C24
Fuel system	1-D04
Inled and exhaust system	1-D18
Cooling system	1-E04
Engine control	1-E18
Supercharging system	1-E20
Engine bay cover	1-E22
Kits	1-E24

1-F02

3A

Electrical, general
Elektriskt, allmänt
Electrico, generalidades

0041

0010 TABLE OF CONTENTS

0030	**Battery**		
0040	Battery	3A : 5	1-F06
0050	**Alternator**		
0060	Alternator, Bosch 90A	3A : 7	1-F08
0070	Alternator, Bosch 130A, 4-cyl., AC/ACC	3A : 9	1-F10
0080	**Starter**		
0090	Starter, 4-cyl.	3A : 11	1-F12
0100	**Ignition system**		
0110	Trionic	3A : 13	1-F14
0120	**Lighting**		
0130	Headlamps	3A : 15	1-F16
0140	Lamp cluster	3A : 17	1-F18
0150	Fog light	3A : 19	1-F20
0160	Tail lamp	3A :	0-000
0170	Other lights	3A : 23	1-F24
0180	**Electrical equipment, other**		
0190	Horn	3A : 25	1-G02
0200	Windscreen wiper	3A : 27	1-G04
0210	Headlamp wiper	3A : 29	1-G06
0220	Washer unit	3A : 31	1-G08
0230	Switches	3A : 33	1-G10
0240	Actuators	3A : 37	1-G14
0250	Audio system	3A : 39	1-G16
0260	Telephone	3A : 43	1-G20
0270	Anti theft system TWICE	3A : 45	1-G22
0280	**Wiring and fuses**		
0290	Wiring, 1998	3A : 47	1-G24
0300	Tensioning band	3A : 57	1-H10
0310	Bushings, screws, clamps etc	3A : 59	1-H12
0320	Mounting details, body	3A : 61	1-H14
0330	Holders and brackets	3A : 63	1-H16
0340	Relays and fuses, 1998	3A : 65	1-H18
0350	Instruments	3A : 67	1-H20
0360	**Complete sets**		
0370	Electrical system	3A : 69	1-H22

MASTER INDEX

0	General	1-A02
2	Engine	1-C02
3A	Electrical systems, instruments	1-F02
4	Transmission	1-I02
5	Brakes	1-K02
6	Front assembly, Steering	1-L02
7	Suspension, Wheels	2-A02
8A	Body, external	2-B02
8B	Body, internal	2-F02
8C	Body, heating and ventilation	2-H02
8D	Tool, Labels	2-I02
9	Accessories	2-J02
10	Numerical register	3-A02

3A GROUP INDEX

Battery	1-F06
Alternator	1-F08
Starter	1-F12
Ignition system	1-F14
Lighting	1-F16
Electrical equipment, other	1-G02
Wiring and fuses	1-G24
Complete sets	1-H22

1-F03

INNEHÅLLSFÖRTECKNING

Batteri		
Batteri	3A : 5	1-F06
Generator		
Generator, Bosch 90A	3A : 7	1-F08
Generator, Bosch 130A 4-cyl., AC/ACC	3A : 9	1-F10
Startmotor		
Startmotor, 4-cyl.	3A : 11	1-F12
Tändsystem		
Trionic	3A : 13	1-F14
Belysning		
Strålkastare	3A : 15	1-F16
Kombinationslykta	3A : 17	1-F18
Dimljus	3A : 19	1-F20
Baklykta	3A : 21	1-F22
Övrig belysning	3A : 23	1-F24
Övrig elektrisk utrustning		
Signalhorn	3A : 25	1-G02
Vindrutetorkare	3A : 27	1-G04
Strålkastartorkare	3A : 29	1-G06
Spolaranläggning	3A : 31	1-G08
Strömställare	3A : 33	1-G10
Manöverdon	3A : 37	1-G14
Ljudsystem	3A : 39	1-G16
Telefon	3A : 43	1-G20
Stöldlarm, TWICE	3A : 45	1-G22
Ledningar och säkringar		
Ledningsnät 1998	3A : 47	1-G24
Spännband	3A : 57	1-H10
Bussningar, skruvar, klammor etc.	3A : 59	1-H12
Monteringsdetaljer, kaross	3A : 61	1-H14
Hållare och konsoler	3A : 63	1-H16
Reläer och säkringar, 1998	3A : 65	1-H18
Instrument	3A : 67	1-H20
Satser		
Elektriskt system	3A : 69	1-H22

1-F04

SUMARIO

Batteria		
Bateria	3A : 5	1-F06
Alternador		
Alternador, Bosch 90A	3A : 7	1-F08
Alternador, Bosch 130A, 4-cil., AC/ACC	3A : 9	1-F10
Motor de arranque		
Motor de arranque, 4 sil.	3A : 11	1-F12
Sistema de encendido		
Trionic	3A : 13	1-F14
Alumbrado		
Faros	3A : 15	1-F16
Faro combinado	3A : 17	1-F18
Faros antiniebla	3A : 19	1-F20
Piloto trasero	3A : 21	1-F22
Otro alumbrado	3A : 23	1-F24
Otro equipo electrico		
Senal acustica	3A : 25	1-G02
Limpiaparabrisas	3A : 27	1-G04
Limpiacristales de faro	3A : 29	1-G06
Unidad de lavado	3A : 31	1-G08
Contactos	3A : 33	1-G10
Dispositivos de mando	3A : 37	1-G14
Sistema de audio	3A : 39	1-G16
Telefonico	3A : 43	1-G20
Alarma antirobo TWICE	3A : 45	1-G22
Conductos y fusibles		
Conductos 1998	3A : 47	1-G24
Cinta tensora	3A : 57	1-H10
Casquillos, tornillos, abrazaderas etc	3A : 59	1-H12
Equipo de montaje, carroceria	3A : 61	1-H14
Portafusibles y cobsolas	3A : 63	1-H16
Reles y fusibili, 1998	3A : 65	1-H18
Instrumentos	3A : 67	1-H20
Juegos completos		
Sistema electrico	3A : 69	1-H22

MASTER INDEX

0	General	1-A02
2	Engine	1-C02
3A	Electrical systems, instruments	1-F02
4	Transmission	1-I02
5	Brakes	1-K02
6	Front assembly, Steering	1-L02
7	Suspension, Wheels	2-A02
8A	Body, external	2-B02
8B	Body, internal	2-F02
8C	Body, heating and ventilation	2-H02
8D	Tool, Labels	2-I02
9	Accessories	2-J02
10	Numerical register	3-A02

3A GROUP INDEX

Battery	1-F06
Alternator	1-F08
Starter	1-F12
Ignition system	1-F14
Lighting	1-F16
Electrical equipment, other	1-G02
Wiring and fuses	1-G24
Complete sets	1-H22

1-F06 Battery Batteri

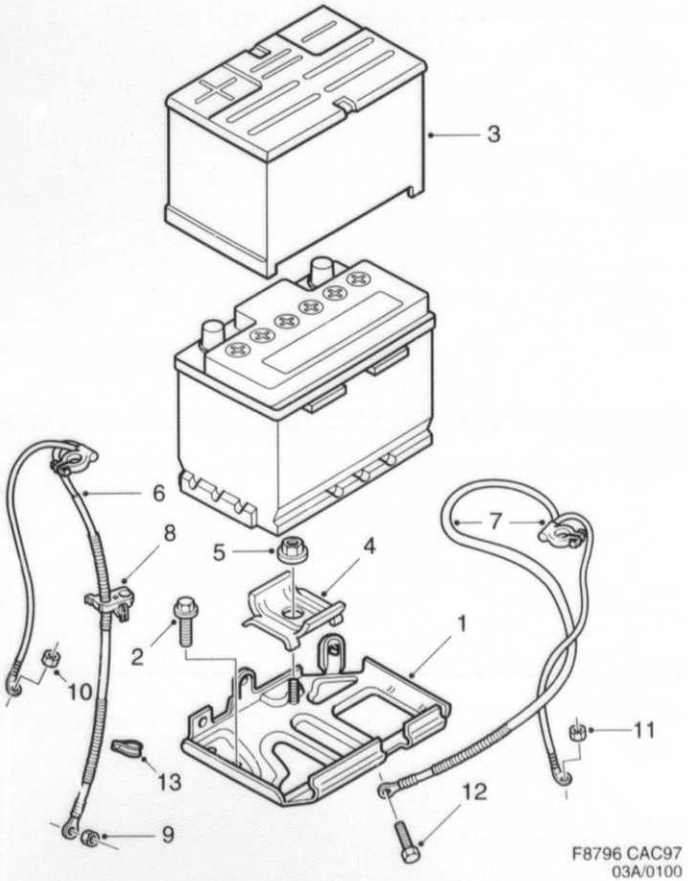

0100	Pos	Part No/Art nr	K S	Notes/Anmärkningar	Qty/ Antal	Description	Benämning	S L
0010						Battery	Batteri	
0020						SEE ACCESSORIES CATALOGUE	SE TILLBEHÖRSKATALOG	
0030	1	45 99 916			1	Battery shelf	Batterihylla	
0040	2	79 84 305			5	Hexagon screw	Sexkantsskruv	5
0050	3	49 46 844			1	Heat shield	Värmesköld	
0060	4	49 27 893			1	Brace	Bygel	4
0070	5	79 71 922			1	Nut	Mutter	3
0080	6	49 45 788		+	1	Battery cable	Batteriledning	
0090	7	49 43 809		-	1	Battery cable	Batteriledning	
0100	8	44 11 369			1	Clip	Clips	5
0110	9	79 77 911			1	Nut	Mutter	5
0120	10	79 77 952			1	Hexagon nut	Sexkantsmutter	5
0130	11	79 77 929			1	Nut	Mutter	5
0140	12	81 30 064			1	Screw	Skruv	5
0150	13	79 69 405			2	Clamp	Klammer	5

MASTER INDEX

0	General	1-A02
2	Engine	1-C02
3A	Electrical systems, instruments	1-F02
4	Transmission	1-I02
5	Brakes	1-K02
6	Front assembly, Steering	1-L02
7	Suspension, Wheels	2-A02
8A	Body, external	2-B02
8B	Body, internal	2-F02
8C	Body, heating and ventilation	2-H02
8D	Tool, Labels	2-I02
9	Accessories	2-J02
10	Numerical register	3-A02

3A GROUP INDEX

Battery	1-F06
Alternator	1-F08
Starter	1-F12
Ignition system	1-F14
Lighting	1-F16
Electrical equipment, other	1-G02
Wiring and fuses	1-G24
Complete sets	1-H22

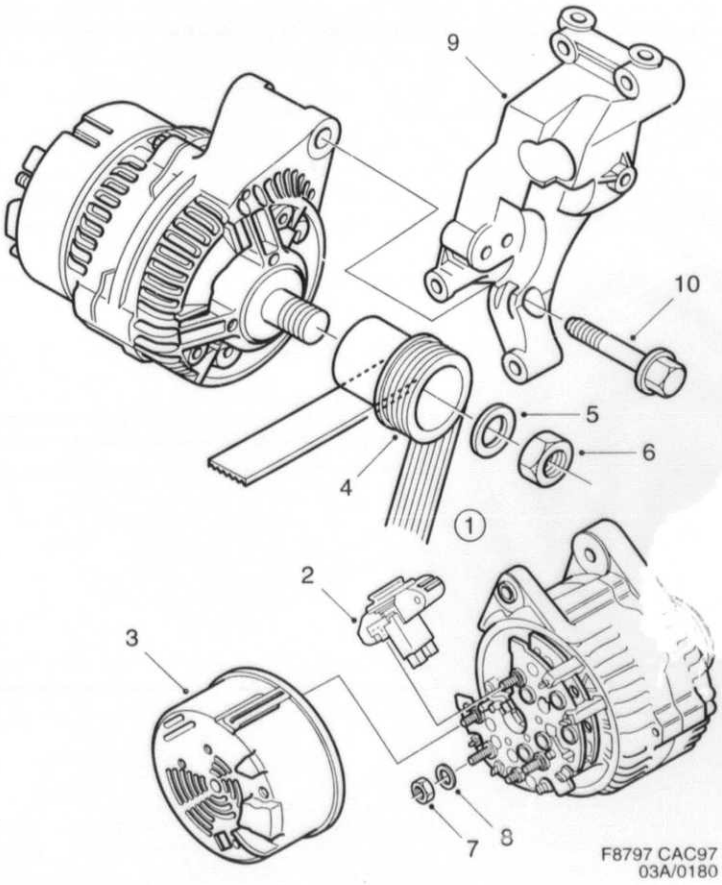

1-F08

Generator
Bosch 90A

Generator
Bosch 90A

0180	Pos	Part No/Art nr	K S	Notes/Anmärkningar	Qty/ Antal	Description	Benämning	S L
0010	1	47 34 018			1	Generator	Generator	5
0020	2	47 37 151			1	.Voltage regulator	.Spänningsregulator	2
0030	3	44 09 991			1	.Protection	.Skydd	6
0040	4	44 10 007			1	.Pulley	.Remskiva	5
0050	5	44 89 316			1	.Washer	.Bricka	5
0060	6	44 89 308			1	.Nut	.Mutter	5
0070	7	79 77 911			1	.Nut	.Mutter	5
0080	8	73 11 764			1	.Washer	.Bricka	5
0090	9	46 70 493			1	Bracket	Konsol	5
0100	10	80 98 378			2	Screw	Skruv	5

MASTER INDEX

0	General	1-A02
2	Engine	1-C02
3A	Electrical systems, instruments	1-F02
4	Transmission	1-I02
5	Brakes	1-K02
6	Front assembly, Steering	1-L02
7	Suspension, Wheels	2-A02
8A	Body, external	2-B02
8B	Body, internal	2-F02
8C	Body, heating and ventilation	2-H02
8D	Tool, Labels	2-I02
9	Accessories	2-J02
10	Numerical register	3-A02

3A GROUP INDEX

Battery	1-F06
Alternator	1-F08
Starter	1-F12
Ignition system	1-F14
Lighting	1-F16
Electrical equipment, other	1-G02
Wiring and fuses	1-G24
Complete sets	1-H22

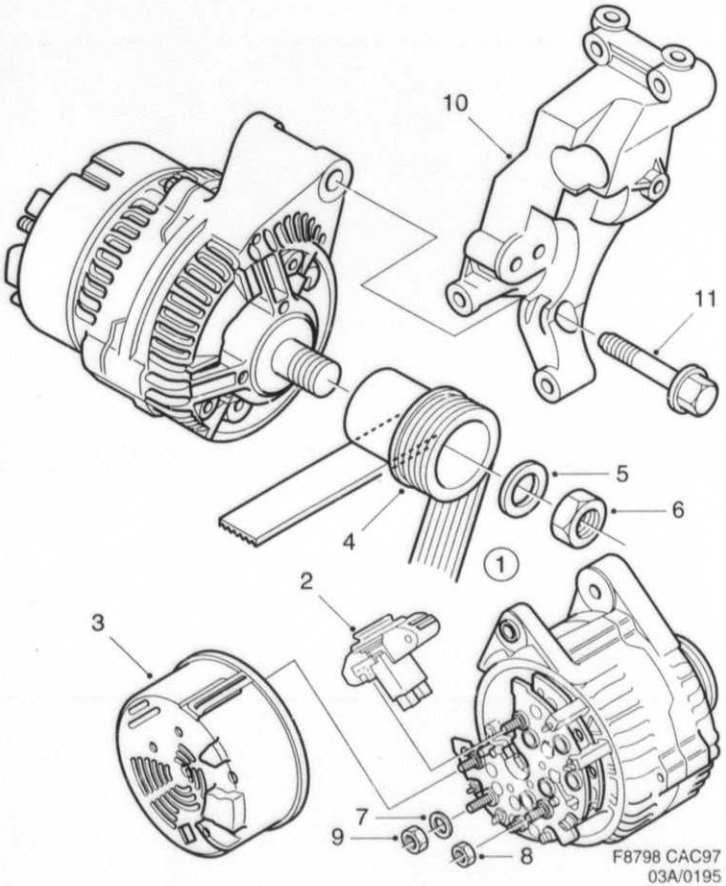

1-F10

Generator
Bosch 130A
4-cyl., AC/ACC

Generator
Bosch 130A
4-cyl., AC/ACC

0195	Pos	Part No/Art nr	K S	Notes/Anmärkningar	Qty/ Antal	Description	Benämning	S L
0010	1	49 41 761			1	Generator	Generator	5
0020	2	47 37 151			1	.Voltage regulator	.Spänningsregulator	2
0030	3	44 09 991			1	.Protection	.Skydd	6
0040	4	44 10 007			1	.Pulley	.Remskiva	5
0050	5	44 89 316			1	.Washer	.Bricka	5
0060	6	44 89 308			1	.Nut	.Mutter	5
0070	7	73 11 764			1	.Washer	.Bricka	5
0080	8	79 77 911			1	.Nut	.Mutter	5
0090	9	79 77 952			1	Hexagon nut	Sexkantsmutter	5
0100	10	46 70 493			1	Bracket	Konsol	5
0110	11	80 98 378			2	Screw	Skruv	5

MASTER INDEX

0	General	1-A02
2	Engine	1-C02
3A	Electrical systems, instruments	1-F02
4	Transmission	1-I02
5	Brakes	1-K02
6	Front assembly, Steering	1-L02
7	Suspension, Wheels	2-A02
8A	Body, external	2-B02
8B	Body, internal	2-F02
8C	Body, heating and ventilation	2-H02
8D	Tool, Labels	2-I02
9	Accessories	2-J02
10	Numerical register	3-A02

3A GROUP INDEX

Battery	1-F06
Alternator	1-F08
Starter	1-F12
Ignition system	1-F14
Lighting	1-F16
Electrical equipment, other	1-G02
Wiring and fuses	1-G24
Complete sets	1-H22

1-F12 Starter motor 4-cylinder / Startmotor 4-cylindrig

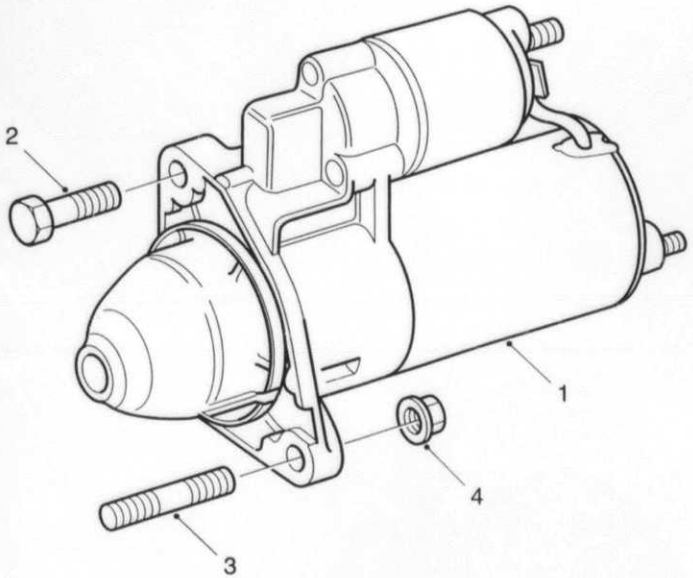

F8799 CAC97

0260	Pos	Part No/Art nr	K S	Notes/Anmärkningar	Qty/ Antal	Description	Benämning	S L
0010	1	46 70 428		7)	1	Starter motor	Startmotor	5
0020	2	79 84 297			1	Screw	Skruv	5
0030	3	79 71 112			1	Stud	Pinnskruv	5
0040	4	79 84 776			1	Nut	Mutter	5

7. Also available as exchange unit. Finns även som utbytesenhet.

MASTER INDEX

0	General	1-A02
2	Engine	1-C02
3A	Electrical systems, instruments	1-F02
4	Transmission	1-I02
5	Brakes	1-K02
6	Front assembly, Steering	1-L02
7	Suspension, Wheels	2-A02
8A	Body, external	2-B02
8B	Body, internal	2-F02
8C	Body, heating and ventilation	2-H02
8D	Tool, Labels	2-I02
9	Accessories	2-J02
10	Numerical register	3-A02

3A GROUP INDEX

Battery	1-F06
Alternator	1-F08
Starter	1-F12
Ignition system	1-F14
Lighting	1-F16
Electrical equipment, other	1-G02
Wiring and fuses	1-G24
Complete sets	1-H22

1-F14

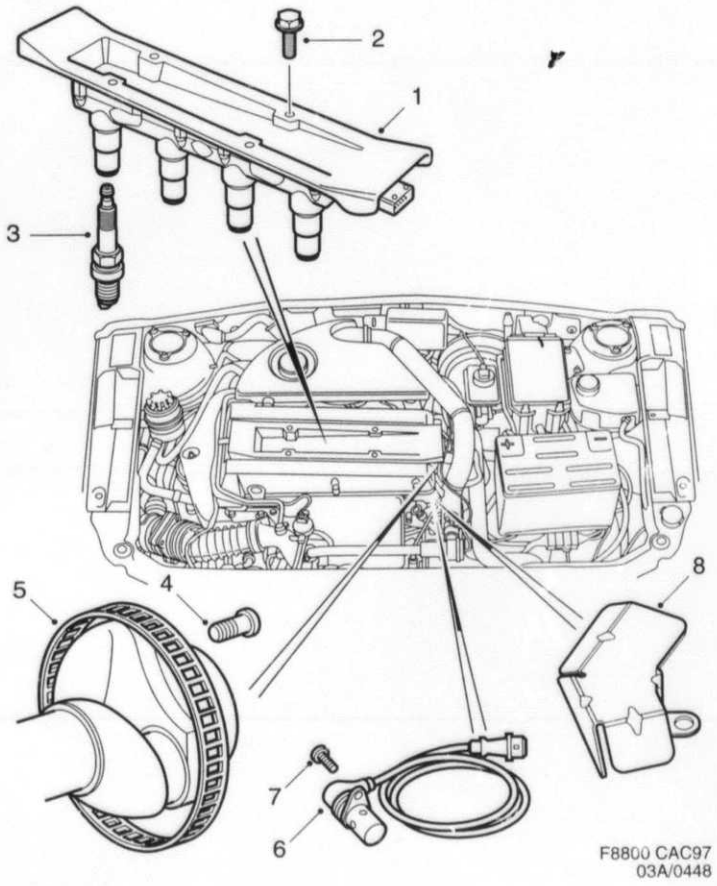

0448	Pos	Part No/Art nr	K S	Notes/Anmärkningar	Qty/ Antal	Description	Benämning	S L
0010	1	91 87 980			1	Ignition cassette	Tändkassett	8
0020	2	91 45 764			4	Screw	Skruv	5
0030	3	91 12 541		NGK BCPR7ES-1,1	4	Spark plug	Tändstift	8
0040								
0050	4	91 67 024			1	Aperture disc	Bländarskiva	4
0060	5	91 45 517			4	Screw	Skruv	5
0070								
0080	6	91 77 221			1	Cranks. position sensor	Lägesgivare	4
0090	7	80 59 552			1	Screw	Skruv	5
0100	8	91 81 355			1	Heat shield	Värmesköld	

MASTER INDEX

0	General	1-A02
2	Engine	1-C02
3A	Electrical systems, instruments	1-F02
4	Transmission	1-I02
5	Brakes	1-K02
6	Front assembly, Steering	1-L02
7	Suspension, Wheels	2-A02
8A	Body, external	2-B02
8B	Body, internal	2-F02
8C	Body, heating and ventilation	2-H02
8D	Tool, Labels	2-I02
9	Accessories	2-J02
10	Numerical register	3-A02

3A GROUP INDEX

Battery	1-F06
Alternator	1-F08
Starter	1-F12
Ignition system	1-F14
Lighting	1-F16
Electrical equipment, other	1-G02
Wiring and fuses	1-G24
Complete sets	1-H22

1-F16 Headlamp / Strålkastare

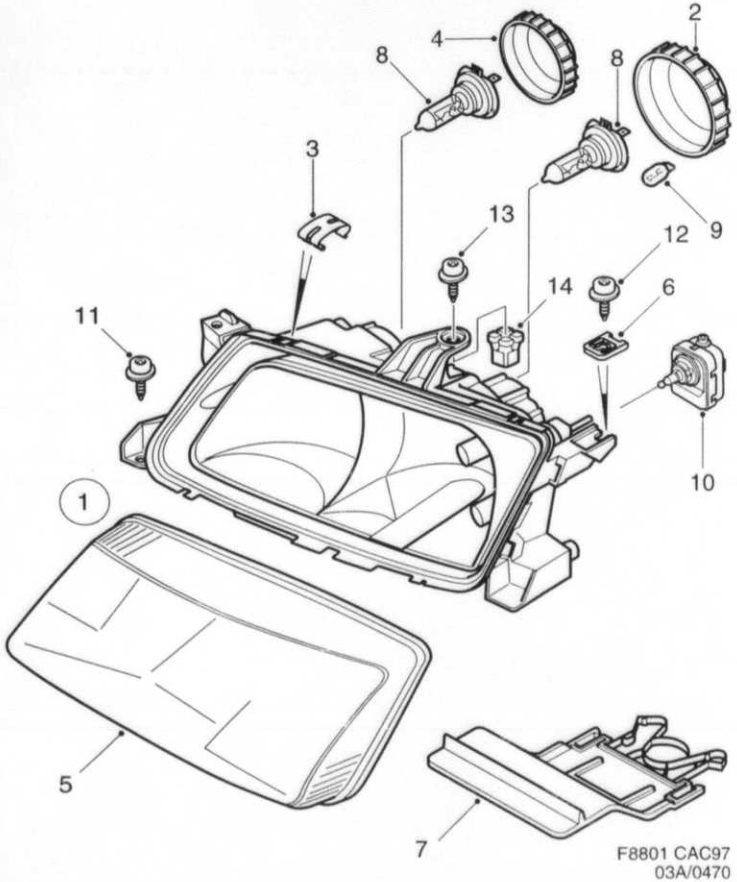

0470	Pos	Part No/Art nr	K S	Notes/Anmärkningar	Qty/ Antal	Description	Benämning	S L
0010	1	48 32 432		LH	1	Headlamp	Strålkastare	4
0020	1	48 32 440		RH	1	Headlamp	Strålkastare	4
0030	1	48 32 457		20), LH	1	Headlamp	Strålkastare	4
0040	1	48 32 465		20), RH	1	Headlamp	Strålkastare	4
0050	2	44 68 153			1	.Cover	.Kåpa	5
0060	3	44 68 179			6	.Clip	.Clips	5
0070	4	47 87 602			1	.Cover	.Kåpa	5
0080	5	47 87 610		LH	1	.Headlamp lens	.Strålkastarglas	2
0090	5	47 87 628		RH	1	.Headlamp lens	.Strålkastarglas	2
0100	5	47 87 636		20), LH	1	.Headlamp lens	.Strålkastarglas	2
0110	5	47 87 644		20), RH	1	.Headlamp lens	.Strålkastarglas	2
0120	6	47 87 727			1	.Clip	.Clips	5
0130	7	47 87 776		LH	1	.Stop	.Stopp	3
0140	7	47 87 784		RH	1	.Stop	.Stopp	3
0150	8	46 85 202			2	.Bulb	.Glödlampa	
0160	9	95 12 880			1	.Bulb	.Glödlampa	1
0170	10	47 87 792			2	Electric motor	Elmotor	3
0180	11	79 84 305			4	Hexagon screw	Sexkantsskruv	5
0190	12	79 85 690			2	Screw	Skruv	5
0200	13	79 85 690			2	Screw	Skruv	5
0210	14	79 82 655			2	Press nut	Pressmutter	5

20. For left hand traffic. För vänstertrafik.

MASTER INDEX

0	General	1-A02
2	Engine	1-C02
3A	Electrical systems, instruments	1-F02
4	Transmission	1-I02
5	Brakes	1-K02
6	Front assembly, Steering	1-L02
7	Suspension, Wheels	2-A02
8A	Body, external	2-B02
8B	Body, internal	2-F02
8C	Body, heating and ventilation	2-H02
8D	Tool, Labels	2-I02
9	Accessories	2-J02
10	Numerical register	3-A02

3A GROUP INDEX

Battery	1-F06
Alternator	1-F08
Starter	1-F12
Ignition system	1-F14
Lighting	1-F16
Electrical equipment, other	1-G02
Wiring and fuses	1-G24
Complete sets	1-H22

1-F18 Lamp cluster / Kombinationslykta

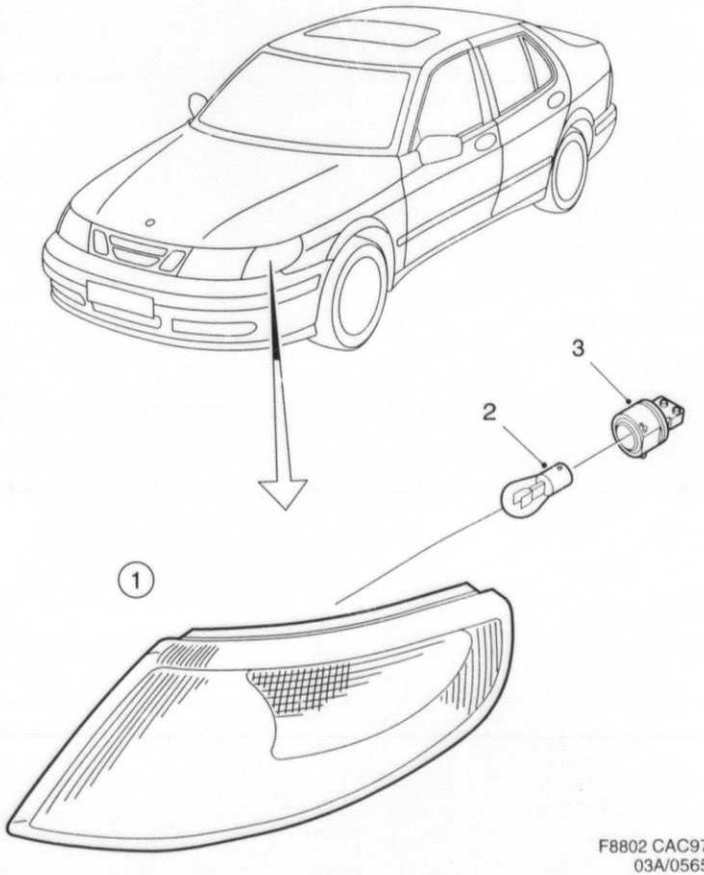

F8802 CAC97
03A/0565

0565	Pos	Part No/Art nr	K S	Notes/Anmärkningar	Qty/ Antal	Description	Benämning	S L
0010	1	49 12 515		LH	1	Direction indicator	Blinklykta	2
0020	1	49 12 523		RH	1	Direction indicator	Blinklykta	2
0030	2	44 68 930			1	.Bulb	.Glödlampa	1
0040	3	49 12 564			1	.Bulb socket 2-pole	.Lamphållare 2-polig	6
0050								

MASTER INDEX

0	General	1-A02
2	Engine	1-C02
3A	Electrical systems, instruments	1-F02
4	Transmission	1-I02
5	Brakes	1-K02
6	Front assembly, Steering	1-L02
7	Suspension, Wheels	2-A02
8A	Body, external	2-B02
8B	Body, internal	2-F02
8C	Body, heating and ventilation	2-H02
8D	Tool, Labels	2-I02
9	Accessories	2-J02
10	Numerical register	3-A02

3A GROUP INDEX

Battery	1-F06
Alternator	1-F08
Starter	1-F12
Ignition system	1-F14
Lighting	1-F16
Electrical equipment, other	1-G02
Wiring and fuses	1-G24
Complete sets	1-H22

1-F20 Fog light / Dimljus

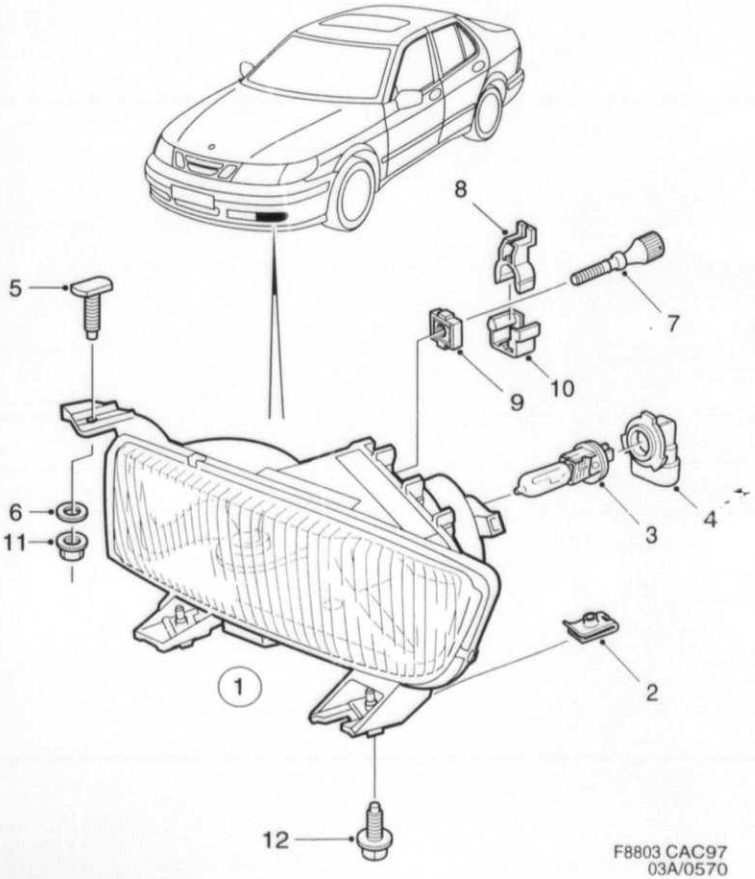

F8803 CAC97
03A/0570

0570	Pos	Part No/Art nr	K S	Notes/Anmärkningar	Qty/ Antal	Description	Benämning	S L
0010	1	45 60 835		LH	1	Fog light	Dimljus	4
0020	1	45 60 843		RH	1	Fog light	Dimljus	4
0030	2	43 41 095			2	.Clip nut	.Klämmutter	5
0040	3	46 85 301			1	.Bulb	.Glödlampa	3
0050	4	48 32 085			1	.Bulb socket	.Lamphållare	6
0060	5	45 96 979			1	.Screw	.Skruv	
0070	6	49 12 507			1	.Washer	.Bricka	
0080	7	49 12 457			1	.Adjustment screw	.Justerskruv	
0090	8	49 12 473			1	.Bushing	.Bussning	
0100	9	49 12 465			1	.Nut	.Mutter	
0110	10	49 12 481			1	.Clip	.Clips	
0120	11	49 19 056			1	Nut	Mutter	5
0130	12	79 78 109			2	Screw	Skruv	5

MASTER INDEX

0	General	1-A02
2	Engine	1-C02
3A	Electrical systems, instruments	1-F02
4	Transmission	1-I02
5	Brakes	1-K02
6	Front assembly, Steering	1-L02
7	Suspension, Wheels	2-A02
8A	Body, external	2-B02
8B	Body, internal	2-F02
8C	Body, heating and ventilation	2-H02
8D	Tool, Labels	2-I02
9	Accessories	2-J02
10	Numerical register	3-A02

3A GROUP INDEX

Battery	1-F06
Alternator	1-F08
Starter	1-F12
Ignition system	1-F14
Lighting	1-F16
Electrical equipment, other	1-G02
Wiring and fuses	1-G24
Complete sets	1-H22

1-F22 Tail lamp / Baklykta

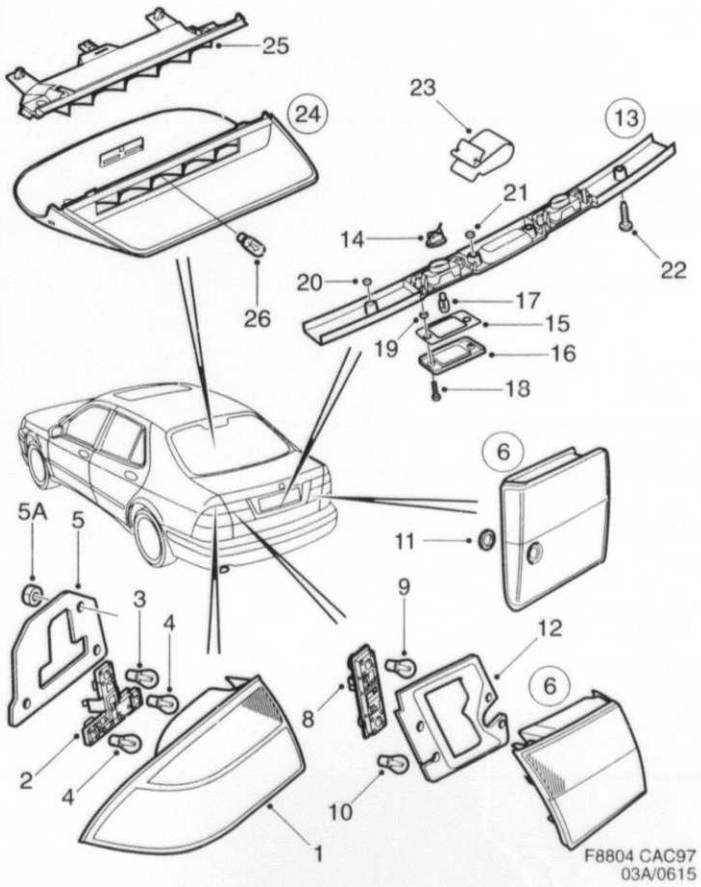

0615	Pos	Part No/Art nr	K S	Notes/Anmärkningar	Qty/ Antal	Description	Benämning	S L
0010	1	46 77 019		LH, EU, GB, AU, LA,ME,PA	1	Tail lamp	Baklykta	3
0020	1	46 77 027		RH, EU, GB, AU, LA,ME,PA	1	Tail lamp	Baklykta	3
0030	2	46 77 050		LH	1	Bulb socket	Lamphållare	5
0040	2	46 77 068		RH	1	Bulb socket	Lamphållare	5
0050	3	44 68 930			2	Bulb	Glödlampa	1
0060	4	85 32 756			4	Bulb	Glödlampa	1
0070	5	46 77 001			2	Seal	Tätning	
0080	5A	79 77 929			6	Nut	Mutter	5
0090								
0100	6	45 61 536		189), LHD, LH	1	Lamp	Lykta	3
0110	6	45 61 544		LHD, RH	1	Lamp	Lykta	3
0120	6	45 61 551		RHD, LH	1	Lamp	Lykta	3
0130	6	45 61 569		189), RHD, RH	1	Lamp	Lykta	3
0140	8	46 77 100			1	.Bulb socket	.Lamphållare	5
0150	9	71 54 719			1	.Bulb	.Glödlampa	1
0160	10	71 54 719		189)	1	.Bulb	.Glödlampa	1
0170	11	46 77 092		RH	1	.Sealing collar	.Tätningskrage	4
0180	12	46 77 159		LH	1	.Seal	.Tätning	5
0190	12	46 77 167		RH	1	.Seal	.Tätning	5
0200								
0210	13	45 61 577			1	Handle	Handtag	5
0220	14	48 31 236			2	.Bulb socket	.Lamphållare	
0230	15	48 31 301			2	.Seal	.Tätning	
0240	16	48 32 176			2	.Lens	.Glas	3
0250	17	95 12 880			2	.Bulb	.Glödlampa	1
0260	18	79 22 214			4	.Screw	.Skruv	5
0270	19	48 31 251			2	.Seal	.Tätning	5
0280	20	48 32 192			2	.Seal	.Tätning	5
0290	21	48 31 244			2	.Seal	.Tätning	5
0300	22	79 78 430			4	Screw	Skruv	
0310	23	79 51 783			1	Clamp	Klammer	5
0320								
0330	24	47 85 226			1	Stop light	Stopplykta	3
0340	25	48 32 267			1	.Bulb socket	.Lamphållare	3
0350	26	95 12 880			5	.Bulb	.Glödlampa	1

189. With rear fog light. Med dimbaklykta.

MASTER INDEX

0	General	1-A02
2	Engine	1-C02
3A	Electrical systems, instruments	1-F02
4	Transmission	1-I02
5	Brakes	1-K02
6	Front assembly, Steering	1-L02
7	Suspension, Wheels	2-A02
8A	Body, external	2-B02
8B	Body, internal	2-F02
8C	Body, heating and ventilation	2-H02
8D	Tool, Labels	2-I02
9	Accessories	2-J02
10	Numerical register	3-A02

3A GROUP INDEX

Battery	1-F06
Alternator	1-F08
Starter	1-F12
Ignition system	1-F14
Lighting	1-F16
Electrical equipment, other	1-G02
Wiring and fuses	1-G24
Complete sets	1-H22

1-F24

Other lights

Övrig belysning

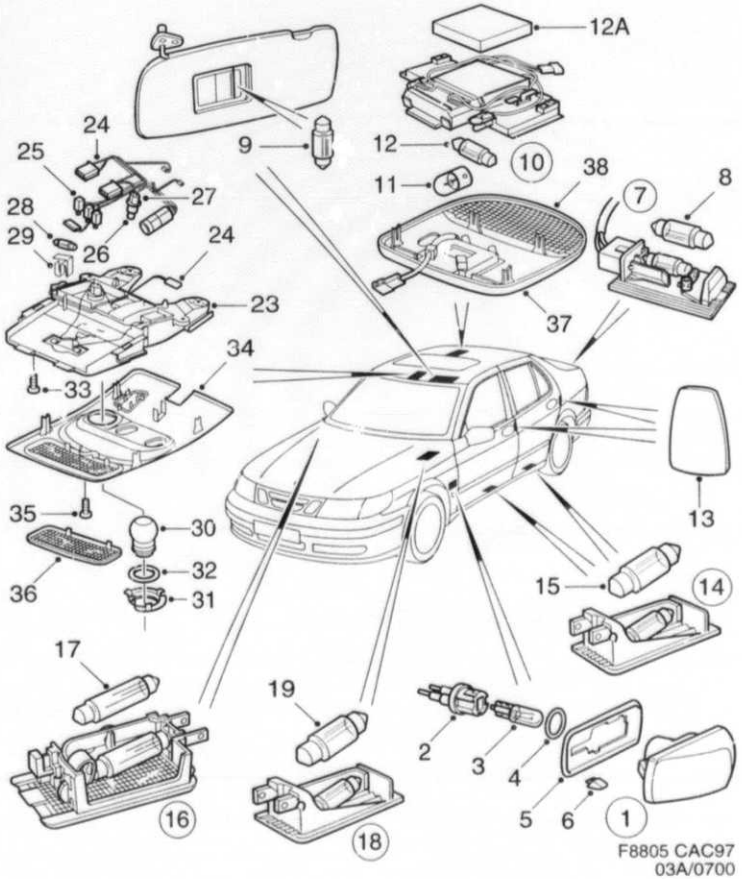

F8805 CAC97
03A/0700

0700	Pos	Part No/Art nr	K S	Notes/Anmärkningar	Qty/ Antal	Description	Benämning	S L
0010	1	91 24 132			2	Side light	Sidolampa	3
0020	2	95 21 857			1	.Bulb socket	.Lamphållare	6
0030	3	95 12 880		40/238 300 008	1	.Bulb	.Glödlampa	1
0040	4	44 84 259			1	.Gasket	.Packning	6
0050	5	91 24 140			1	.Seal	.Tätning	6
0060	6	48 30 113			1	.Clip	.Clips	
0070								
0080	7	47 40 494			1	Lamp	Lampa	4
0090						boot	bagagerum	
0100	8	85 01 264			1	.Bulb	.Glödlampa	2
0110								
0120	9	44 86 684			2	Bulb	Glödlampa	3
0130						sun visor	solskydd	
0140								
0150	10	46 03 486			1	Dome lamp	Taklampa	4
0160	11	71 57 308			2	.Bulb	.Glödlampa	3
0170	12	85 01 264			1	.Bulb	.Glödlampa	2
0180	12A	47 90 697		10 MM	1	Spacer	Distans	
0190	12A	47 90 705		SR, 5,5 MM	1	Spacer	Distans	
0200								
0210	13	44 71 082			4	Reflex	Reflex	
0220								
0230	14	47 40 494			4	Lamp	Lampa	4
0240						courtesy lamp	instegslampa	
0250	15	85 01 264			1	.Bulb	.Glödlampa	2
0260	15A	47 40 437			4	Cover	Täcklock	
0270						grey	grå	
0280	15A	47 40 445			4	Cover	Täcklock	
0290						beige	beige	
0300								
0310	16	42 02 107			1	Lamp	Lampa	4
0320						glove compartment	handskfack	
0330	17	85 01 264			1	.Bulb	.Glödlampa	2
0340								
0350	18	47 40 494		2)	2	Lamp	Lampa	4
0360						floor light	golvbelysning	
0370	19	85 01 264			1	.Bulb	.Glödlampa	2
0380								
0390	23	46 42 708			1	Roof bracket	Takkonsol	
0400	24	47 05 885			1	Cable harness	Ledningsnät	
0410	25	85 00 613			3	Bulb	Glödlampa	2
0420	26	95 06 080			1	Bulb	Glödlampa	2
0430	27	47 92 446			1	Bulb socket	Lamphållare	
0440	28	85 01 264			1	Bulb	Glödlampa	2
0450	29	47 05 802			2	Contact spring	Kontaktfjäder	
0460	30	95 04 556			1	Spotlight	Spotlight	
0470	31	47 90 689			1	Clamping ring	Klämring	
0480	32	97 65 520			1	Felt ring	Filtring	
0490	33	79 22 370			4	Screw	Skruv	5
0500	34	46 03 403			1	Cover	Kåpa	
0510	34	46 39 316		SR	1	Cover	Kåpa	
0520	35	79 22 354			1	Screw	Skruv	5
0530	36	46 42 542			1	Lens	Lins	
0540	37	49 35 318			1	Sensor	Sensor	5
0550	37	50 01 045		31)	1	Sensor	Sensor	5
0560	38	46 42 559			1	Lamp lens	Lampglas	4

2. Front. Främre.
31. For cars with leather covers. För bilar med läderklädsel.

MASTER INDEX

0	General	1-A02
2	Engine	1-C02
3A	Electrical systems, instruments	1-F02
4	Transmission	1-I02
5	Brakes	1-K02
6	Front assembly, Steering	1-L02
7	Suspension, Wheels	2-A02
8A	Body, external	2-B02
8B	Body, internal	2-F02
8C	Body, heating and ventilation	2-H02
8D	Tool, Labels	2-I02
9	Accessories	2-J02
10	Numerical register	3-A02

3A GROUP INDEX

Battery	1-F06
Alternator	1-F08
Starter	1-F12
Ignition system	1-F14
Lighting	1-F16
Electrical equipment, other	1-G02
Wiring and fuses	1-G24
Complete sets	1-H22

1-G02

Horn

Signalhorn

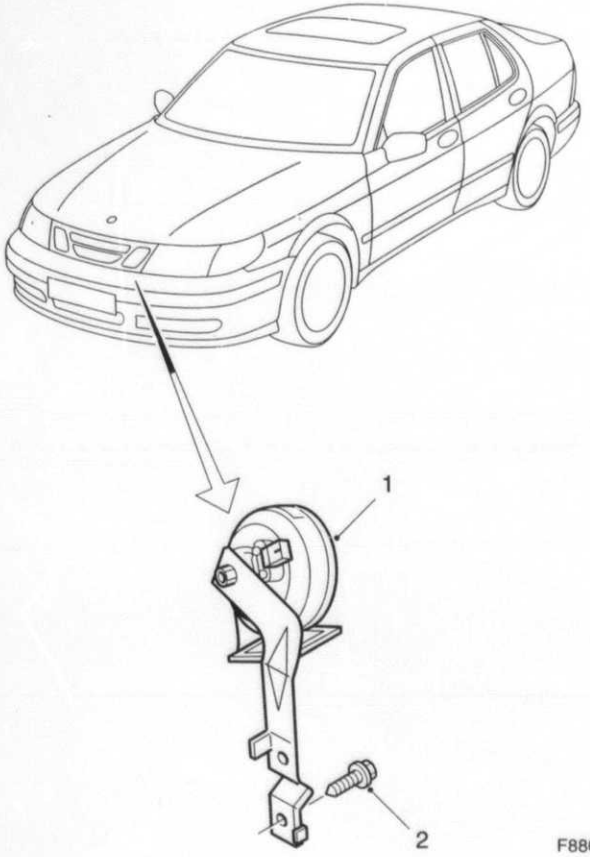

F8806 CAC97
03A/0750

0750	Pos	Part No/Art nr	K S	Notes/Anmärkningar	Qty/ Antal	Description	Benämning	S L
0010	1	45 63 219		LH	1	Horn	Signalhorn	4
0020	1	45 63 227		RH	1	Horn	Signalhorn	4
0030	2	79 78 182			2	Screw	Skruv	5

MASTER INDEX

0	General	1-A02
2	Engine	1-C02
3A	Electrical systems, instruments	1-F02
4	Transmission	1-I02
5	Brakes	1-K02
6	Front assembly, Steering	1-L02
7	Suspension, Wheels	2-A02
8A	Body, external	2-B02
8B	Body, internal	2-F02
8C	Body, heating and ventilation	2-H02
8D	Tool, Labels	2-I02
9	Accessories	2-J02
10	Numerical register	3-A02

3A GROUP INDEX

Battery	1-F06
Alternator	1-F08
Starter	1-F12
Ignition system	1-F14
Lighting	1-F16
Electrical equipment, other	1-G02
Wiring and fuses	1-G24
Complete sets	1-H22

1-G04 Windscreen wiper / Vindrutetorkare

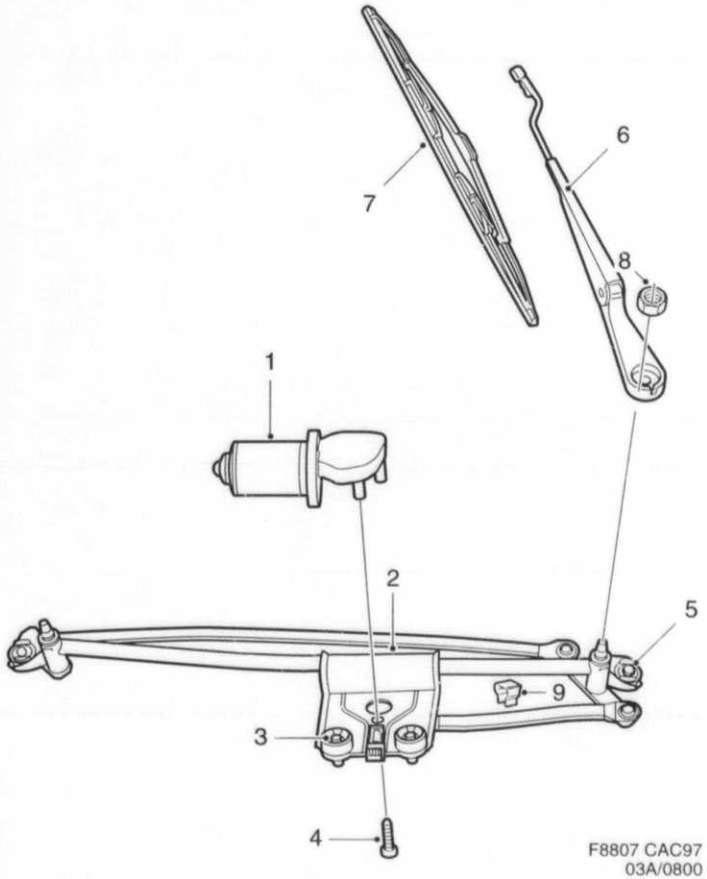

0800	Pos	Part No/Art nr	K S	Notes/Anmärkningar	Qty/ Antal	Description	Benämning	S L
0010	1	48 32 333		LHD	1	Electric motor	Elmotor	
0020	1	48 32 325		RHD	1	Electric motor	Elmotor	
0030	2	48 32 317		LHD	1	Spindle frame	Spindelram	6
0040	2	48 32 309		RHD	1	Spindle frame	Spindelram	6
0050	3	48 32 341		LHD	2	Hexagon screw	Sexkantsskruv	
0060	3	45 24 260		RHD	2	Hexagon screw	Sexkantsskruv	
0070	4	47 85 283			3	Hexagon screw	Sexkantsskruv	
0080	5	48 32 341			2	Hexagon screw	Sexkantsskruv	
0090	6	48 32 358		LHD, LH	1	Wiper arm	Torkararm	
0100	6	48 32 374		LHD, RH	1	Wiper arm	Torkararm	
0110	6	48 32 382		RHD, LH	1	Wiper arm	Torkararm	
0120	6	48 32 366		RHD, RH	1	Wiper arm	Torkararm	
0130	7	48 32 390		LHD, LH	1	Wiper blade	Torkarblad	
0140	7	48 32 416		LHD, RH	1	Wiper blade	Torkarblad	
0150	7	48 32 424		RHD, LH	1	Wiper blade	Torkarblad	
0160	7	48 32 408		RHD, RH	1	Wiper blade	Torkarblad	
0170	8	49 40 342			2	Nut	Mutter	5
0180	9	49 14 982		RHD	1	Water drainage	Vattenavledare	

MASTER INDEX

0	General	1-A02
2	Engine	1-C02
3A	Electrical systems, instruments	1-F02
4	Transmission	1-I02
5	Brakes	1-K02
6	Front assembly, Steering	1-L02
7	Suspension, Wheels	2-A02
8A	Body, external	2-B02
8B	Body, internal	2-F02
8C	Body, heating and ventilation	2-H02
8D	Tool, Labels	2-I02
9	Accessories	2-J02
10	Numerical register	3-A02

3A GROUP INDEX

Battery	1-F06
Alternator	1-F08
Starter	1-F12
Ignition system	1-F14
Lighting	1-F16
Electrical equipment, other	1-G02
Wiring and fuses	1-G24
Complete sets	1-H22

1-G06 Headlamp wiper / Strålkastartorkare

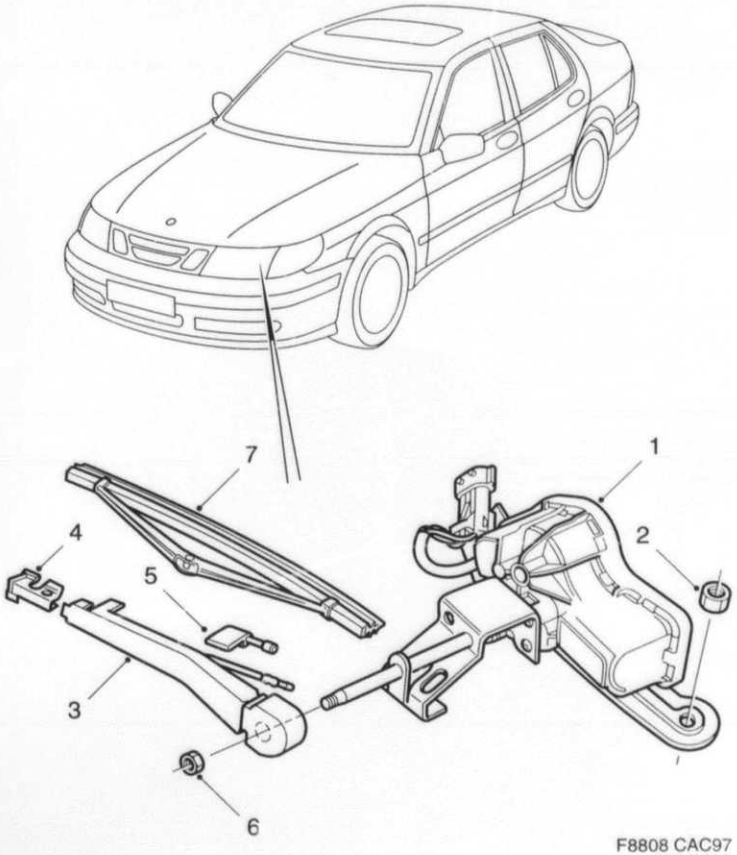

F8808 CAC97
03A/0850

0850	Pos	Part No/Art nr	K S	Notes/Anmärkningar	Qty/ Antal	Description	Benämning	S L
0010	1	45 60 694		LH	1	Wiper motor	Torkarmotor	3
0020	1	45 60 702		RH	1	Wiper motor	Torkarmotor	3
0035	2	79 85 377			4	Nut	Mutter	5
0040	3	45 63 276		LH	1	Wiper arm	Torkararm	4
0050	3	45 63 284		RH	1	Wiper arm	Torkararm	4
0060	4	95 58 149			1	.Adapter	.Adapter	5
0070	5	48 32 952		LH	1	.Nozzle	.Munstycke	2
0080	5	48 32 945		RH	1	.Nozzle	.Munstycke	2
0090	6	79 77 911			2	Nut	Mutter	5
0100	7	85 49 172			2	Wiper blade	Torkarblad	2

MASTER INDEX

0	General	1-A02
2	Engine	1-C02
3A	Electrical systems, instruments	1-F02
4	Transmission	1-I02
5	Brakes	1-K02
6	Front assembly, Steering	1-L02
7	Suspension, Wheels	2-A02
8A	Body, external	2-B02
8B	Body, internal	2-F02
8C	Body, heating and ventilation	2-H02
8D	Tool, Labels	2-I02
9	Accessories	2-J02
10	Numerical register	3-A02

3A GROUP INDEX

Battery	1-F06
Alternator	1-F08
Starter	1-F12
Ignition system	1-F14
Lighting	1-F16
Electrical equipment, other	1-G02
Wiring and fuses	1-G24
Complete sets	1-H22

Electric equipment, other — Övr. elektrisk utrustning

1-G08 Washer unit — Spolaranläggning

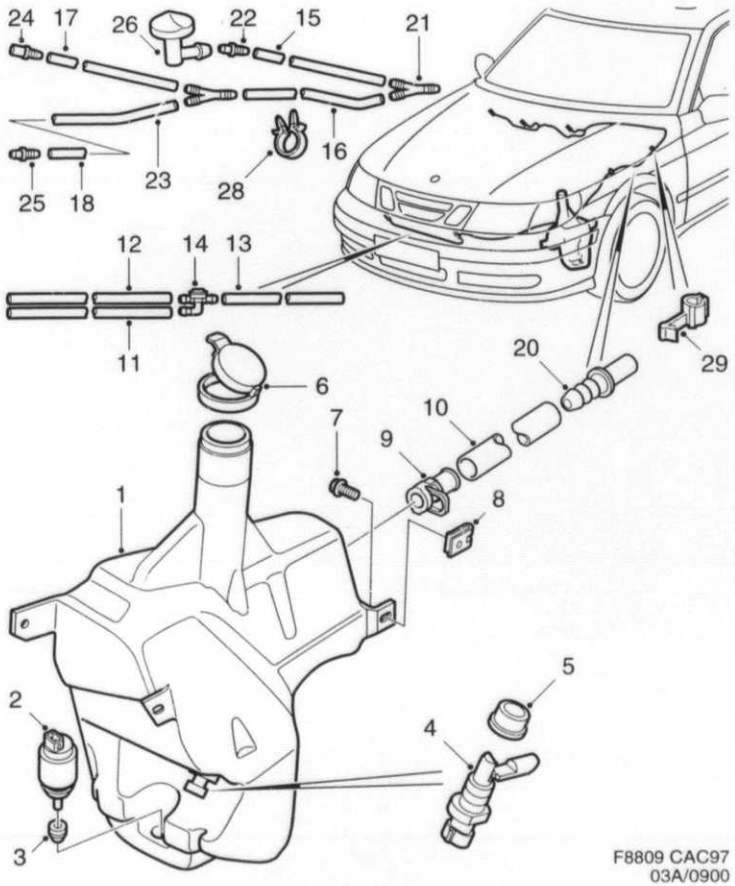

F8809 CAC97
03A/0900

0900	Pos	Part No/Art nr	K S	Notes/Anmärkningar	Qty/ Antal	Description	Benämning	S L
0010	1	47 85 275		105)	1	Washer fluid reservoir	Spolarburk	
0020	1	45 63 300			1	Washer fluid reservoir	Spolarburk	
0030	2	48 32 911		105)	1	Washer pump	Spolarpump	2
0040	2	48 32 895			1	Washer pump	Spolarpump	2
0050	3	48 32 929		105)	1	Bushing	Bussning	3
0060	3	95 07 617			1	Bushing	Bussning	3
0070	4	42 40 792			1	Level guard	Nivåvakt	5
0080	5	42 40 800			1	Bushing	Bussning	3
0090	6	45 63 292			1	Cover	Lock	2
0100	7	79 78 679			3	Hexagon screw	Sexkantsskruv	
0110	8	73 99 181			1	Clip	Clips	5
0120								
0130	9	48 32 986			1	Junction pipe	Skarvrör	
0140	10	85 49 420		L=1880 MM	1	Hose	Slang	
0150	11	85 49 420		L=1480 MM	1	Hose	Slang	
0160	12	85 49 420		L=440 MM	1	Hose	Slang	
0170	13	85 49 420		L=490 MM	1	Hose	Slang	
0180	15	85 49 420		L=40 MM	1	Hose	Slang	
0190	16	85 49 420		L=220 MM	1	Hose	Slang	
0200	17	85 49 420		L=155 MM	1	Hose	Slang	
0210	18	85 49 420		L=505 MM	1	Hose	Slang	
0220								
0230	19	48 32 754			1	Junction pipe	Skarvrör	
0240	21	48 32 812			1	Tube	Rör	2
0250	22	48 32 754			1	Junction pipe	Skarvrör	
0260	23	48 32 812			1	Tube	Rör	2
0270	24	48 32 754			1	Junction pipe	Skarvrör	
0280	25	48 32 754			1	Junction pipe	Skarvrör	
0290	26	45 63 045			3	Nozzle	Munstycke	
0300	27	49 13 745			1	Valve	Ventil	
0310	28	85 30 917			2	Clip	Clips	5
0320	29	45 64 829			1	Clip	Clips	
0330						bonnet hinge	huvgångjärn	
0340								
0350		85 49 420		L=5000 MM	X	Hose	Slang	

105. For cars without headlight wipers. För bilar utan strålkastartorkare.

MASTER INDEX

0	General	1-A02
2	Engine	1-C02
3A	Electrical systems, instruments	1-F02
4	Transmission	1-I02
5	Brakes	1-K02
6	Front assembly, Steering	1-L02
7	Suspension, Wheels	2-A02
8A	Body, external	2-B02
8B	Body, internal	2-F02
8C	Body, heating and ventilation	2-H02
8D	Tool, Labels	2-I02
9	Accessories	2-J02
10	Numerical register	3-A02

3A GROUP INDEX

Battery	1-F06
Alternator	1-F08
Starter	1-F12
Ignition system	1-F14
Lighting	1-F16
Electrical equipment, other	1-G02
Wiring and fuses	1-G24
Complete sets	1-H22

1-G10

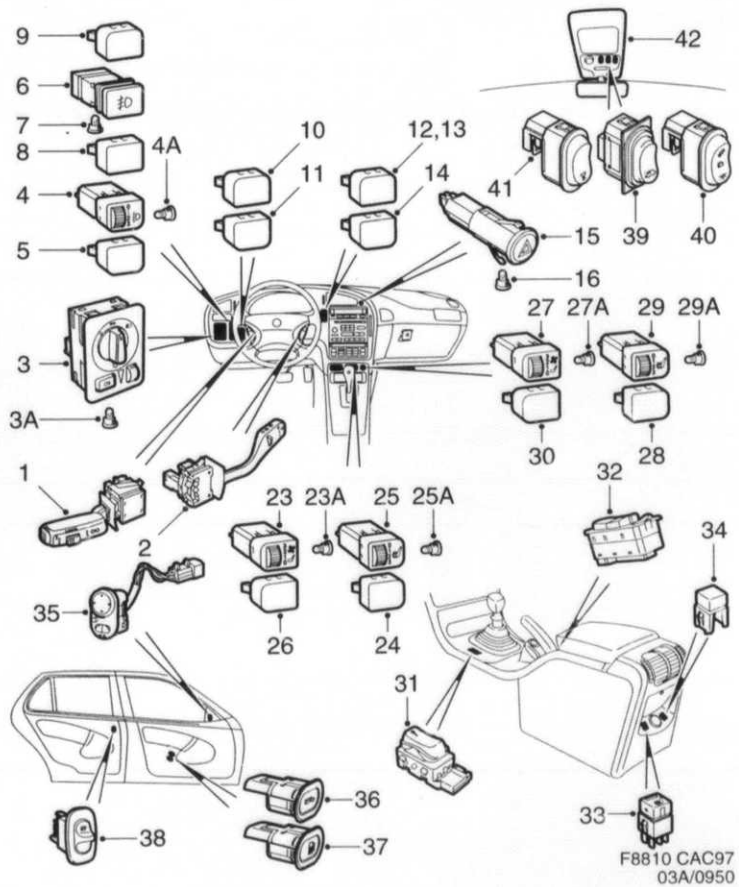

0950	Pos	Part No/Art nr	K S	Notes/Anmärkningar	Qty/ Antal	Description	Benämning	S L
0010	1	47 39 488			1	Switch	Strömställare	2
0020						direction indicator	blinkers	
0030	1	48 05 008		30)	1	Switch	Strömställare	2
0040						direction indicator	blinkers	
0050	2	46 16 132			1	Switch	Strömställare	2
0060						windscreen wiper	vindrutetorkare	
0070								
0080	3	46 16 124			1	Switch	Strömställare	3
0090						lighting	belysning	
0100	3A	44 66 439			2	.Bulb	.Glödlampa	4
0110								
0120	4	46 16 520			1	Switch	Strömställare	3
0130						headlamp levelling	ljuslängdsreglering	
0140	4A	49 29 311			2	.Bulb	.Glödlampa	4
0150	5	44 09 264			1	Button	Knapp	5
0160						blind knob	blindknapp	
0170								
0180	6	44 09 223			1	Switch	Strömställare	3
0190						front fog light	dimstrålkastare	
0200	7	44 66 439			1	.Bulb	.Glödlampa	4
0210	8	44 09 272			1	Button	Knapp	5
0220						blind knob	blindknapp	
0230								
0240	9	44 09 264			1	Button	Knapp	5
0250						blind knob	blindknapp	
0260								
0270	10	44 09 264			1	Button	Knapp	5
0280						blind knob	blindknapp	
0290								
0300	11	44 09 264			1	Button	Knapp	5
0310						blind knob	blindknapp	
0320								
0330	12	46 94 303		TCS	1	Switch	Strömställare	3
0340								
0350	13	44 09 264			1	Button	Knapp	5
0360						blind knob	blindknapp	
0370								
0380	14	44 09 264			1	Button	Knapp	5
0390						blind knob	blindknapp	
0400								
0410	15	41 09 526			1	Switch	Strömställare	4
0420						warning flasher	varningsblinklykta	
0430	16	41 14 898			1	.Bulb	.Glödlampa	4
0440								
0510	23	46 16 504			1	Switch	Strömställare	3
0520						seat ventilation	stolventilation	
0530	23A	49 29 311			1	.Bulb	.Glödlampa	4
0540								
0550	24	44 09 280			1	Button	Knapp	5
0560						blind knob	blindknapp	
0570								
0580	25	44 09 249			1	Switch	Strömställare	3
0590						heating pad	värmedyna	
0600	25A	49 29 311			1	.Bulb	.Glödlampa	4
0610								
0620	26	44 09 280			1	Button	Knapp	5
0630						blind knob	blindknapp	
0640								
0650	27	46 16 504			1	Switch	Strömställare	3
0660						seat ventilation	stolventilation	
0670	27A	49 29 311			1	.Bulb	.Glödlampa	4
0680								

30. With speed control system. Med fartkontrollsystem.

MASTER INDEX

0	General	1-A02
2	Engine	1-C02
3A	Electrical systems, instruments	1-F02
4	Transmission	1-I02
5	Brakes	1-K02
6	Front assembly, Steering	1-L02
7	Suspension, Wheels	2-A02
8A	Body, external	2-B02
8B	Body, internal	2-F02
8C	Body, heating and ventilation	2-H02
8D	Tool, Labels	2-I02
9	Accessories	2-J02
10	Numerical register	3-A02

3A GROUP INDEX

Battery	1-F06
Alternator	1-F08
Starter	1-F12
Ignition system	1-F14
Lighting	1-F16
Electrical equipment, other	1-G02
Wiring and fuses	1-G24
Complete sets	1-H22

1-G12 Switch / Strömställare

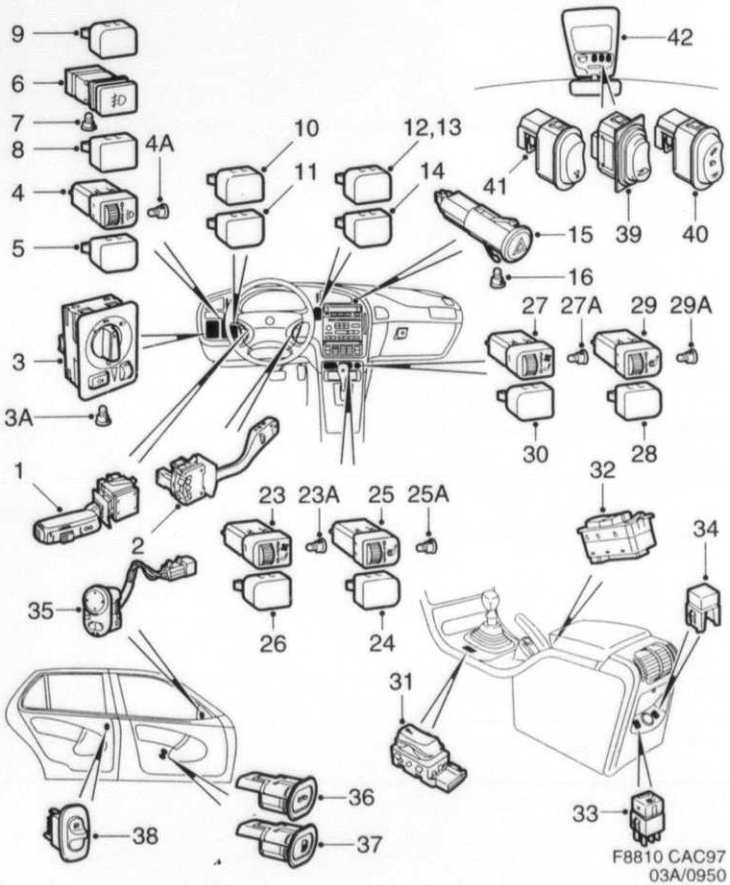

0950	Pos	Part No/Art nr	K S	Notes/Anmärkningar	Qty/ Antal	Description	Benämning	S L
0690	28	44 09 280			1	Button	Knapp	5
0700						blind knob	blindknapp	
0710								
0720	29	46 16 108			1	Switch	Strömställare	3
0730						heating pad	värmedyna	
0740	29A	49 29 311			1	.Bulb	.Glödlampa	4
0750								
0760	30	44 09 280			1	Button	Knapp	5
0770						blind knob	blindknapp	
0780								
0790	31	46 17 593			1	Switch	Strömställare	3
0800						central lock	centrallås	
0810	31A	49 29 287			1	.Bulb	.Glödlampa	4
0820								
0830	32	46 16 082			1	Switch	Strömställare	3
0840						window lift	fönsterhiss	
0850	32A	49 29 303			1	.Bulb	.Glödlampa	4
0860								
0870	33	42 22 493		3)	1	Switch	Strömställare	3
0880						heating pad	värmedyna	
0890								
0900	34	42 23 426			1	Button	Knapp	5
0910						blind knob	blindknapp	
0920								
0930	35	44 66 405		LHD, EM	1	Switch	Strömställare	3
0940	35	*44 12 631*		102), LHD, EM	1	Switch	Strömställare	3
0950								
0960	35	44 66 413		RHD, EM	1	Switch	Strömställare	3
0970	35	*44 12 649*		102), RHD, EM	1	Switch	Strömställare	3
0980								
0990	36	47 33 440		LHD	1	Switch	Strömställare	
1000						luggage compartment lock	bagagerumslås	
1010	36	47 33 457		RHD	1	Switch	Strömställare	
1020						luggage compartment lock	bagagerumslås	
1030								
1040	37	46 17 544			1	Switch	Strömställare	5
1050						tank hatch	tanklucka	
1060								
1070	38	49 27 547		3)	2	Switch	Strömställare	3
1080						window lift	fönsterhiss	
1090						grey	grå	
1100	38	49 27 554		3)	2	Switch	Strömställare	3
1110						window lift	fönsterhiss	
1120						beige	beige	
1130								
1140	39	46 16 090			1	Switch	Strömställare	3
1150						sun roof	soltak	
1160								
1170	40	46 16 058			1	Switch	Strömställare	3
1180						interior illum.	innerbelysning	
1190								
1200	41	46 17 536			1	Switch	Strömställare	5
1210						reading lamp	läslampa	
1220								
1230	42			See page 3A-023, 1-F24		Roof bracket	Takkonsol	

3. Rear. Bakre.
102. With memory function. Med minnesfunktion.

MASTER INDEX

0	General	1-A02
2	Engine	1-C02
3A	Electrical systems, instruments	1-F02
4	Transmission	1-I02
5	Brakes	1-K02
6	Front assembly, Steering	1-L02
7	Suspension, Wheels	2-A02
8A	Body, external	2-B02
8B	Body, internal	2-F02
8C	Body, heating and ventilation	2-H02
8D	Tool, Labels	2-I02
9	Accessories	2-J02
10	Numerical register	3-A02

3A GROUP INDEX

Battery	1-F06
Alternator	1-F08
Starter	1-F12
Ignition system	1-F14
Lighting	1-F16
Electrical equipment, other	1-G02
Wiring and fuses	1-G24
Complete sets	1-H22

1-G14 Actuator — Manöverdon

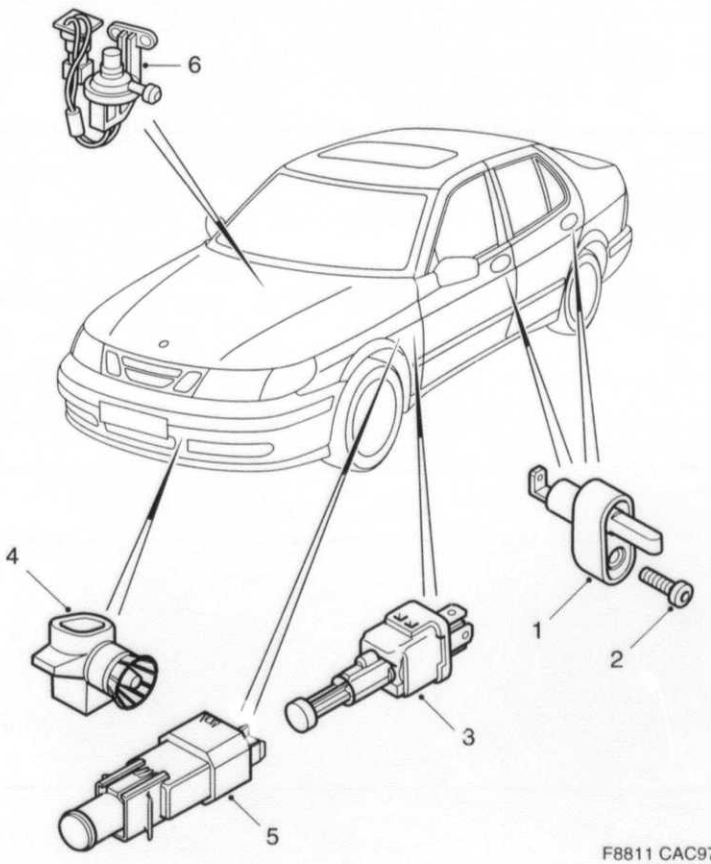

F8811 CAC97
03A/1000

1000	Pos	Part No/Art nr	K S	Notes/Anmärkningar	Qty/ Antal	Description	Benämning	S L
0010	1	44 08 423			4	Contact	Kontakt	3
0020						door	dörr	
0030	2	79 85 955			4	Screw	Skruv	
0040								
0050	3	46 17 551		M	1	Brake light switch	Bromsljuskontakt	3
0051	3	42 33 342		A	1	Brake light switch	Bromsljuskontakt	3
0060								
0070	4	46 16 173			1	Sensor	Givare	4
0080						outer temp	yttertemp	
0090								
0100	5	48 09 166		30), M	1	Pedel contact	Pedalkontakt	
0110						clutch	koppling	
0120								
0130	6	46 92 802		4-CYL, A	1	Pressure monitor	Tryckvakt	
0140						vacuum pump	vakuumpump	

30. With speed control system. Med fartkontrollsystem.

MASTER INDEX

0	General	1-A02
2	Engine	1-C02
3A	Electrical systems, instruments	1-F02
4	Transmission	1-I02
5	Brakes	1-K02
6	Front assembly, Steering	1-L02
7	Suspension, Wheels	2-A02
8A	Body, external	2-B02
8B	Body, internal	2-F02
8C	Body, heating and ventilation	2-H02
8D	Tool, Labels	2-I02
9	Accessories	2-J02
10	Numerical register	3-A02

3A GROUP INDEX

Battery	1-F06
Alternator	1-F08
Starter	1-F12
Ignition system	1-F14
Lighting	1-F16
Electrical equipment, other	1-G02
Wiring and fuses	1-G24
Complete sets	1-H22

1-G16 Audio system — Ljudsystem

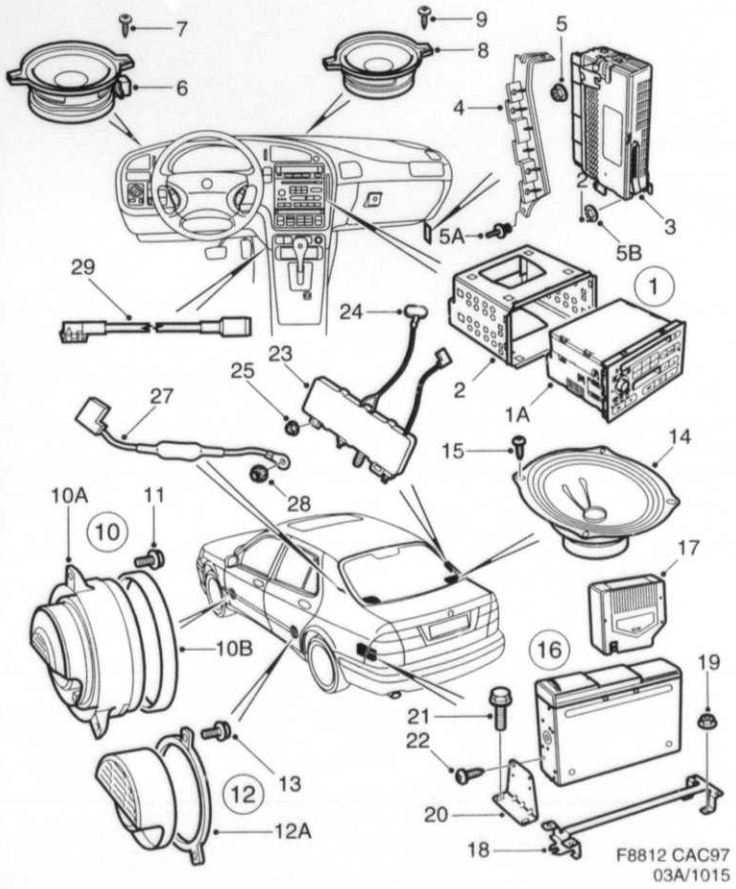

1015	Pos	Part No/Art nr	K S	Notes/Anmärkningar	Qty/ Antal	Description	Benämning	S L
0010	1	46 16 868		EU	1	Radio	Radio	5
0020	1	46 16 942		PA	1	Radio	Radio	5
0030	1	46 16 918		JP	1	Radio	Radio	5
0040	1A	47 14 739		EU	1	.Front panel	.Frontpanel	
0050	1A	47 14 762		PA	1	.Front panel	.Frontpanel	
0060	1A	47 14 754		JP	1	.Front panel	.Frontpanel	
0070	2	46 16 009			1	Cage	Korg	5
0080								
0090	3	46 17 163		100)	1	Amplifier	Förstärkare	5
0100	3	46 17 171		101)	1	Amplifier	Förstärkare	5
0110	4	47 36 914			1	Bracket	Konsol	
0120	5	79 74 298			1	Nut	Mutter	5
0130	5A	95 65 417			1	Rivet	Nit	3
0140	5B	40 87 128			2	Plastic nut	Plastmutter	5
0150								
0160	6	46 16 850		100)	2	Loudspeaker	Högtalare	
0170						instrument panel	instrumentpanel	
0180	6	46 16 967		101)	2	Loudspeaker	Högtalare	
0190						instrument panel	instrumentpanel	
0200	7	79 22 354			4	Screw	Skruv	5
0210								
0220	8	46 17 049		100)	1	Loudspeaker	Högtalare	
0230						instrument panel	instrumentpanel	
0240	8	46 19 086		101)	1	Loudspeaker	Högtalare	
0250						instrument panel	instrumentpanel	
0260	9	79 22 354			2	Screw	Skruv	5
0270								
0280	10	46 16 926		100)	2	Loudspeaker	Högtalare	
0290						front door	framdörr	
0300	10	46 16 983		101)	2	Loudspeaker	Högtalare	
0310						front door	framdörr	
0320	10A	47 14 861		100)	1	.Seal	.Tätning	
0330	10A	47 14 853		101)	1	.Mounting frame	.Monteringsram	
0340	10B	47 14 846		100)	1	.Mounting frame	.Monteringsram	
0350	10B	47 14 879		101)	1	.Seal	.Tätning	
0360	11	79 78 117			6	Screw	Skruv	5
0370								
0380	12	46 16 934		100)	2	Loudspeaker	Högtalare	
0390						rear door	bakdörr	
0400	12	46 17 007		101)	2	Loudspeaker	Högtalare	
0410						rear door	bakdörr	
0420	12A	47 14 903		100)	1	.Mounting frame	.Monteringsram	
0430	12A	47 14 911		101)	1	.Mounting frame	.Monteringsram	
0440	13	79 78 117			6	Screw	Skruv	5
0450								
0460	14	46 17 023		101)	2	Loudspeaker	Högtalare	4
0470						rear shelf	hatthylla	
0480	15	79 70 304			8	Screw	Skruv	5
0490								
0500	16	46 17 072			1	CD-player	CD-spelare	
0510	17	47 11 255			1	.CD magazine	.CD-magasin	5
0520	18	47 11 289			1	Bracket	Konsol	
0530	19	79 77 929			3	Nut	Mutter	5
0540	20	47 11 297			2	Bracket	Konsol	
0550	21	80 59 230			4	Screw	Skruv	5
0560	22	79 78 091			4	Screw	Skruv	5
0570								
0580	23	48 70 309			1	Antenna	Antenn	
0590	23	48 70 317		106)	1	Antenna	Antenn	

100. Audio system "Premium", Pioneer. Audio system "Premium", Pioneer.
101. Audio system "Prestige", harman/kardon. Audio system "Prestige", harman/kardon.
106. With extra "Diversity" aerial amplifier. Med extra antennförstärkare, "Diversity".

MASTER INDEX

0	General	1-A02
2	Engine	1-C02
3A	Electrical systems, instruments	1-F02
4	Transmission	1-I02
5	Brakes	1-K02
6	Front assembly, Steering	1-L02
7	Suspension, Wheels	2-A02
8A	Body, external	2-B02
8B	Body, internal	2-F02
8C	Body, heating and ventilation	2-H02
8D	Tool, Labels	2-I02
9	Accessories	2-J02
10	Numerical register	3-A02

3A GROUP INDEX

Battery	1-F06
Alternator	1-F08
Starter	1-F12
Ignition system	1-F14
Lighting	1-F16
Electrical equipment, other	1-G02
Wiring and fuses	1-G24
Complete sets	1-H22

1-G18 Audio system / Ljudsystem

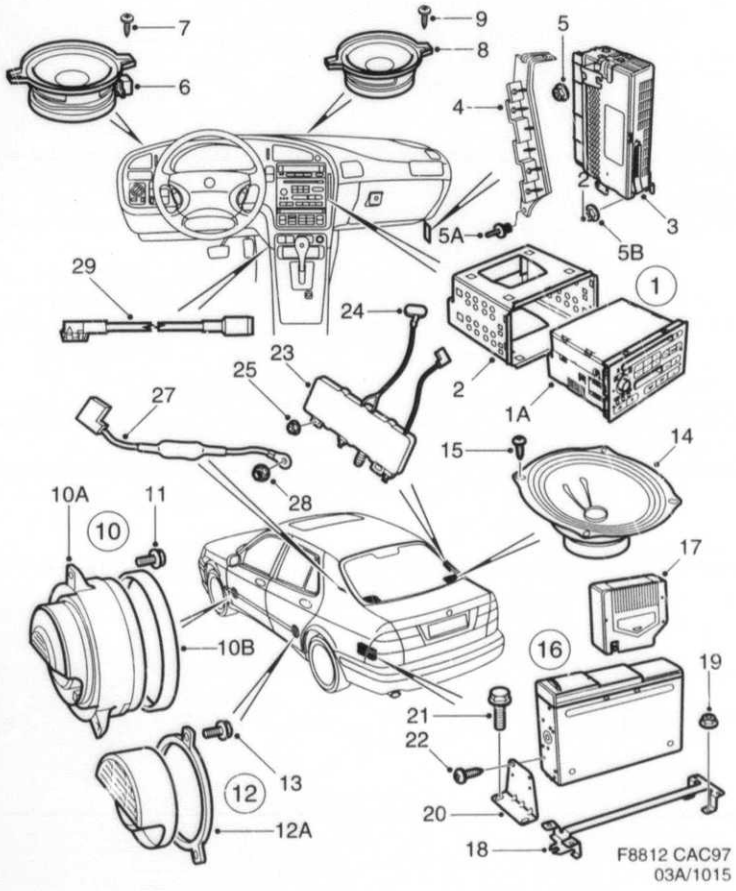

1015	Pos	Part No/Art nr	K S	Notes/Anmärkningar	Qty/ Antal	Description	Benämning	S L
0600	24	47 13 608		34)	1	Cover washer	Täckbricka	
0610	25	79 77 929			2	Nut	Mutter	5
0620	27	47 13 392			1	Suppression filter	Avstörningsfilter	
0630	28	79 77 929			1	Nut	Mutter	5
0640	29	46 16 017			1	Antenna cable	Antennkabel	

34. Without antenna. Utan antenn.

MASTER INDEX

0	General	1-A02
2	Engine	1-C02
3A	Electrical systems, instruments	1-F02
4	Transmission	1-I02
5	Brakes	1-K02
6	Front assembly, Steering	1-L02
7	Suspension, Wheels	2-A02
8A	Body, external	2-B02
8B	Body, internal	2-F02
8C	Body, heating and ventilation	2-H02
8D	Tool, Labels	2-I02
9	Accessories	2-J02
10	Numerical register	3-A02

3A GROUP INDEX

Battery	1-F06
Alternator	1-F08
Starter	1-F12
Ignition system	1-F14
Lighting	1-F16
Electrical equipment, other	1-G02
Wiring and fuses	1-G24
Complete sets	1-H22

1-G20 *Telephone* *Telefon*

1020	Pcs	Part No/Art nr	K S	Notes/Anmärkningar	Qty/ Antal	Description	Benämning	S L
0010	1	46 17 148			1	Microphone	Mikrofon	
0020	2	47 11 602			1	Antenna cable	Antennkabel	

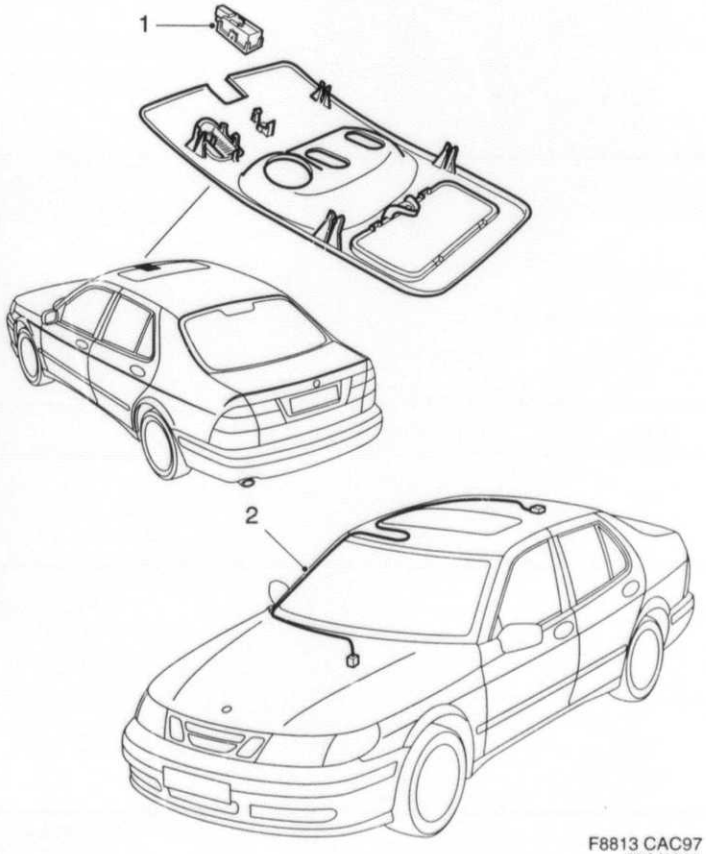

F8813 CAC97
03A/1020

MASTER INDEX

0	General	1-A02
2	Engine	1-C02
3A	Electrical systems, instruments	1-F02
4	Transmission	1-I02
5	Brakes	1-K02
6	Front assembly, Steering	1-L02
7	Suspension, Wheels	2-A02
8A	Body, external	2-B02
8B	Body, internal	2-F02
8C	Body, heating and ventilation	2-H02
8D	Tool, Labels	2-I02
9	Accessories	2-J02
10	Numerical register	3-A02

3A GROUP INDEX

Battery	1-F06
Alternator	1-F08
Starter	1-F12
Ignition system	1-F14
Lighting	1-F16
Electrical equipment, other	1-G02
Wiring and fuses	1-G24
Complete sets	1-H22

1-G22 Anti theft system TWICE

Stöldlarm TWICE

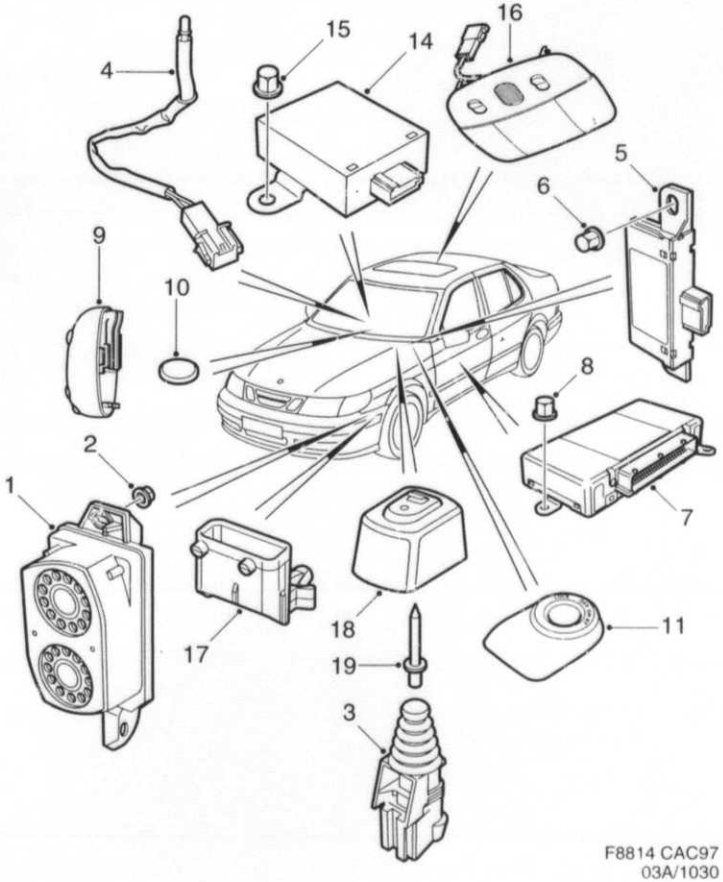

F8814 CAC97
03A/1030

1030	Pos	Part No/Art nr	K S	Notes/Anmärkningar	Qty/ Antal	Description	Benämning	S L
0010	1	45 88 257			1	Siren	Siren	5
0020	2	79 77 929			1	Nut	Mutter	5
0030	3	43 23 259			1	Contact	Kontakt	3
0040	4	48 70 333			1	Diode	Diod	
0050	5	47 11 552		EU, GB, ME, AU, LA, PA	1	Remote control receiver	Fjärrkontrollsmottagare	
0060	5	47 11 545			1	Remote control receiver	Fjärrkontrollsmottagare	
0070	5	47 11 545		196), PA	1	Remote control receiver	Fjärrkontrollsmottagare	
0080	6	40 87 128			1	Plastic nut	Plastmutter	5
0090	7	48 73 527			1	Electronic unit	Elektronikenhet	
0100	8	40 87 128			3	Plastic nut	Plastmutter	5
0110	9	46 63 597		EU, GB, ME, AU, LA, PA	1	Transmitter	Sändare	
0120	9	46 63 613		196), PA	1	Transmitter	Sändare	
0130	10	47 13 707			1	Battery	Batteri	
0140	11	47 14 770			1	Cover	Täcklock	
0170	14	45 88 232		GB	1	Sensor	Sensor	5
0180	15	40 87 128		GB	2	Plastic nut	Plastmutter	5
0190	16			See page 3A-023, 1-F24		Sensor	Sensor	
0200	17	48 06 659		32)	1	Cover	Kåpa	
0210	18	48 73 246		EU, GB	1	Protecting plate	Skyddsplåt	
0220	19	79 72 516		EU, GB	1	Rivet	Nit	5
0230		48 73 535		EU	X	Kit	Sats	
0240				See page 3A-069, 1-H22				
0250		48 73 543		PA	X	Kit	Sats	
0260				See page 3A-069, 1-H22				

32. Without theft alarm. Utan tjuvlarm.
196. With catalytic converter shield. Med katalysatorskydd.

MASTER INDEX

0	General	1-A02
2	Engine	1-C02
3A	Electrical systems, instruments	1-F02
4	Transmission	1-I02
5	Brakes	1-K02
6	Front assembly, Steering	1-L02
7	Suspension, Wheels	2-A02
8A	Body, external	2-B02
8B	Body, internal	2-F02
8C	Body, heating and ventilation	2-H02
8D	Tool, Labels	2-I02
9	Accessories	2-J02
10	Numerical register	3-A02

3A GROUP INDEX

Battery	1-F06
Alternator	1-F08
Starter	1-F12
Ignition system	1-F14
Lighting	1-F16
Electrical equipment, other	1-G02
Wiring and fuses	1-G24
Complete sets	1-H22

1-G24 Front 1998 / Främre 1998

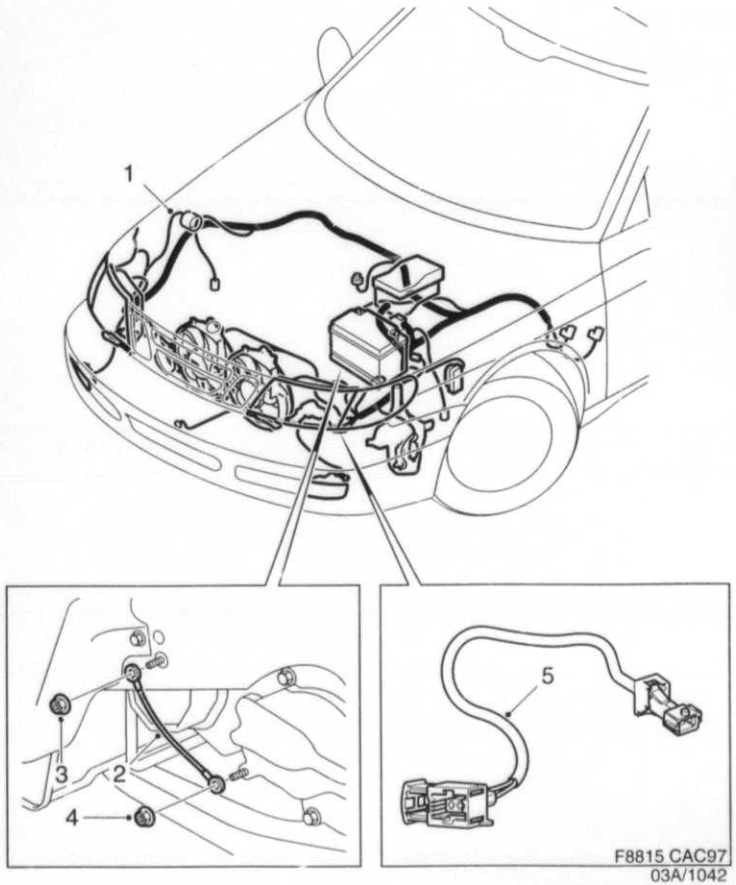

1042	Pos	Part No/Art nr	K S	Notes/Anmärkningar	Qty/ Antal	Description	Benämning	S L
0010	1	48 08 705		LHD	1	Cable harness	Ledningsnät	
0020	1	49 46 521		LHD, EU, LA, ME, PA	1	Cable harness	Ledningsnät	
0030	1	49 46 539		RHD	1	Cable harness	Ledningsnät	
0040								
0050	2	48 12 541			1	Ground cable	Jordkabel	
0060						gearbox	växellåda	
0070						wheel housing	hjulhus	
0080	3	79 77 952			1	Hexagon nut	Sexkantsmutter	5
0090	4	79 77 929			1	Nut	Mutter	5
0100								
0110	5	48 06 428		4-CYL, A	1	Cable harness	Ledningsnät	6
0120						vacuum pump	vakuumpump	

MASTER INDEX

0	General	1-A02
2	Engine	1-C02
3A	Electrical systems, instruments	1-F02
4	Transmission	1-I02
5	Brakes	1-K02
6	Front assembly, Steering	1-L02
7	Suspension, Wheels	2-A02
8A	Body, external	2-B02
8B	Body, internal	2-F02
8C	Body, heating and ventilation	2-H02
8D	Tool, Labels	2-I02
9	Accessories	2-J02
10	Numerical register	3-A02

3A GROUP INDEX

Battery	1-F06
Alternator	1-F08
Starter	1-F12
Ignition system	1-F14
Lighting	1-F16
Electrical equipment, other	1-G02
Wiring and fuses	1-G24
Complete sets	1-H22

1-H02

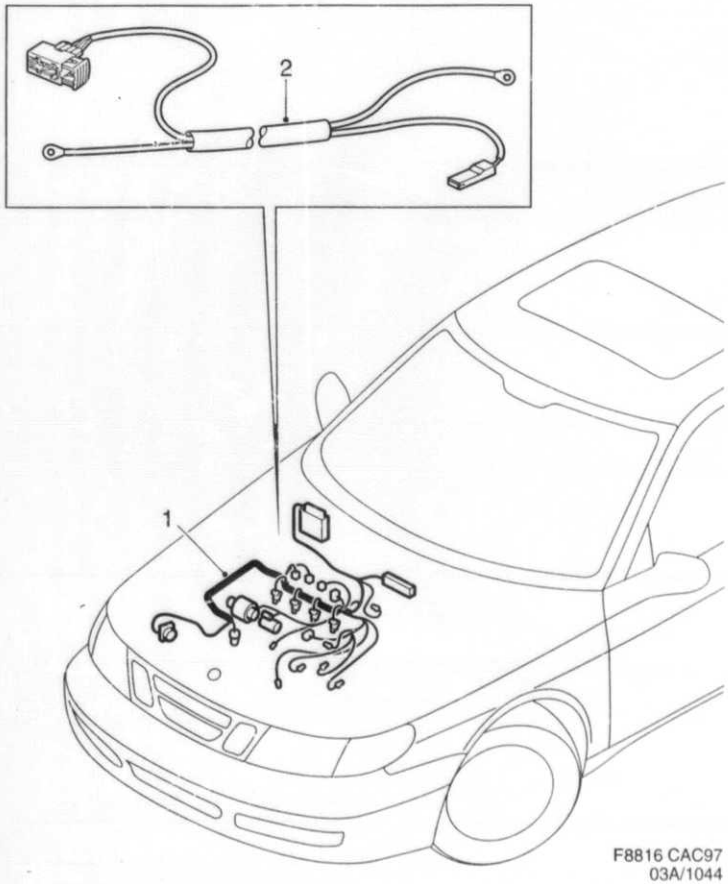

F8816 CAC97
03A/1044

1044	Pos	Part No/Art nr	K S	Notes/Anmärkningar	Qty/ Antal	Description	Benämning	S L
0010	1	48 08 564		LHD	1	Cable harness engine	Ledningsnät motor	8
0020								
0030	1	48 08 572		RHD	1	Cable harness engine	Ledningsnät motor	3
0040								
0050								
0060	2	48 09 067			1	Cable harness starter motor-alternator	Ledningsnät startmotor-generator	
0070								

MASTER INDEX

0	General	1-A02
2	Engine	1-C02
3A	Electrical systems, instruments	1-F02
4	Transmission	1-I02
5	Brakes	1-K02
6	Front assembly, Steering	1-L02
7	Suspension, Wheels	2-A02
8A	Body, external	2-B02
8B	Body, internal	2-F02
8C	Body, heating and ventilation	2-H02
8D	Tool, Labels	2-I02
9	Accessories	2-J02
10	Numerical register	3-A02

3A GROUP INDEX

Battery	1-F06
Alternator	1-F08
Starter	1-F12
Ignition system	1-F14
Lighting	1-F16
Electrical equipment, other	1-G02
Wiring and fuses	1-G24
Complete sets	1-H22

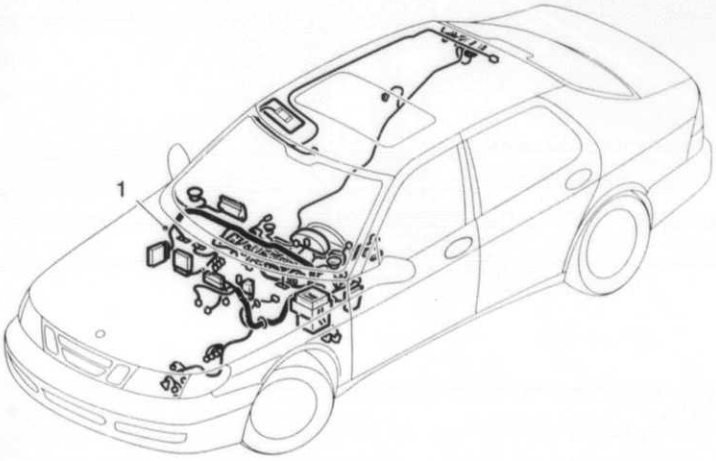

F8817 CAC97
3A/1046

1046	Pos	Part No/Art nr	K S	Notes/Anmärkningar	Qty/ Antal	Description	Benämning	S L
0010	1	49 47 446		M, LHD, AC	1	Cable harness	Ledningsnät	
0020	1	49 47 180		A, LHD, AC	1	Cable harness	Ledningsnät	
0030								
0040	1	49 47 453		M, LHD, ACC	1	Cable harness	Ledningsnät	
0050	1	49 47 198		A, LHD, ACC	1	Cable harness	Ledningsnät	
0060								
0070	1	49 47 420		104), M, LHD, AC	1	Cable harness	Ledningsnät	
0080	1	49 46 562		104), A, LHD, AC	1	Cable harness	Ledningsnät	
0090								
0100	1	49 47 438		104), M, LHD, ACC	1	Cable harness	Ledningsnät	
0110	1	49 46 570		104), A, LHD, ACC	1	Cable harness	Ledningsnät	
0120								
0130	1	49 47 206		M, RHD, AC	1	Cable harness	Ledningsnät	
0140	1	49 47 222		A, RHD, AC	1	Cable harness	Ledningsnät	
0150								
0160	1	49 47 214		M, RHD, ACC	1	Cable harness	Ledningsnät	
0170	1	49 47 230		A, RHD, ACC	1	Cable harness	Ledningsnät	
0180								
0190	1	49 46 588		104), M, RHD, AC	1	Cable harness	Ledningsnät	
0200	1	49 46 604		104), A, RHD, AC	1	Cable harness	Ledningsnät	
0210								
0220	1	49 46 596		104), M, RHD, ACC	1	Cable harness	Ledningsnät	
0230	1	49 46 612		104), A, RHD, ACC	1	Cable harness	Ledningsnät	

104. Audio system. Audio system.

MASTER INDEX

0	General	1-A02
2	Engine	1-C02
3A	Electrical systems, instruments	1-F02
4	Transmission	1-I02
5	Brakes	1-K02
6	Front assembly, Steering	1-L02
7	Suspension, Wheels	2-A02
8A	Body, external	2-B02
8B	Body, internal	2-F02
8C	Body, heating and ventilation	2-H02
8D	Tool, Labels	2-I02
9	Accessories	2-J02
10	Numerical register	3-A02

3A GROUP INDEX

Battery	1-F06
Alternator	1-F08
Starter	1-F12
Ignition system	1-F14
Lighting	1-F16
Electrical equipment, other	1-G02
Wiring and fuses	1-G24
Complete sets	1-H22

1-H06 Rear 1998 / Bakre 1998

1048	Pos	Part No/Art nr	K S	Notes/Anmärkningar	Qty/ Antal	Description	Benämning	S L
0010	1	49 46 620		LHD	1	Cable harness	Ledningsnät	
0020								
0030	1	49 46 638		RHD	1	Cable harness	Ledningsnät	
0040								
0050	2	49 43 841		35), I-BUS	1	Cable	Ledning	
0060								
0070	3	49 43 841		35), P-BUS	1	Cable	Ledning	
0080								
0090		49 43 841		L=25000MM		Cable	Ledning	

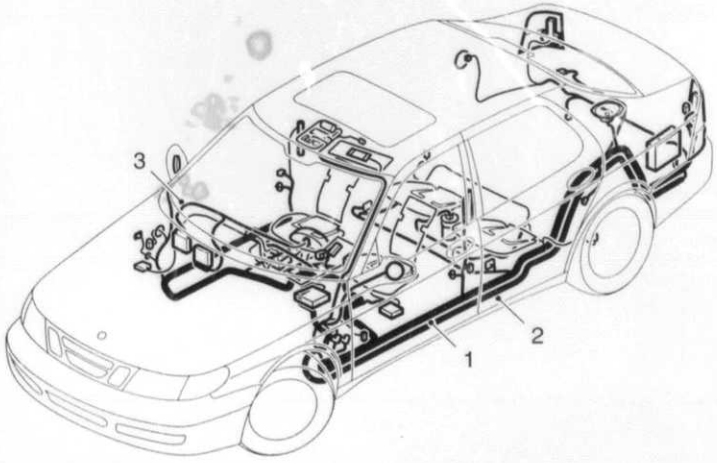

F8818 CAC97
03A/1048

35. Cut to length. Kapas till lämplig längd.

MASTER INDEX

0	General	1-A02
2	Engine	1-C02
3A	Electrical systems, instruments	1-F02
4	Transmission	1-I02
5	Brakes	1-K02
6	Front assembly, Steering	1-L02
7	Suspension, Wheels	2-A02
8A	Body, external	2-B02
8B	Body, internal	2-F02
8C	Body, heating and ventilation	2-H02
8D	Tool, Labels	2-I02
9	Accessories	2-J02
10	Numerical register	3-A02

3A GROUP INDEX

Battery	1-F06
Alternator	1-F08
Starter	1-F12
Ignition system	1-F14
Lighting	1-F16
Electrical equipment, other	1-G02
Wiring and fuses	1-G24
Complete sets	1-H22

1-H08 Doors and roof 1998

Dörrar och tak 1998

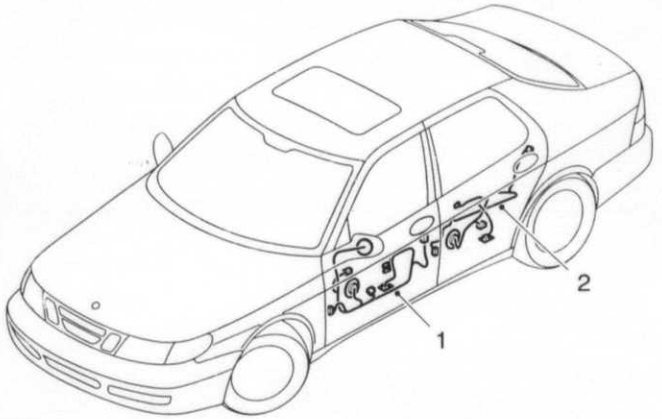

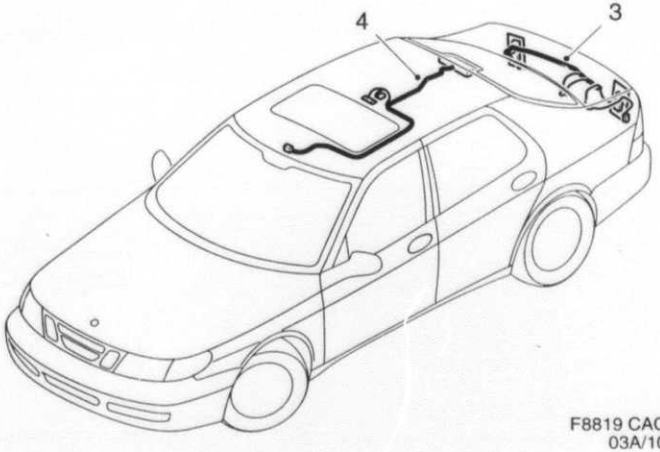

F8819 CAC97
03A/1050

1050	Pos	Part No/Art nr	K S	Notes/Anmärkningar	Qty/ Antal	Description	Benämning	S L
0010	1	49 43 593		50), LHD, LH	1	Cable harness front door	Ledningsnät framdörr	
0020								
0030	1	49 43 601		51), LHD, RH	1	Cable harness front door	Ledningsnät framdörr	
0040								
0050								
0060	1	49 43 627		51), RHD, LH	1	Cable harness front door	Ledningsnät framdörr	
0070								
0080	1	49 43 619		50), RHD, RH	1	Cable harness front door	Ledningsnät framdörr	
0090								
0100								
0110	2	48 06 287			2	Cable harness rear door	Ledningsnät bakdörr	
0120								
0130								
0140	3	49 45 762			1	Cable harness boot lid	Ledningsnät bagagerumslucka	
0150								
0160								
0170	4	49 27 711			1	Cable harness roof	Ledningsnät tak	
0180								

50. Drivers side. Förarsida.
51. Passenger side. Passagerarsida.

MASTER INDEX

0	General	1-A02
2	Engine	1-C02
3A	Electrical systems, instruments	1-F02
4	Transmission	1-I02
5	Brakes	1-K02
6	Front assembly, Steering	1-L02
7	Suspension, Wheels	2-A02
8A	Body, external	2-B02
8B	Body, internal	2-F02
8C	Body, heating and ventilation	2-H02
8D	Tool, Labels	2-I02
9	Accessories	2-J02
10	Numerical register	3-A02

3A GROUP INDEX

Battery	1-F06
Alternator	1-F08
Starter	1-F12
Ignition system	1-F14
Lighting	1-F16
Electrical equipment, other	1-G02
Wiring and fuses	1-G24
Complete sets	1-H22

1-H10 *Tensioning band* / *Spännband*

1090	Pos	Part No/Art nr	K S	Notes/Anmärkningar	Qty/ Antal	Description	Benämning	S L
0010	1	85 52 663		L=198 MM	X	Tensioning band	Spännband	5
0020	2	48 07 939		L=259 MM	X	Tensioning band	Spännband	4
0030	3	79 71 864		L=118 MM	X	Tensioning band	Spännband	5
0040	3	79 71 880		L=259 MM	X	Tensioning band	Spännband	4
0050	3	79 71 898		L=304 MM	X	Tensioning band	Spännband	5
0060	4	75 93 221		L=214 MM	X	Tensioning band	Spännband	5

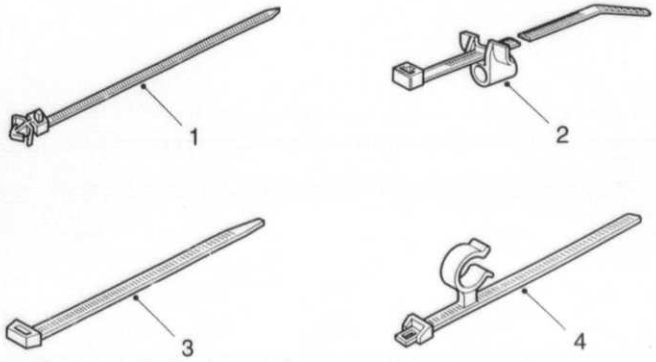

F8820 CAC97
03A/1090

MASTER INDEX

0	General	1-A02
2	Engine	1-C02
3A	Electrical systems, instruments	1-F02
4	Transmission	1-I02
5	Brakes	1-K02
6	Front assembly, Steering	1-L02
7	Suspension, Wheels	2-A02
8A	Body, external	2-B02
8B	Body, internal	2-F02
8C	Body, heating and ventilation	2-H02
8D	Tool, Labels	2-I02
9	Accessories	2-J02
10	Numerical register	3-A02

3A GROUP INDEX

Battery	1-F06
Alternator	1-F08
Starter	1-F12
Ignition system	1-F14
Lighting	1-F16
Electrical equipment, other	1-G02
Wiring and fuses	1-G24
Complete sets	1-H22

1-H12 Bushings, screws, clamps etc / Bussningar, skruvar, klammor etc

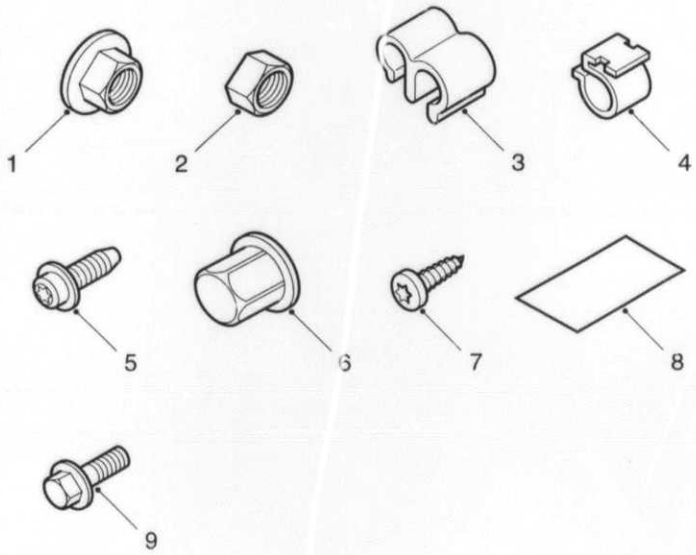

F8821 CAC97
03A/1092

1092	Pos	Part No/Art nr	K S	Notes/Anmärkningar	Qty/ Antal	Description	Benämning	S L
0010	1	79 77 929		M6	X	Nut	Mutter	5
0020						grounding connection	jordanslutning	
0030	1	79 77 911		M5	X	Nut	Mutter	5
0040	2	79 85 377		M6	X	Nut	Mutter	5
0050								
0060	3	91 06 139			X	Tube clamp	Rörklamma	5
0070						ABS cable	ABS-kabel	
0080								
0090	4	71 56 409			X	Clamp	Klammer	5
0100						cable harness	ledningsnät	
0120								
0130	5	79 78 372		M5X12	X	Screw	Skruv	5
0140								
0150	6	40 87 128			X	Plastic nut	Plastmutter	5
0160								
0170	7	79 77 002		ST4,8X19	X	Screw	Skruv	5
0180								
0190	8	46 65 840			X	Tape	Tejp	
0200						rattle guard	skrammelskydd	
0210								
0220	9	79 72 607		M6X12	X	Screw	Skruv	5

MASTER INDEX

0	General	1-A02
2	Engine	1-C02
3A	Electrical systems, instruments	1-F02
4	Transmission	1-I02
5	Brakes	1-K02
6	Front assembly, Steering	1-L02
7	Suspension, Wheels	2-A02
8A	Body, external	2-B02
8B	Body, internal	2-F02
8C	Body, heating and ventilation	2-H02
8D	Tool, Labels	2-I02
9	Accessories	2-J02
10	Numerical register	3-A02

3A GROUP INDEX

Battery	1-F06
Alternator	1-F08
Starter	1-F12
Ignition system	1-F14
Lighting	1-F16
Electrical equipment, other	1-G02
Wiring and fuses	1-G24
Complete sets	1-H22

1-H14 Mounting details Body / Monteringsdetaljer Kaross

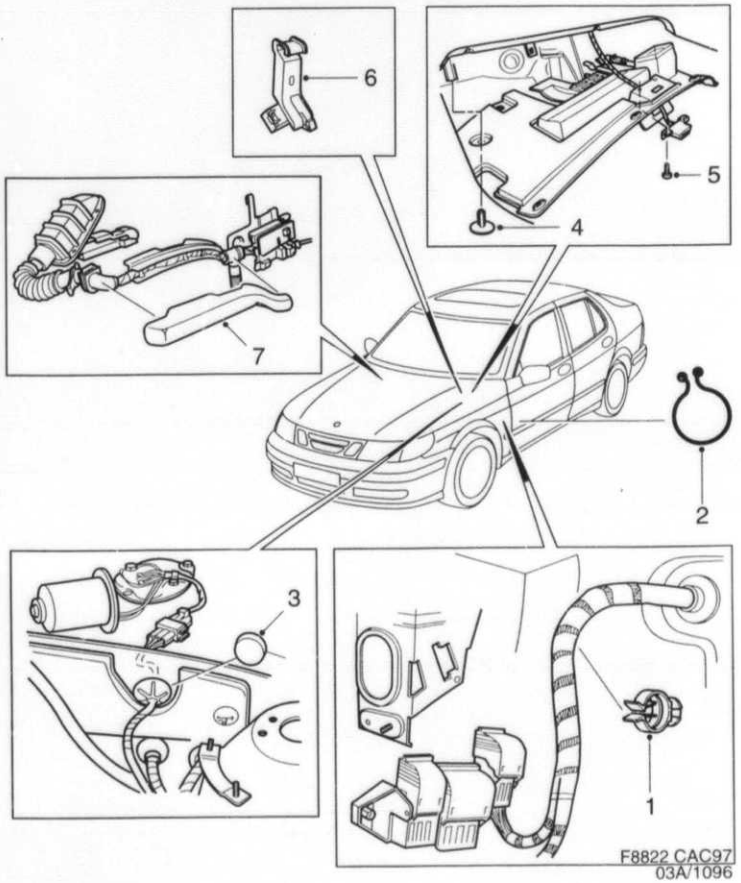

1096	Pos	Part No/Art nr	K S	Notes/Anmärkningar	Qty/ Antal	Description	Benämning	S L
0010	1	48 06 717		LHD	1	Clip	Clips	5
0020						cable harness	ledningsnät	
0030								
0040	2	41 60 446			2	Cable clamp	Kabelklämma	
0050						cable harness	ledningsnät	
0060						seat	stol	
0070								
0080	3	82 04 760		RHD	1	Plug	Plugg	5
0090						cable harness	ledningsnät	
0100								
0110	4	42 59 248		LHD	1	Expanding rivet	Expandernit	6
0120								
0130	5	79 70 536			2	Screw	Skruv	6
0140						data link connector	diagnostikuttag	
0150								
0160	6	48 07 905			1	Clip	Clips	
0170						cable harness	ledningsnät	
0180						pedal arrangement	pedalställ	
0190								
0200	7	48 08 184			1	Cover	Lock	
0210						cable harness	ledningsnät	

MASTER INDEX

0	General	1-A02
2	Engine	1-C02
3A	Electrical systems, instruments	1-F02
4	Transmission	1-I02
5	Brakes	1-K02
6	Front assembly, Steering	1-L02
7	Suspension, Wheels	2-A02
8A	Body, external	2-B02
8B	Body, internal	2-F02
8C	Body, heating and ventilation	2-H02
8D	Tool, Labels	2-I02
9	Accessories	2-J02
10	Numerical register	3-A02

3A GROUP INDEX

Battery	1-F06
Alternator	1-F08
Starter	1-F12
Ignition system	1-F14
Lighting	1-F16
Electrical equipment, other	1-G02
Wiring and fuses	1-G24
Complete sets	1-H22

1-H16

Holders and brackets

Hållare och konsoler

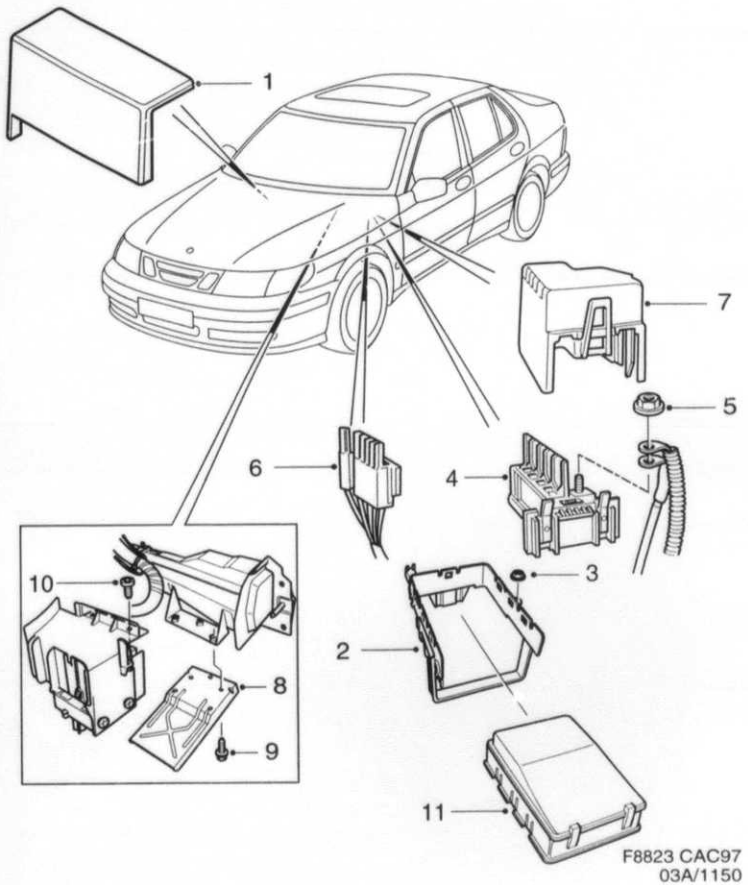

1150	Pos	Part No/Art nr	K S	Notes/Anmärkningar	Qty/ Antal	Description	Benämning	S L
0010	1	47 33 176			1	Cover	Kåpa	
0020						contact housing	kontakthus	
0030						70-pole	70-polig	
0040								
0050	2	45 89 040			1	Bracket	Konsol	
0060						electrical distribut.unit	elcentral	
0070	3	79 85 377			3	Nut	Mutter	5
0080								
0090	4	48 14 349			1	Fuse holder	Säkringshållare	5
0100	5	79 77 929			1	Nut	Mutter	5
0110	6	44 10 577			1	Fuse holder	Säkringshållare	5
0120	7	46 93 362			1	Cover	Lock	
0130								
0140	8	49 29 345			1	Shelf	Hylla	
0150						electrical distribut.unit	elcentral	
0160	9	79 72 607			3	Screw	Skruv	5
0170	10	79 77 002			2	Screw	Skruv	5
0180								
0190	11	49 46 067			1	Cover	Lock	
0200						electrical distribut.unit	elcentral	

MASTER INDEX

0	General	1-A02
2	Engine	1-C02
3A	Electrical systems, instruments	1-F02
4	Transmission	1-I02
5	Brakes	1-K02
6	Front assembly, Steering	1-L02
7	Suspension, Wheels	2-A02
8A	Body, external	2-B02
8B	Body, internal	2-F02
8C	Body, heating and ventilation	2-H02
8D	Tool, Labels	2-I02
9	Accessories	2-J02
10	Numerical register	3-A02

3A GROUP INDEX

Battery	1-F06
Alternator	1-F08
Starter	1-F12
Ignition system	1-F14
Lighting	1-F16
Electrical equipment, other	1-G02
Wiring and fuses	1-G24
Complete sets	1-H22

1-H18 Relays and fuses 1998

Reläer och säkringar 1998

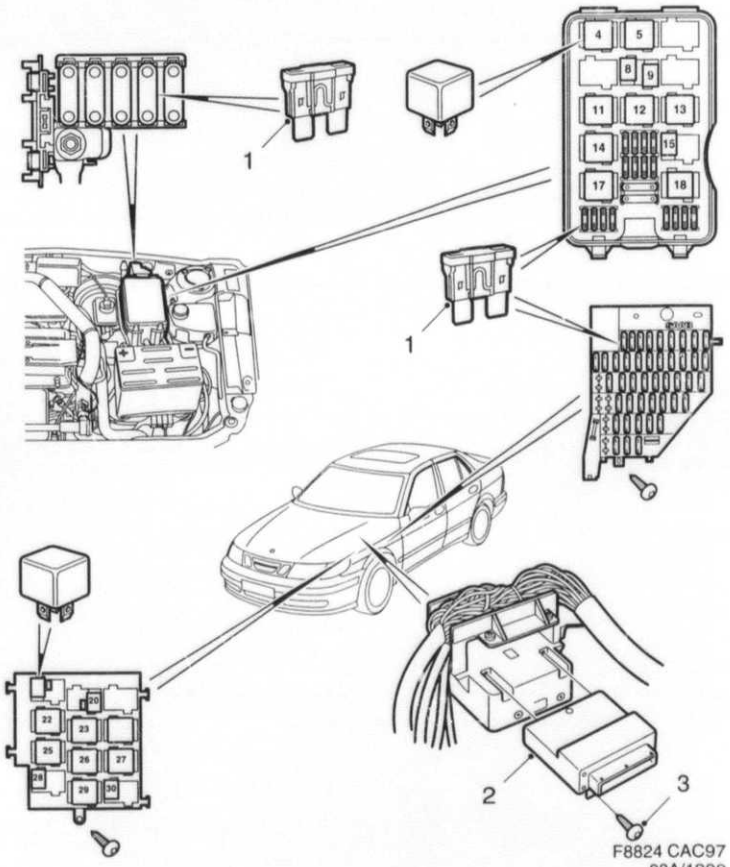

1200	Pos	Part No/Art nr	K S	Notes/Anmärkningar	Qty/ Antal	Description	Benämning	S L
0010	1	79 74 611		5A	X	Fuse	Säkring	1
0020	1	79 74 629		7,5A	X	Fuse	Säkring	1
0030	1	79 74 637		10A	X	Fuse	Säkring	1
0040	1	79 74 645		15A	X	Fuse	Säkring	1
0050	1	79 74 652		20A	X	Fuse	Säkring	1
0060	1	79 74 660		25A	X	Fuse	Säkring	1
0070	1	79 74 678		30A	X	Fuse	Säkring	1
0080	1	40 87 698		40A	X	Fuse	Säkring	1
0090	1	79 83 042		40A, MAXI	X	Fuse	Säkring	1
0100	1	79 83 067		60A, MAXI	X	Fuse	Säkring	1
0110								
0120	2	47 12 345		DICE	1	Throttle control module	Styrdon	
0130	3	79 70 536			2	Screw	Skruv	6
0140								
0150	4	85 33 176			1	Relay	Relä	3
0160						full beam	helljus	
0170	5	85 33 176			1	Relay	Relä	3
0180						dipped beam	halvljus	
0190	8	42 24 192			1	Relay	Relä	6
0200						horn	signalhorn	
0210	12	85 33 176		LH	1	Relay	Relä	3
0220						cooling fan	kylfläkt	
0230						high speed	högfart	
0240	13	85 33 176			1	Relay	Relä	3
0250						cooling fan	kylfläkt	
0260						low speed	lågfart	
0270	14	85 33 176			1	Relay	Relä	3
0280						intermittent wiper	intervalltorkare	
0290	15	42 24 192			1	Relay	Relä	6
0300						fog light	dimljus	
0310	11	85 33 176			1	Relay	Relä	3
0320						AC-compressor	AC-kompressor	
0330	17	41 09 070		2)	1	Relay	Relä	5
0340						bulb check	lampkontroll	
0350	18	85 33 176		RH	1	Relay	Relä	3
0360						cooling fan	kylfläkt	
0370						high speed	högfart	
0380	20	42 24 192			1	Relay	Relä	6
0390						rear seat	baksäte	
0400	22	44 33 322			1	Relay	Relä	3
0410						overheated catalytic conv	overhettad katalysator	
0420	23	85 33 176			1	Relay	Relä	3
0430						engine management system	motorstyrsystem	
0440	25	85 33 176			1	Relay	Relä	3
0450						fuel pump	bränslepump	
0460	26	95 22 061			1	Relay	Relä	5
0470						starter switch	tändningslås	
0480	27	95 22 061			1	Relay	Relä	5
0490						rear window	bakruta	
0500	28	42 24 192		A	1	Relay	Relä	6
0510						reverse lamp	backlampa	
0520	29	85 33 176			1	Relay	Relä	3
0530						starter relay	startrelä	
0540	30	42 24 192			1	Relay	Relä	6
0550						limp home	limp home	

2. Front. Främre.

MASTER INDEX

0	General	1-A02
2	Engine	1-C02
3A	Electrical systems, instruments	1-F02
4	Transmission	1-I02
5	Brakes	1-K02
6	Front assembly, Steering	1-L02
7	Suspension, Wheels	2-A02
8A	Body, external	2-B02
8B	Body, internal	2-F02
8C	Body, heating and ventilation	2-H02
8D	Tool, Labels	2-I02
9	Accessories	2-J02
10	Numerical register	3-A02

3A GROUP INDEX

Battery	1-F06
Alternator	1-F08
Starter	1-F12
Ignition system	1-F14
Lighting	1-F16
Electrical equipment, other	1-G02
Wiring and fuses	1-G24
Complete sets	1-H22

1 -H20

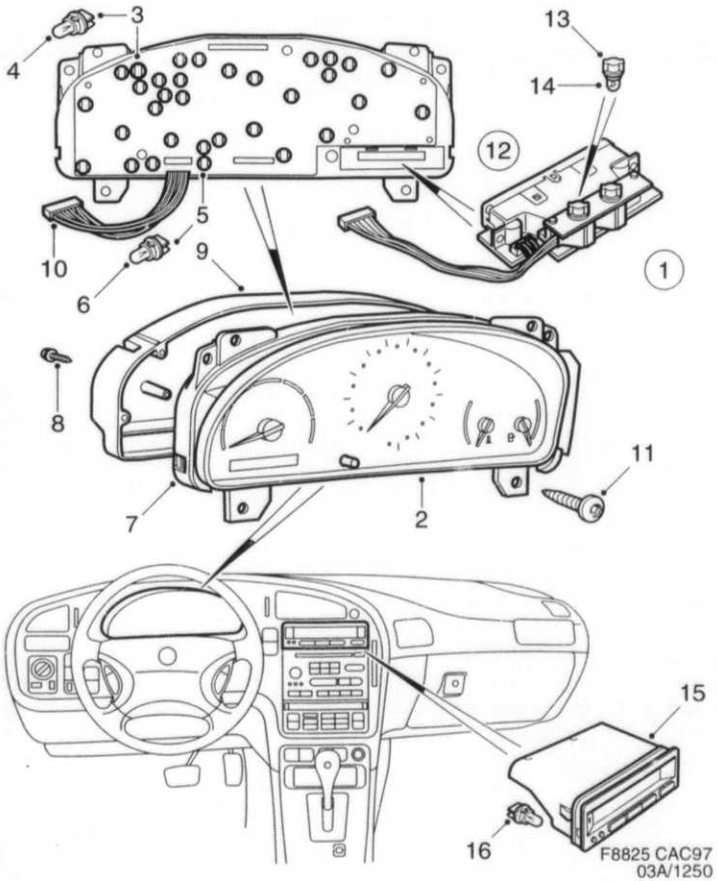

1250	Pos	Part No/Art nr	K S	Notes/Anmärkningar	Qty/ Antal	Description	Benämning	S L
0010	1	48 73 576		M, KM/H	1	Casing	Hus	
0020	1	48 73 584		A, KM/H	1	Casing	Hus	
0030	1	48 73 345		M, MPH	1	Casing	Hus	
0040	1	48 73 352		A, MPH	1	Casing	Hus	
0050	2	47 12 717			1	.Front section	.Frontdel	
0060	3	40 87 565			1	.Bulb socket	.Lamphållare	4
0070						charge warning lamp	laddningskontrollampa	
0080						grey	grå	
0090	4	40 87 441			1	.Bulb	.Glödlampa	3
0100	5	95 05 546			33	.Bulb socket	.Lamphållare	4
0110						black	svart	
0120	6	95 05 538			33	.Bulb	.Glödlampa	4
0130	7	48 73 642		181)	1	Electronic unit	Elektronikenhet	
0135	7	50 37 601		181,182)	1	Electronic unit	Elektronikenhet	
0140	8	79 77 002			4	Screw	Skruv	5
0150	9	47 12 758			1	Cover	Kåpa	
0160	10	47 12 790			1	Cable harness	Ledningsnät	
0170	11	47 12 766			1	Screw kit	Skruvsats	
0180								
0190	12	47 12 741			1	Odometer	Vägmätare	
0200	13	47 12 782			1	.Bulb socket	.Lamphållare	
0210					1	blue	blå	
0220	14	47 12 774			1	Bulb	Glödlampa	
0230								
0240	15	47 13 350		56)	1	Information display	Informationsdisplay	
0250	15	47 13 368		43,56)	1	Information display	Informationsdisplay	
0260	16	40 87 482			6	.Bulb	.Glödlampa	3

43. With driving computer. Med färddator.
56. State mileage. Uppge vägmätarställning.
181. Programmed using an Tech 2 Scan Tool. Programmeras med Tech 2.
182. With EMC communication band 68-87,5 MHZ. Med EMC kommunikationsband 68-87,5 MHZ.

MASTER INDEX

0	General	1-A02
2	Engine	1-C02
3A	Electrical systems, instruments	1-F02
4	Transmission	1-I02
5	Brakes	1-K02
6	Front assembly, Steering	1-L02
7	Suspension, Wheels	2-A02
8A	Body, external	2-B02
8B	Body, internal	2-F02
8C	Body, heating and ventilation	2-H02
8D	Tool, Labels	2-I02
9	Accessories	2-J02
10	Numerical register	3-A02

3A GROUP INDEX

Battery	1-F06
Alternator	1-F08
Starter	1-F12
Ignition system	1-F14
Lighting	1-F16
Electrical equipment, other	1-G02
Wiring and fuses	1-G24
Complete sets	1-H22

1-H22

Electrical system
Elektriskt system

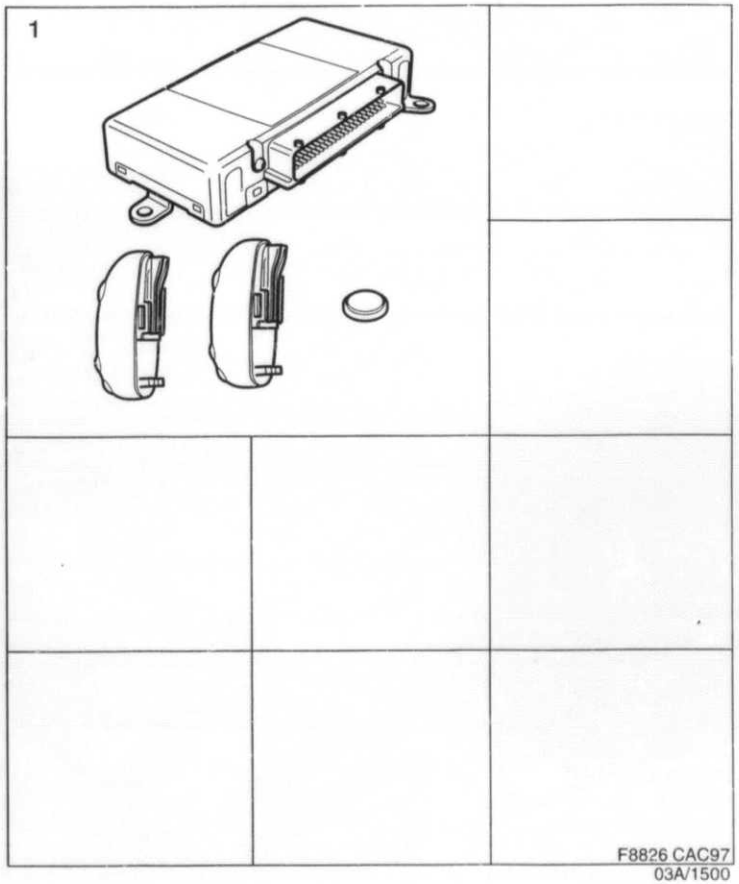

1500	Pos	Part No/Art nr	K S	Notes/Anmärkningar	Qty/ Antal	Description	Benämning	S L
0010	1	48 73 535		EU, TWICE	X	Kit	Sats	
0020		46 63 597			2	.Transmitter	.Sändare	
0030		47 13 707			1	..Battery	..Batteri	
0040		48 73 527			1	.Electronic unit	.Elektronikenhet	
0050								
0060	1	48 73 543		PA, TWICE	X	Kit	Sats	
0070		46 63 613			2	.Transmitter	.Sändare	
0080		47 13 707			1	..Battery	..Batteri	
0090		48 73 527			1	.Electronic unit	.Elektronikenhet	

MASTER INDEX

0	General	1-A02
2	Engine	1-C02
3A	Electrical systems, instruments	1-F02
4	Transmission	1-I02
5	Brakes	1-K02
6	Front assembly, Steering	1-L02
7	Suspension, Wheels	2-A02
8A	Body, external	2-B02
8B	Body, internal	2-F02
8C	Body, heating and ventilation	2-H02
8D	Tool, Labels	2-I02
9	Accessories	2-J02
10	Numerical register	3-A02

3A GROUP INDEX

Battery	1-F06
Alternator	1-F08
Starter	1-F12
Ignition system	1-F14
Lighting	1-F16
Electrical equipment, other	1-G02
Wiring and fuses	1-G24
Complete sets	1-H22

4

Transmission
Kraftöverföring
Transmisión

1-I02

TABLE OF CONTENTS

0041			
0010	**Clutch**		
0020	Clutch, clutch disc	4 : 5	1-I06
0030	**Clutch control**		
0040	Pedal, master cylinder	4 : 7	1-I08
0050	**Gear box, manual**		
0060	Gear box assy	4 : 9	1-I10
0070	Gear box case	4 : 11	1-I12
0080	Slave cylinder	4 : 13	1-I14
0090	Gear shift forks, gear shift shafts	4 : 15	1-I16
0100	Shafts, gears, input shaft	4 : 17	1-I18
0110	Shafts, gears, output shaft	4 : 19	1-I20
0120	Differential	4 : 21	1-I22
0125	**Gear box control, manual**		
0130	Gear shift lever	4 : 23	1-I24
0150	Gear rod	4 : 25	1-J02
0162	Gear shift housing	4 : 27	1-J04
0163	Drive shafts, outer and inner universal joint M and A	4 : 29	1-J06
0165	**Gear box, automatic**		
0170	Gear box assy	4 : 31	1-J08
0180	Converter housing, converter	4 : 33	1-J10
0190	Gear box case, cover	4 : 35	1-J12
0200	TC module, sensor	4 : 37	1-J14
0210	Differential	4 : 21	1-I22
0220	**Gear box control, automatic**		
0270	Gear selector lever	4 : 39	1-J16
0280	Drive shafts, outer and inner universal joint M and A	4 : 29	1-J06
0290	Rear axle, See group 7		
0301	**Complete sets**		
0310	Transmission	4 : 43	1-J20
0320			
0330			

MASTER INDEX

0	General	1-A02
2	Engine	1-C02
3A	Electrical systems, instruments	1-F02
4	Transmission	1-I02
5	Brakes	1-K02
6	Front assembly, Steering	1-L02
7	Suspension, Wheels	2-A02
8A	Body, external	2-B02
8B	Body, internal	2-F02
8C	Body, heating and ventilation	2-H02
8D	Tool, Labels	2-I02
9	Accessories	2-J02
10	Numericai register	3-A02

4 GROUP INDEX

Clutch	1-I06
Clutch control	1-I08
Gear box, manual	1-I10
Gear box control, manual	1-I24
Gear box, automatic	1-J08
Gear box control, automatic	1-J16
Complete sets	1-J20

INNEHÅLLSFÖRTECKNING

0042	**Koppling**		
0350	Koppling, lamell	4 : 5	1-I06
0360	**Kopplingsmanövrering**		
0370	Pedal, huvudcylinder	4 : 7	1-I08
0380	**Växellåda, manuell**		
0390	Växellåda kpl	4 : 9	1-I10
0400	Växellådshus	4 : 11	1-I12
0420	Slavcylinder	4 : 13	1-I14
0430	Växelförargafflar, växelföraraxlar	4 : 15	1-I16
0440	Axlar, kugghjul, ingående axel	4 : 17	1-I18
0450	Axlar, kugghjul, utgående axel	4 : 19	1-I20
0460	Differential	4 : 21	1-I22
0470	**Växellådsmanövrering, manuell**		
0475	Växelspak	4 : 23	1-I24
0480	Växelstång	4 : 25	1-J02
0500	Växelspakshus	4 : 27	1-J04
0509	Drivaxlar, yttre och inre knut M och A	4 : 29	1-J06
0510	**Växellåda, automatisk**		
0515	Växellåda kpl	4 : 31	1-J08
0520	Momentomvandlarhus, momentomvandlare	4 : 33	1-J10
0530	Växellådshus, lock	4 : 35	1-J12
0540	Styrdon, givare	4 : 37	1-J14
0550	Differential	4 : 21	1-I22
0560	**Växellådsmanövrering, automatisk**		
0570	Växelväljarspak	4 : 39	1-J16
0620	Drivaxlar, yttre och inre knut M och A	4 : 29	1-J06
0630	Bakaxel, Se grupp 7		
0640	**Satser**		
0651	Kraftöverföring	4 : 43	1-J20

SUMARIO

0660	**Embrague**		
0670	Embrague, disco de embrague	4 : 5	1-I06
0680	**Mando de embrague**		
	Pedal, cilindro principal	4 : 7	1-I08
	Caja de cambios, manual		
	Caja de cambios, compl.	4 : 9	1-I10
	Carter de caja de cambios	4 : 11	1-I12
	Cojinete de empuje, cylindro esclavo	4 : 13	1-I14
	Horquillas de cambio, ejes de horquilla de cambio	4 : 15	1-I16
	Ejes, engranajes, eje primario	4 : 17	1-I18
	Ejes, engranajes, eje secundario	4 : 19	1-I20
	Diferencial	4 : 21	1-I22
	Mandos del cambio, manual		
	Palanca	4 : 23	1-I24
	Varilla cambio	4 : 25	1-J02
	Caja palanca	4 : 27	1-J04
	Eje de accionamiento, junta homocinetica exterior y interior, M y A	4 : 29	1-J06
	Caja de cambios, automatica		
	Caja de cambios, compl.	4 : 31	1-J08
	Carter de convertidor de par, convertidor	4 : 33	1-J10
	Carter de caja de cambios, tapas	4 : 35	1-J12
	Dispositivo mando, sensor	4 : 37	1-J14
	Differencial	4 : 21	1-I22
	Mando de caja de cambios, automatica		
	Palanca selectora	4 : 39	1-J16
	Eje de accionamiento, junta homocinetica exterior y interior, M y A	4 : 29	1-J06
	Eje trasero, Ver grupo 7		
	Juegos completos		
	Transmision	4 : 43	1-J20

MASTER INDEX

0	General	1-A02
2	Engine	1-C02
3A	Electrical systems, instruments	1-F02
4	Transmission	1-I02
5	Brakes	1-K02
6	Front assembly, Steering	1-L02
7	Suspension, Wheels	2-A02
8A	Body, external	2-B02
8B	Body, internal	2-F02
8C	Body, heating and ventilation	2-H02
8D	Tool, Labels	2-I02
9	Accessories	2-J02
10	Numerical register	3-A02

4 GROUP INDEX

Clutch	1-I06
Clutch control	1-I08
Gear box, manual	1-I10
Gear box control, manual	1-I24
Gear box, automatic	1-J08
Gear box control, automatic	1-J16
Complete sets	1-J20

1-I06

Clutch, clutch disc

Koppling, lamell

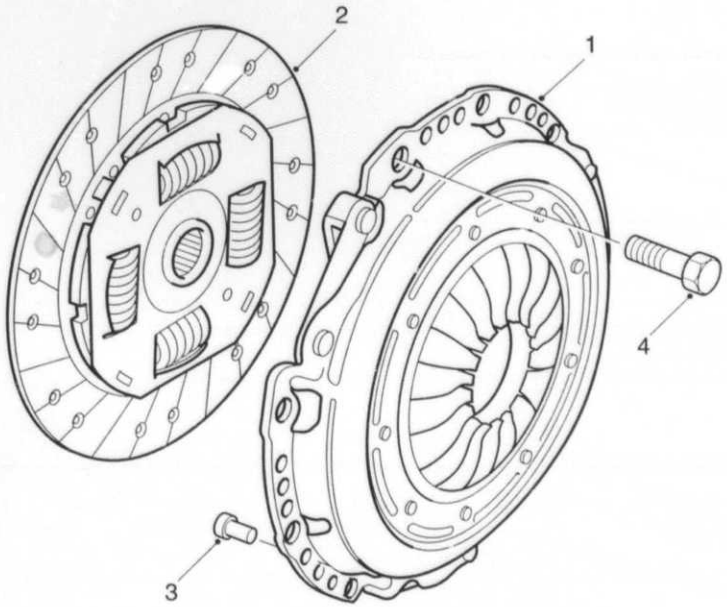

F8711 CAC97
04/0100

	Pos	Part No/Art nr	K S	Notes/Anmärkningar	Qty/ Antal	Description	Benämning	S L
0100								
0010	1	87 46 711			1	Pressure plate	Tryckskiva	2
0020	2	87 46 489			1	Clutch disc	Lamell	2
0030	3	46 85 764			3	Pin	Pinne	5
0040	4	79 67 938			6	Screw	Skruv	5
0050								
0060		87 81 890		See page 4-043, 1-J20	X	Clutch kit	Kopplingssats	6

MASTER INDEX

0	General	1-A02
2	Engine	1-C02
3A	Electrical systems, instruments	1-F02
4	Transmission	1-I02
5	Brakes	1-K02
6	Front assembly, Steering	1-L02
7	Suspension, Wheels	2-A02
8A	Body, external	2-B02
8B	Body, internal	2-F02
8C	Body, heating and ventilation	2-H02
8D	Tool, Labels	2-I02
9	Accessories	2-J02
10	Numerical register	3-A02

4 GROUP INDEX

Clutch	1-I06
Clutch control	1-I08
Gear box, manual	1-I10
Gear box control, manual	1-I24
Gear box, automatic	1-J08
Gear box control, automatic	1-J16
Complete sets	1-J20

1-I08

Pedal, master cylinder

Pedal, huvudcylinder

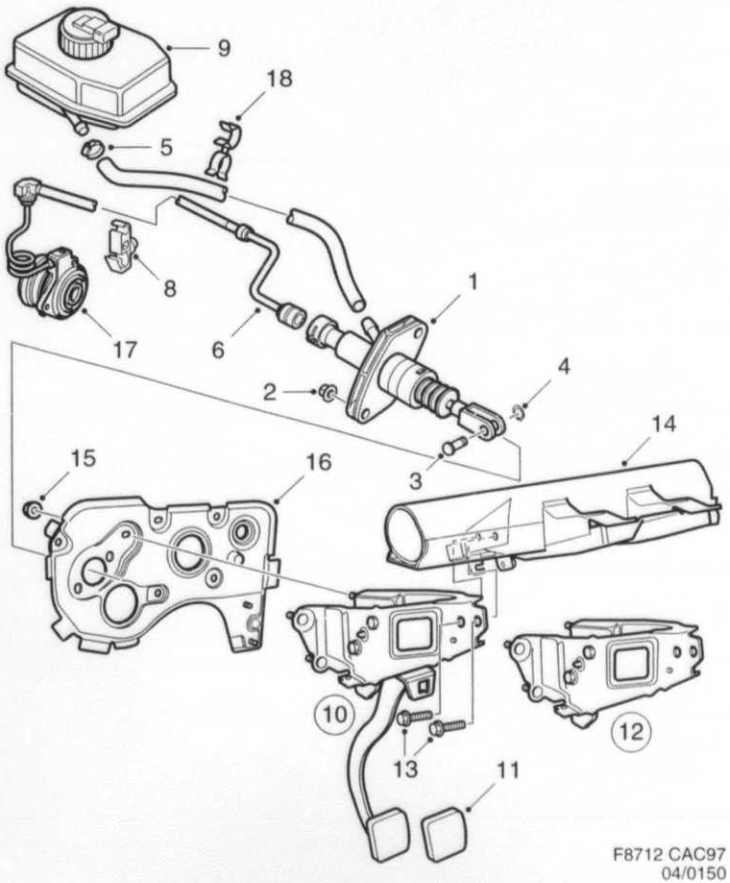

F8712 CAC97
04/0150

0150	Pos	Part No/Art nr	K S	Notes/Anmärkningar	Qty/ Antal	Description	Benämning	S L
0010	1	45 79 637			1	Clutch cylinder	Kopplingscylinder	2
0020	2	79 71 922			2	Nut	Mutter	3
0030	3	43 45 435			1	Pin	Sprint	5
0040	4	43 45 443			1	Clip	Clips	5
0050	5	79 77 697			1	Hose clamp	Slangklamma	5
0060	6	49 26 408		LHD	1	Clutch hose	Kopplingsslang	2
0070	6	49 26 416		RHD	1	Clutch hose	Kopplingsslang	2
0080	8	45 79 363		RHD	1	Pipe clip	Rörklämma	
0090	9			See page 5-011, 1-K12		Reservoir	Behållare	
0100	10	46 87 596		M, LHD	1	Bracket	Konsol	
0110	10	46 87 638		M, RHD	1	Bracket	Konsol	
0120	11	46 88 586			1	,Pedal pad	,Pedalgummi	
0130	12	45 65 610		A, LHD	1	Bracket	Konsol	
0140	12	45 65 628		A, RHD	1	Bracket	Konsol	
0150	13	79 78 190		LHD	2	Screw	Skruv	5
0160	13	79 78 190		RHD	1	Screw	Skruv	5
0170	14			See page 6-009, 1-L10		Steering wheel member	Rattbalk	
0180	15	43 45 419			3	Nut	Mutter	5
0190	16			See page 5-015, 1-K16		Cowl plate	Torpedplåt	
0200	17			See page 4-013, 1-I14		Slave cylinder	Slavcylinder	
0210	18	40 28 569		RHD	1	Clamp	Klammer	5

MASTER INDEX

0	General	1-A02
2	Engine	1-C02
3A	Electrical systems, instruments	1-F02
4	Transmission	1-I02
5	Brakes	1-K02
6	Front assembly, Steering	1-L02
7	Suspension, Wheels	2-A02
8A	Body, external	2-B02
8B	Body, internal	2-F02
8C	Body, heating and ventilation	2-H02
8D	Tool, Labels	2-I02
9	Accessories	2-J02
10	Numerical register	3-A02

4 GROUP INDEX

Clutch	1-I06
Clutch control	1-I08
Gear box, manual	1-I10
Gear box control, manual	1-I24
Gear box, automatic	1-J08
Gear box control, automatic	1-J16
Complete sets	1-J20

1-I10

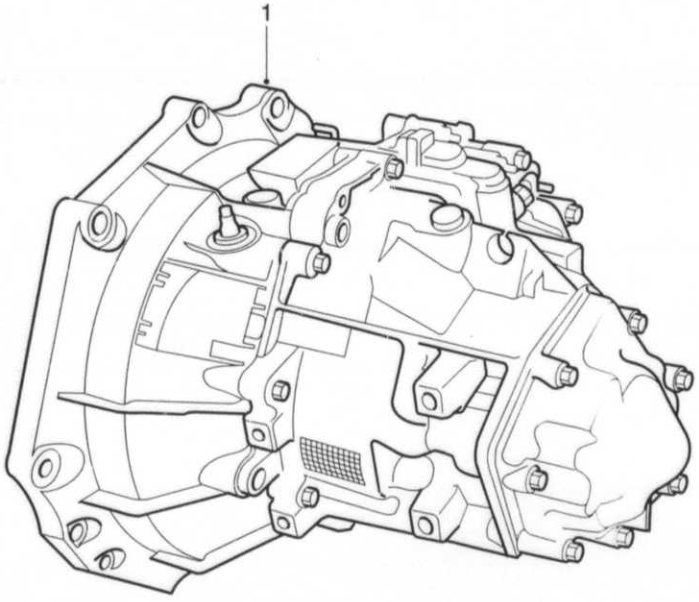

F8713 CAC97
04/0175

	Pos	Part No/Art nr	K S	Notes/Anmärkningar	Qty/ Antal	Description	Benämning	S L
0175								
0010	1	87 48 295		7), 4-CYL	1	Gearbox	Växellåda	5
0020				MARKED: GM 55B01				

7. Also available as exchange unit. Finns även som utbytesenhet.

MASTER INDEX

0	General	1-A02
2	Engine	1-C02
3A	Electrical systems, instruments	1-F02
4	Transmission	1-I02
5	Brakes	1-K02
6	Front assembly, Steering	1-L02
7	Suspension, Wheels	2-A02
8A	Body, external	2-B02
8B	Body, internal	2-F02
8C	Body, heating and ventilation	2-H02
8D	Tool, Labels	2-I02
9	Accessories	2-J02
10	Numerical register	3-A02

4 GROUP INDEX

Clutch	1-I06
Clutch control	1-I08
Gear box, manual	1-I10
Gear box control, manual	1-I24
Gear box, automatic	1-J08
Gear box control, automatic	1-J16
Complete sets	1-J20

1-I12

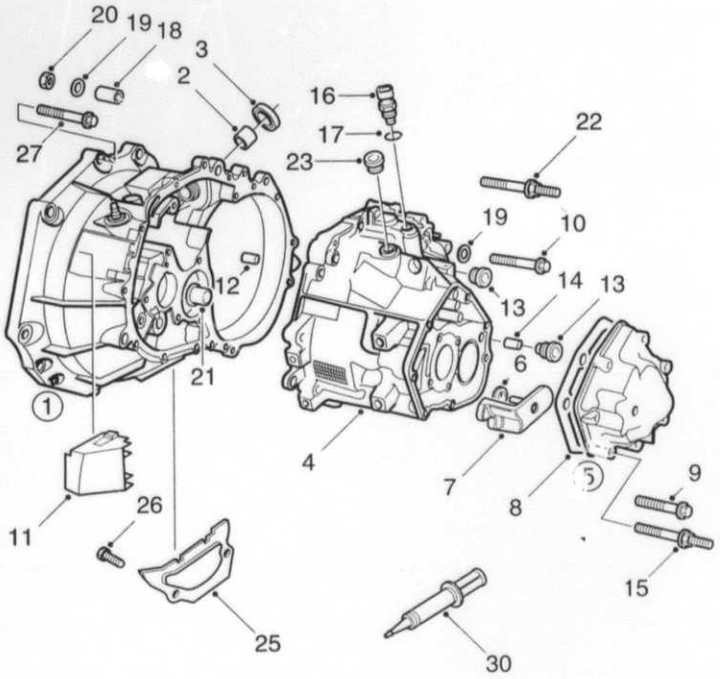

F8714 CAC97
04/0200

0200	Pos	Part No/Art nr	K S	Notes/Anmärkningar	Qty/ Antal	Description	Benämning	S L
0010				See page 4-009, 1-I10		Gear box, manual	Växellåda, manuell	
0020	1	87 47 354			1	.Bell housing	.Kopplingskåpa	5
0030	2	*87 31 143*		1) NLS	1	..Bushing	..Bussning	4
0040	3	87 41 878			1	..Seal	..Tätning	4
0050	4	87 44 047			1	.Gearbox housing	.Växellådshus	6
0060	5	87 46 463			1	.Cover	.Lock	5
0070	6	87 34 105			1	..Washer	..Bricka	5
0080	7	87 34 097			1	..Oil collector	..Oljesamlare	5
0090	8	87 34 824			1	.Gasket	.Packning	3
0100	9	79 72 714			6	.Flange screw	.Flänsskruv	5
0110	10	79 72 714			14	.Flange screw	.Flänsskruv	5
0120	11	87 34 816			1	.Cover	.Lock	6
0130	12	87 01 658			1	.Sintered compact	.Sinterkropp	3
0140	13	87 43 858			2	.Plug	.Plugg	6
0150	14	87 34 881			1	.Magnet	.Magnet	3
0155	15	87 38 411			1	.Flange screw	.Flänsskruv	5
0160	16	46 17 668			1	.Reverse light contact	.Backljuskontakt	3
0170	17	43 46 748			1	.Gasket	.Packning	3
0180	18	87 23 967			2	.Guide pin	.Styrstift	5
0190	19	70 61 328			2	.Washer	.Bricka	5
0200	20	80 74 106			2	.Nut	.Mutter	5
0205	21	87 30 665			1	.Sleeve	.Hylsa	4
0210	22	87 38 411			3	.Flange screw	.Flänsskruv	5
0215	23	47 76 266			1	.Plug	.Plugg	6
0220	25	45 73 069		4-CYL	1	Baffle	Stänkskydd	6
0230	26	46 85 475		4-CYL	2	Hexagon screw	Sexkantsskruv	5
0240	27	79 84 297		4-CYL	5	Screw	Skruv	5
0250	30	93 21 795		25 ML	X	Flange sealant	Flänstätning	5

1. Not as separate spare part. Ej som separat reservdel.

MASTER INDEX

0	General	1-A02
2	Engine	1-C02
3A	Electrical systems, instruments	1-F02
4	Transmission	1-I02
5	Brakes	1-K02
6	Front assembly, Steering	1-L02
7	Suspension, Wheels	2-A02
8A	Body, external	2-B02
8B	Body, internal	2-F02
8C	Body, heating and ventilation	2-H02
8D	Tool, Labels	2-I02
9	Accessories	2-J02
10	Numerical register	3-A02

4 GROUP INDEX

Clutch	1-I06
Clutch control	1-I08
Gear box, manual	1-I10
Gear box control, manual	1-I24
Gear box, automatic	1-J08
Gear box control, automatic	1-J16
Complete sets	1-J20

1-I14

Slave cylinder
Slavcylinder

0250	Pos	Part No/Art nr	Ä S	Notes/Anmärkningar	Qty/ Antal	Description	Benämning	S L
0010	1	87 48 667			1	Slave cylinder	Slavcylinder	2
0020	2			1)	1	.Seal	.Tätning	
0030	3			1)	1	.Release bearing	.Urtrampningslager	
0040	10	87 44 427			1	Tube	Rör	2
0050	11	87 38 155			3	Screw	Skruv	5
0060	12	87 43 221			1	Sleeve	Hylsa	5

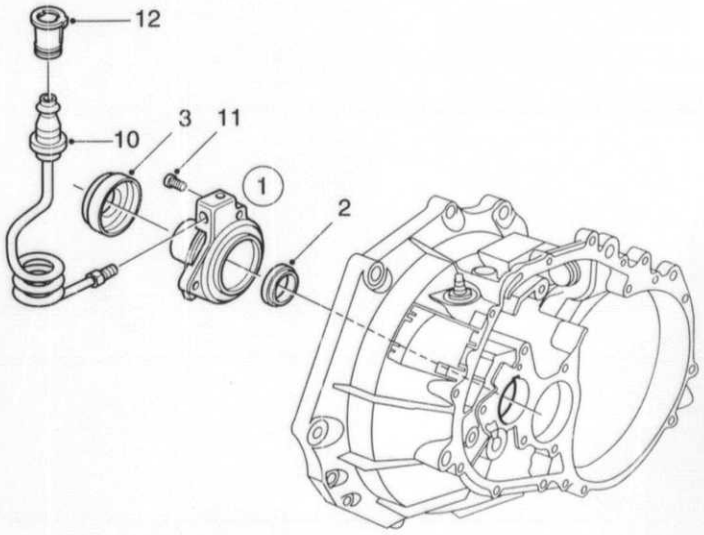

F8715 CAC97
04/0250

1. Not as separate spare part. Ej som separat reservdel.

MASTER INDEX

0	General	1-A02
2	Engine	1-C02
3A	Electrical systems, instruments	1-F02
4	Transmission	1-I02
5	Brakes	1-K02
6	Front assembly, Steering	1-L02
7	Suspension, Wheels	2-A02
8A	Body, external	2-B02
8B	Body, internal	2-F02
8C	Body, heating and ventilation	2-H02
8D	Tool, Labels	2-I02
9	Accessories	2-J02
10	Numerical register	3-A02

4 GROUP INDEX

Clutch	1-I06
Clutch control	1-I08
Gear box, manual	1-I10
Gear box control, manual	1-I24
Gear box, automatic	1-J08
Gear box control, automatic	1-J16
Complete sets	1-J20

1-I16 Gear shift forks, gear shift shafts / Växelförargafflar, växelföraraxlar

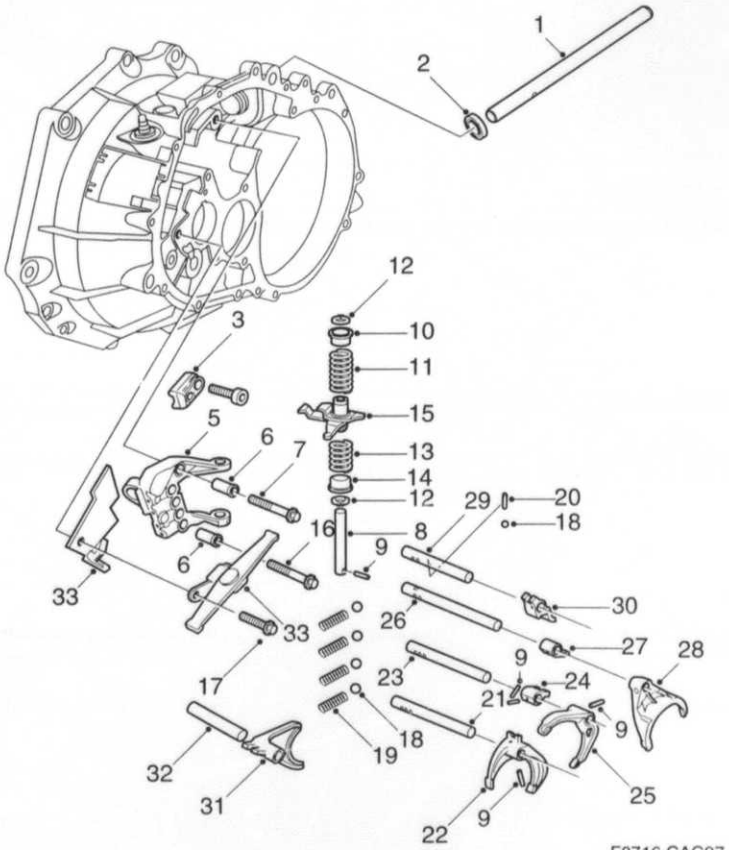

F8716 CAC97
04/0300

0300	Pos	Part No/Art nr	K S	Notes/Anmärkningar	Qty/ Antal	Description	Benämning	S L
0010						Gear box, manual	Växellåda, manuell	
0020	1	87 39 781		See page 4-009, 1-I10	1	.Gear rod	.Växelstång	6
0030	2			See page 4-011, 1-I12		Bushing	Bussning	
0040	3	87 35 276			1	.Companion flange	.Medbringare	5
0050	4	80 59 792			1	.Screw	.Skruv	5
0060	5	87 34 808			1	.Bearing bracket	.Lagerbock	5
0070	6	87 19 650			2	.Guide sleeve	.Styrhylsa	5
0080	7	79 72 714			1	.Flange screw	.Flänsskruv	5
0090	8	87 46 216			1	.Pivot pin	.Lagertapp	6
0100	9	81 17 657			7	.Pin	.Pinne	5
0110	10	87 21 565			1	.Guide	.Styrning	4
0120	11	87 21 573			1	.Spring	.Fjäder	5
0130	12	87 26 754			2	.Retaining ring	.Spärring	5
0140	13	87 21 615			1	.Spring	.Fjäder	5
0150	14	87 21 623			1	.Spring guide	.Fjäderstyrning	4
0160	15	87 41 381			1	.Gear selector	.Växelförare	6
0170	16	79 72 714			1	.Flange screw	.Flänsskruv	5
0180	17	79 73 779			1	.Screw	.Skruv	5
0190	18	87 17 027			7	.Ball	.Kula	5
0200	19	87 23 397			4	.Spring	.Fjäder	5
0210	20	87 19 684			2	.Pin	.Pinne	5
0220	21	87 41 043			1	.Shift rail	.Växelföraraxel	6
0230						1/2	1/2	
0240	22	87 34 741			1	.Gear selector fork	.Växelförargaffel	5
0250						1/2	1/2	
0260	23	87 31 077			1	.Shift rail	.Växelföraraxel	6
0270						3/4	3/4	
0280	24	87 40 649			1	.Companion flange	.Medbringare	5
0290						3/4	3/4	
0300	25	87 27 869			1	.Gear selector fork	.Växelförargaffel	5
0310						3/4	3/4	
0320	26	87 40 714			1	.Shift rail	.Växelföraraxel	6
0330						5	5	
0340	27	87 40 656			1	.Companion flange	.Medbringare	5
0350						5	5	
0360	28	87 46 638			1	.Gear selector fork	.Växelförargaffel	5
0370						5	5	
0380	29	87 35 656			1	.Shift rail	.Växelföraraxel	6
0390						R	R	
0400	30	87 46 190			1	.Companion flange	.Medbringare	5
0410						R	R	
0420	31	87 35 599			1	.Gear selector fork	.Växelförargaffel	5
0430						R	R	
0440	32	87 30 111			1	.Shift rail	.Växelföraraxel	6
0450						R	R	
0460	33	87 45 630			1	.Lever	.Hävarm	5
0470						R	R	

MASTER INDEX

0	General	1-A02
2	Engine	1-C02
3A	Electrical systems, instruments	1-F02
4	Transmission	1-I02
5	Brakes	1-K02
6	Front assembly, Steering	1-L02
7	Suspension, Wheels	2-A02
8A	Body, external	2-B02
8B	Body, internal	2-F02
8C	Body, heating and ventilation	2-H02
8D	Tool, Labels	2-I02
9	Accessories	2-J02
10	Numerical register	3-A02

4 GROUP INDEX

Clutch	1-I06
Clutch control	1-I08
Gear box, manual	1-I10
Gear box control, manual	1-I24
Gear box, automatic	1-J08
Gear box control, automatic	1-J16
Complete sets	1-J20

1-I18

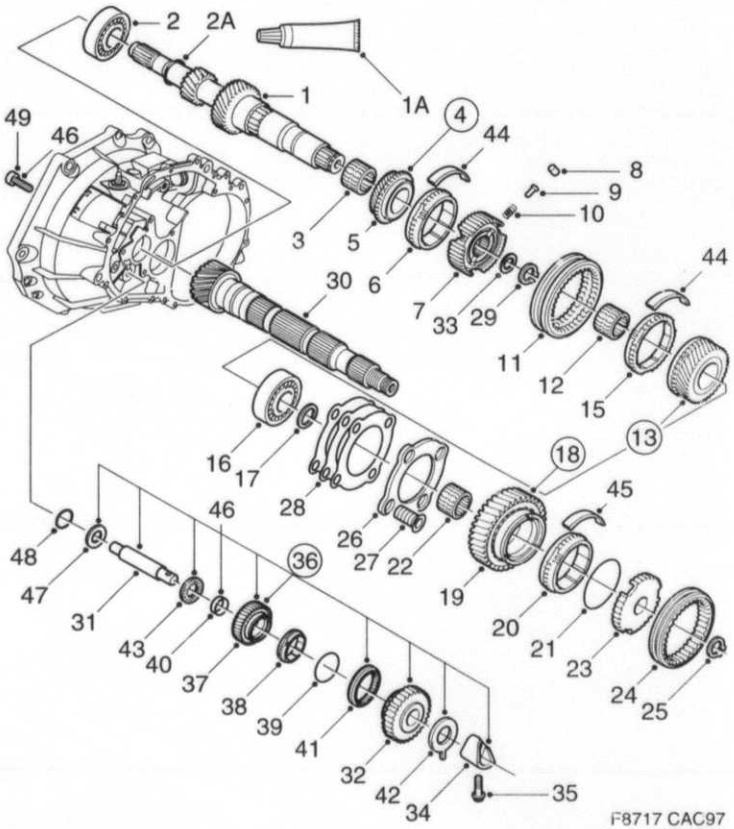

F8717 CAC97
04/0325

0325	Pos	Part No/Art nr	K S	Notes/Anmärkningar	Qty/ Antal	Description	Benämning	S L
0010				See page 4-009, 1-I10		Gear box, manual	Växellåda, manuell	
0020	1	87 48 956			1	.Shaft	.Axel	6
0030	1A	87 81 684		50 GR	X	.Grease	.Fett	
0040	2	87 19 163			1	.Roller bearing	.Rullager	3
0050	2A			See page 4-013, 1-I14	1	.Seal	.Tätning	
0060	3	87 31 150			1	.Needle bearing	.Nållager	3
0070	4	87 81 981			1	.Gear	.Kuggdrev	4
0080						3	3	
0090	5	87 42 199		1)	1	..Gear	..Kuggdrev	4
0100	6	87 40 185			1	..Synchromesh	..Synkronisering	3
0110	7	87 47 909			1	.Hub	.Nav	5
0120	8	87 16 839			1	.Roller	.Rulle	5
0130	9	87 16 821			1	.Plunger	.Plunge	5
0140	10	87 23 330			1	.Compression spring	.Tryckfjäder	4
0150	11	87 36 597			1	.Sleeve	.Muff	5
0160	12	87 31 192			1	.Needle bearing	.Nållager	3
0170	13	87 81 452			1	.Gear	.Kuggdrev	4
0180						4	4	
0190	14	87 37 447		1)	1	..Gear	..Kuggdrev	4
0200	15	87 40 185			1	..Synchromesh	..Synkronisering	3
0210	16	87 35 490			1	.Roller bearing	.Rullager	3
0220	17	87 21 946			1	.Retaining ring	.Spårring	4
0230	18	87 81 916			1	.Gear	.Kuggdrev	4
0240						5	5	
0250	19	87 47 172		1)	1	..Gear	..Kuggdrev	4
0260	20	87 45 606			1	..Synchromesh	..Synkronisering	3
0270	21	87 35 441			1	..Spring ring	..Fjäderring	4
0280	22	87 21 953			1	.Needle bearing	.Nållager	3
0290	23	87 44 997			1	.Hub	.Nav	5
0300	24	87 37 074			1	.Sleeve	.Muff	5
0310	25	87 34 071			1	.Retaining ring	.Spårring	5
0320	26	87 31 333			1	.Support	.Stöd	5
0330	27	87 41 506			4	.Screw	.Skruv	5
0340	28	87 31 366		0.10 MM	X	.Adjusting washer	.Justerbricka	5
0350	28	87 31 374		0.15 MM	X	.Adjusting washer	.Justerbricka	5
0360	28	87 31 382		0.30 MM	X	.Adjusting washer	.Justerbricka	5
0370	28	87 42 421		0.50 MM	X	.Adjusting washer	.Justerbricka	5
0380	28	87 42 439		1.00 MM	X	.Adjusting washer	.Justerbricka	5
0390	29	87 19 189			1	.Lock ring	.Låsring	5
0400	30			See page 4-019, 1-I20	1	.Pinion shaft	.Pinjongaxel	
0410	31	87 44 237			1	.Shift rail	.Växelföraraxel	6
0420						R	R	
0430	32	87 36 399			1	.Gear	.Kugghjul	5
0440	32	87 36 399			1	.Gear	.Kugghjul	5
0445	33	87 47 925			1	.Washer	.Bricka	5
0450	34	87 40 672			1	.Support	.Stöd	5
0460	35	79 72 714			1	.Flange screw	.Flänsskruv	5
0470	36	87 81 882			1	.Gear	.Kugghjul	5
0480						R	R	
0490	37	87 47 016		1)	1	..Reverse gear	..Backkugghjul	5
0500	38	87 40 169			1	..Synchromesh	..Synkronisering	3
0510	39	87 29 964			1	..Spring ring	..Fjäderring	4
0520	40	87 41 241			2	..Bushing	..Bussning	4
0530	41	87 44 153			1	.Sleeve	.Muff	5
0540	42	87 40 680			1	.Thrust washer	.Axialbricka	4
0550	43	87 34 659			1	.Needle bearing	.Axialnållager	3
0560	44	87 43 791			6	.Leaf spring	.Bladfjäder	4
0570	45	87 43 809			3	.Leaf spring	.Bladfjäder	4
0580	46	87 46 372			1	.Gear	.Kugghjul	5
0590	47	87 44 252			1	.Spacer washer	.Distansbricka	5
0600	48	79 67 573			1	.O-ring	.O-ring	2
0610	49	80 59 792			1	.Screw	.Skruv	5

1. Not as separate spare part. Ej som separat reservdel.

MASTER INDEX

0	General	1-A02
2	Engine	1-C02
3A	Electrical systems, instruments	1-F02
4	Transmission	1-I02
5	Brakes	1-K02
6	Front assembly, Steering	1-L02
7	Suspension, Wheels	2-A02
8A	Body, external	2-B02
8B	Body, internal	2-F02
8C	Body, heating and ventilation	2-H02
8D	Tool, Labels	2-I02
9	Accessories	2-J02
10	Numerical register	3-A02

4 GROUP INDEX

Clutch	1-I06
Clutch control	1-I08
Gear box, manual	1-I10
Gear box control, manual	1-I24
Gear box, automatic	1-J08
Gear box control, automatic	1-J16
Complete sets	1-J20

1-I20

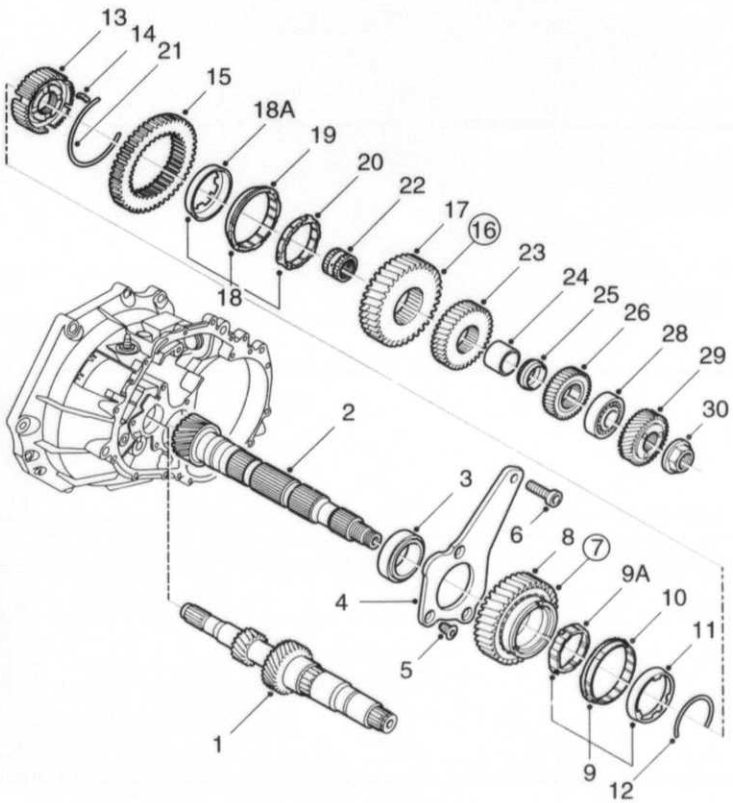

F8718 CAC97
04/0335

0335	Pos	Part No/Art nr	K S	Notes/Anmärkningar	Qty/ Antal	Description	Benämning	S L
0010				See page 4-009, 1-I10		Gear box, manual	Växellåda, manuell	
0020	1			See page 4-017, 1-I18	1	.Shaft	.Axel	
0030	2	87 49 020		4-CYL	1	.Pinion shaft	.Pinjongaxel	5
0050	3	87 29 378			1	.Roller bearing	.Rullager	3
0060	4	87 46 687			1	.Support	.Stöd	5
0070	5	46 85 186			3	.Screw	.Skruv	5
0080	6	80 59 792			1	.Screw	.Skruv	5
0090	7	87 81 478			1	.Gear	.Kugghjul	4
0100						1	1	
0110	8	87 35 862		1)	1	..Gear	..Kugghjul	4
0120	9	87 81 734			1	..Synchromesh	..Synkronisering	3
0130	9A	87 40 789			1	...Synchromesh	...Synkronisering	3
0140	10	87 40 797			1	...Synchromesh	...Synkronisering	3
0150	11	87 34 436			1	...Synchromesh	...Synkronisering	3
0160	12	87 34 451			1	.Spring ring	.Fjäderring	4
0170	13	87 35 920			1	.Hub	.Nav	5
0180	14	87 35 680			3	.Companion flange	.Medbringare	4
0190	15	87 35 896			1	.Sleeve	.Muff	5
0200	16	87 81 486			1	.Gear	.Kugghjul	4
0210						2	2	
0220	17	87 35 847		1)	1	..Gear	..Kugghjul	4
0230	18	87 81 734			1	..Synchromesh	..Synkronisering	3
0240	18A	87 34 436			1	...Synchromesh	...Synkronisering	3
0250	19	87 40 797			1	...Synchromesh	...Synkronisering	3
0260	20	87 40 789			1	...Synchromesh	...Synkronisering	3
0270	21	87 34 451			1	.Spring ring	.Fjäderring	4
0280	22	87 43 205			1	.Bearing bushing	.Lagerbussning	3
0290	23	87 30 319			1	.Gear	.Kugghjul	4
0300						3	3	
0310	24	87 35 359			1	.Spacer sleeve	.Distanshylsa	5
0320	25	87 34 477			1	.Sleeve	.Hylsa	4
0330	26	87 25 327			1	.Gear	.Kugghjul	4
0340						4	4	
0350	28	87 48 261			1	.Roller bearing	.Rullager	3
0360	29	87 47 180			1	.Gear	.Kugghjul	4
0370						5	5	
0380	30	87 35 516			1	.Nut	.Mutter	5

1. Not as separate spare part. Ej som separat reservdel.

MASTER INDEX

0	General	1-A02
2	Engine	1-C02
3A	Electrical systems, instruments	1-F02
4	Transmission	1-I02
5	Brakes	1-K02
6	Front assembly, Steering	1-L02
7	Suspension, Wheels	2-A02
8A	Body, external	2-B02
8B	Body, internal	2-F02
8C	Body, heating and ventilation	2-H02
8D	Tool, Labels	2-I02
9	Accessories	2-J02
10	Numerical register	3-A02

4 GROUP INDEX

Clutch	1-I06
Clutch control	1-I08
Gear box, manual	1-I10
Gear box control, manual	1-I24
Gear box, automatic	1-J08
Gear box control, automatic	1-J16
Complete sets	1-J20

1-I22

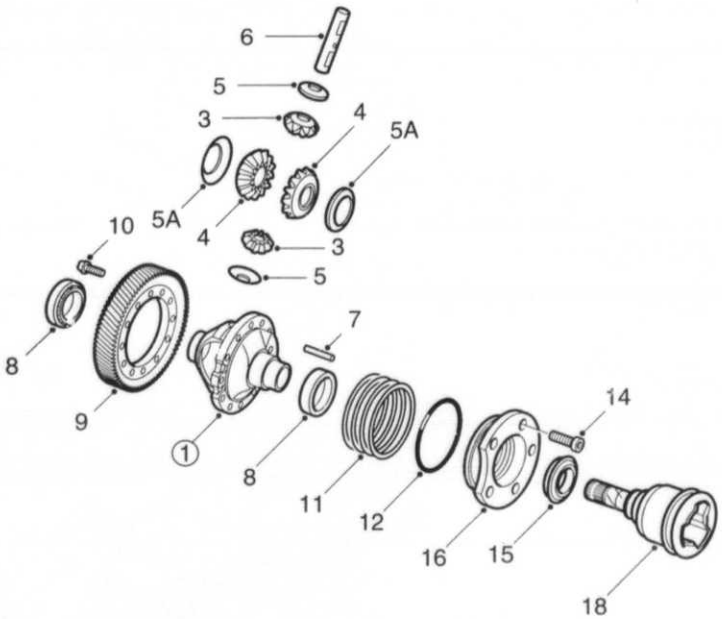

F8719 CAC97
04/0350

0350	Pos	Part No/Art nr	K S	Notes/Anmärkningar	Qty/ Antal	Description	Benämning	S L
0010				See page 4-009, 1-I10		Gear box, manual	Växellåda, manuell	
0020				See page 4-031, 1-J08		Gear box, automatic	Växellåda, automatisk	
0030	1	87 81 908		M	1	.Differential	.Differential	6
0040	3	87 44 088		1), M	2	..Differential pinion	..Differentialdrev	4
0050	4	87 44 856		1), M	2	..Differential pinion	..Differentialdrev	4
0060	5	87 31 788		1), M	2	..Washer	..Bricka	3
0070	5A	87 45 614		1), M	2	..Washer	..Bricka	3
0080	6	87 47 255		1), M	1	..Differential shaft	..Differentialaxel	5
0090	7	79 18 584		1), M	1	..Roll pin	..Spännstift	5
0100	8	87 34 568		M	2	.Roller bearing	.Rullager	3
0110	9	87 49 012		4-CYL, M	1	.Gear	.Kugghjul	5
0130	10	46 85 350		M	11	.Screw	.Skruv	5
0140	11	87 34 618		M, 0,10 MM	X	.Adjusting washer	.Justerbricka	5
0150	11	87 34 626		M, 0,15 MM	X	.Adjusting washer	.Justerbricka	5
0160	11	87 34 634		M, 0,30 MM	X	.Adjusting washer	.Justerbricka	5
0170	11	87 34 642		M, 0,50 MM	X	.Adjusting washer	.Justerbricka	5
0180	11	87 42 447		M, 1,00 MM	X	.Adjusting washer	.Justerbricka	5
0190	12	80 47 144		M	1	.O-ring	.O-ring	2
0200	14	80 59 792		M	5	.Screw	.Skruv	5
0210	15	87 32 117		M	2	.Seal	.Tätning	5
0220	16	87 42 876		M	1	.Bearing seat	.Lagersäte	5
0240	18			See page 4-029, 1-J06		Companion flange	Medbringare	

1. Not as separate spare part. Ej som separat reservdel.

MASTER INDEX

0	General	1-A02
2	Engine	1-C02
3A	Electrical systems, instruments	1-F02
4	Transmission	1-I02
5	Brakes	1-K02
6	Front assembly, Steering	1-L02
7	Suspension, Wheels	2-A02
8A	Body, external	2-B02
8B	Body, internal	2-F02
8C	Body, heating and ventilation	2-H02
8D	Tool, Labels	2-I02
9	Accessories	2-J02
10	Numerical register	3-A02

4 GROUP INDEX

Clutch	1-I06
Clutch control	1-I08
Gear box, manual	1-I10
Gear box control, manual	1-I24
Gear box, automatic	1-J08
Gear box control, automatic	1-J16
Complete sets	1-J20

1-I24

Gear shift lever
Växelspak

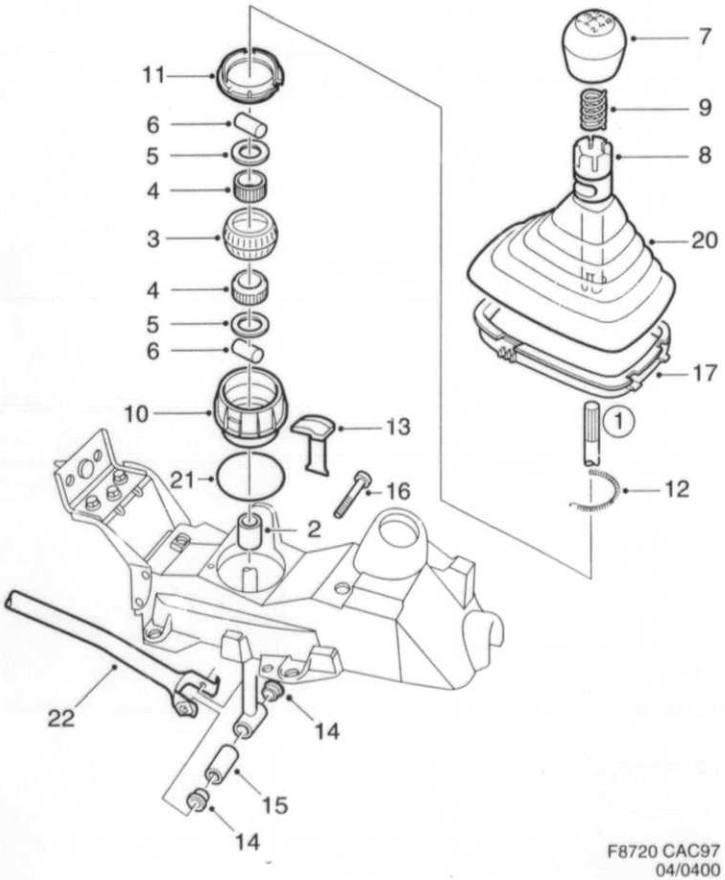

F8720 CAC97
04/0400

0400	Pos	Part No/Art nr	K S	Notes/Anmärkningar	Qty/ Antal	Description	Benämning	S L
0020	1	49 26 507			1	Gear lever	Växelspak	
0025	2	49 26 499			1	.Lever stop	.Spakstopp	
0030	3	40 27 876			1	.Ball	.Kula	5
0040	4	40 27 892			2	.Bushing	.Bussning	3
0050	5	41 21 588			2	.Washer	.Bricka	4
0060	6	46 85 657			2	.Roll pin	.Spännstift	
0070	7	45 78 357			1	Knob	Knopp	
0080	7	45 78 928			1	Knob	Knopp	
0090						leather	läder	
0100	8	45 79 793			1	Companion flange	Medbringare	3
0110	9	45 79 785			1	Spring	Fjäder	5
0120	10	44 77 824			1	Ball socket	Kulskål	6
0130	11	40 27 850			1	Ball socket	Kulskål	6
0140	12	40 27 942			1	Spring	Fjäder	5
0150	13	44 90 314			1	Reverse lock	Backspärr	5
0160	14	75 59 875			2	Bushing	Bussning	3
0170	15	75 77 729			1	Spacer	Distans	3
0180	16	80 83 966			1	Screw	Skruv	5
0190	17	45 78 407		LHD	1	Frame	Ram	
0200	17	45 78 399		RHD	1	Frame	Ram	
0210	18	46 25 091			1	Bracket	Konsol	6
0220	19	79 72 490			1	Rivet	Nit	5
0230	20	47 77 322			1	Gaiter	Damask	6
0240	20	45 79 801			1	Gaiter	Damask	3
0250						leather	läder	
0260	21	79 67 912			1	O-ring	O-ring	2
0270	22			See page 4-025, 1-J02		Gear rod	Växelstång	

MASTER INDEX

0	General	1-A02
2	Engine	1-C02
3A	Electrical systems, instruments	1-F02
4	Transmission	1-I02
5	Brakes	1-K02
6	Front assembly, Steering	1-L02
7	Suspension, Wheels	2-A02
8A	Body, external	2-B02
8B	Body, internal	2-F02
8C	Body, heating and ventilation	2-H02
8D	Tool, Labels	2-I02
9	Accessories	2-J02
10	Numerical register	3-A02

4 GROUP INDEX

Clutch	1-I06
Clutch control	1-I08
Gear box, manual	1-I10
Gear box control, manual	1-I24
Gear box, automatic	1-J08
Gear box control, automatic	1-J16
Complete sets	1-J20

1 -J02

Gear rod
Växelstång

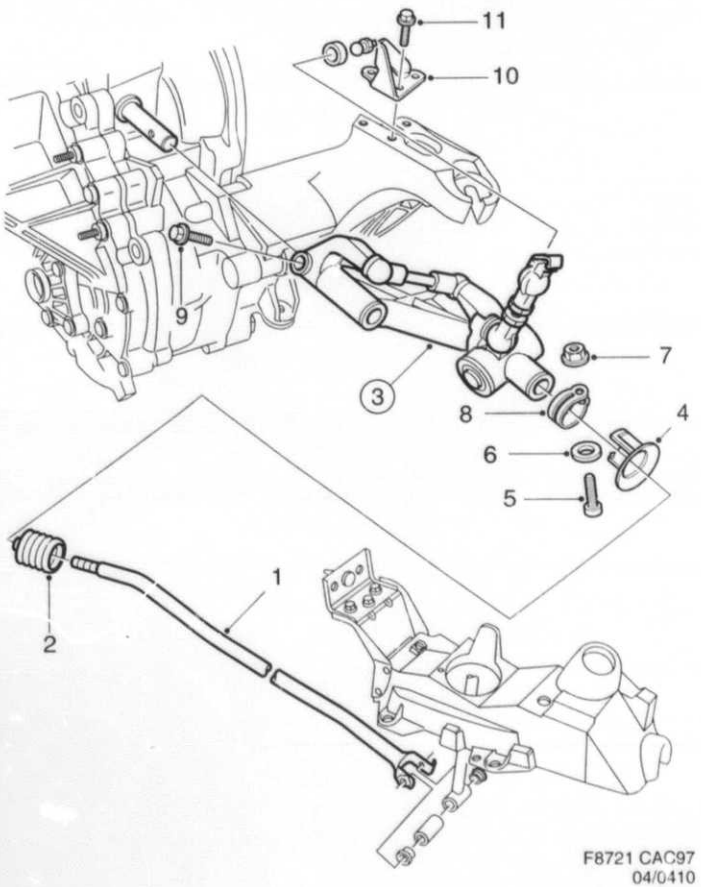

0410	Pos	Part No/Art nr	K S	Notes/Anmärkningar	Qty/ Antal	Description	Benämning	S L
0010	1	45 78 431			1	Gear rod	Växelstång	5
0020	2	42 82 331			1	Gaiter	Damask	5
0030	3	45 78 282			1	Linkage	Länkage	
0040	4	42 82 372			1	.Cone fitting	.Styrkona	
0050	5	75 41 907			1	.Screw	.Skruv	5
0060	6	80 29 985			1	.Washer	.Bricka	5
0070	7	79 75 501			1	.Nut	.Mutter	5
0080	8	93 48 533			1	.Clamp	.Klammer	5
0090	9	79 78 190			1	Screw	Skruv	5
0100	10	45 80 197			1	Bracket	Konsol	
0110	11	79 78 109			3	Screw	Skruv	5

MASTER INDEX

0	General	1-A02
2	Engine	1-C02
3A	Electrical systems, instruments	1-F02
4	Transmission	1-I02
5	Brakes	1-K02
6	Front assembly, Steering	1-L02
7	Suspension, Wheels	2-A02
8A	Body, external	2-B02
8B	Body, internal	2-F02
8C	Body, heating and ventilation	2-H02
8D	Tool, Labels	2-I02
9	Accessories	2-J02
10	Numerical register	3-A02

4 GROUP INDEX

Clutch	1-I06
Clutch control	1-I08
Gear box, manual	1-I10
Gear box control, manual	1-I24
Gear box, automatic	1-J08
Gear box control, automatic	1-J16
Complete sets	1-J20

1 -J04

Gear shift housing
Växelspakshus

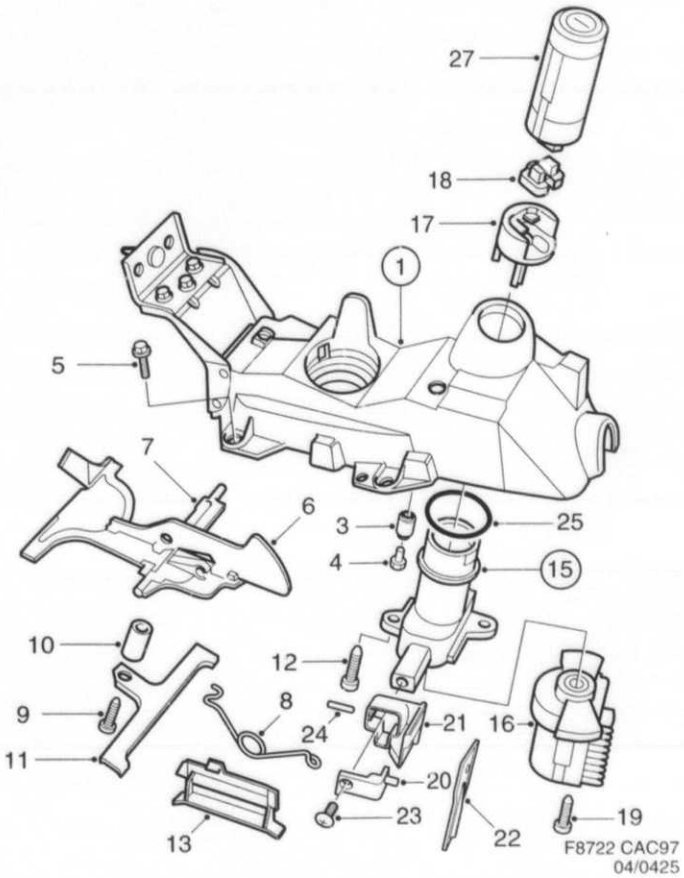

0425	Pos	Part No/Art nr	K S	Notes/Anmärkningar	Qty/ Antal	Description	Benämning	S L
0010	1	45 80 031			1	Gear shift housing	Växelspakshus	8
0020	2	40 87 250			1	.Rivet nut	.Nitmutter	5
0030	3	43 87 346			2	.Rubber bushing	.Gummibussning	
0040	4	43 87 452			2	.Cap	.Hatt	
0050	5	79 78 430			4	Screw	Skruv	
0060	6	43 87 320			1	Lock plate	Låsplåt	
0070	7	43 87 692			1	.Bracket	.Fäste	
0080	8	43 87 338			1	Spring	Fjäder	
0090	9	43 87 353			1	Bracket	Hållare	
0100	10	43 87 908			1	Spacer	Distans	
0110	11	40 87 367			1	Lock screw	Låsskruv	5
0120	12	79 82 176			2	Screw	Skruv	5
0130	13	43 87 684			1	Deflection limiter	Utslagsbegränsare	
0140	15	43 87 742			1	Ignition switch	Tändlås	
0150	16	44 09 553			1	.Contact	.Kontakt	4
0160	17	*44 90 728*		1) NLS	1	.Companion flange	.Medbringare	
0170	18	*44 90 736*		1) NLS	1	.Clutch	.Koppling	
0180	19	80 59 230			2	.Screw	.Skruv	5
0190	20	43 87 775			1	Companion flange	Medbringare	
0200	21	43 87 759			1	Carrier	Bärare	
0210	22	43 87 767			1	Top label	Ryttare	
0220	23	40 87 268			1	Lock screw	Låsskruv	5
0230	24	79 56 154			1	Roll pin	Spännstift	5
0240	25	79 72 797			1	O-ring	O-ring	2
0250	27			See page 8A-045, 2-C22		Lock cylinder	Låscylinder	

1. Not as separate spare part. Ej som separat reservdel.

MASTER INDEX

0	General	1-A02
2	Engine	1-C02
3A	Electrical systems, instruments	1-F02
4	Transmission	1-I02
5	Brakes	1-K02
6	Front assembly, Steering	1-L02
7	Suspension, Wheels	2-A02
8A	Body, external	2-B02
8B	Body, internal	2-F02
8C	Body, heating and ventilation	2-H02
8D	Tool, Labels	2-I02
9	Accessories	2-J02
10	Numerical register	3-A02

4 GROUP INDEX

Clutch	1-I06
Clutch control	1-I08
Gear box, manual	1-I10
Gear box control, manual	1-I24
Gear box, automatic	1-J08
Gear box control, automatic	1-J16
Complete sets	1-J20

1-J06 Drive shafts, outer and inner universal joint — Drivaxlar, yttre och inre knut

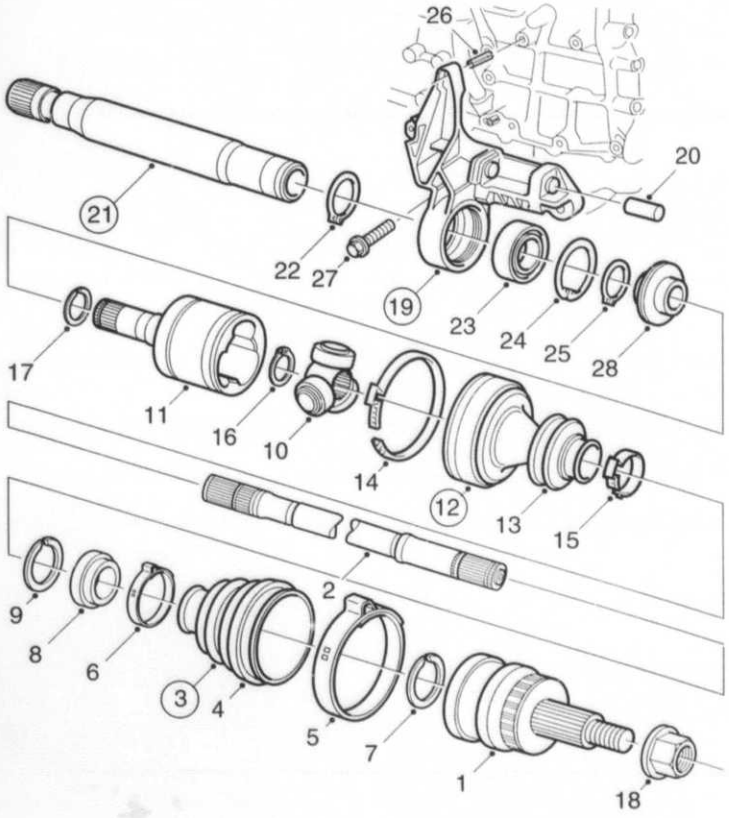

F8723 CAC97
04/0450

0450	Pos	Part No/Art nr	K S	Notes/Anmärkningar	Qty/ Antal	Description	Benämning	S L
0010	1	46 86 960			2	Universal joint	Drivknut	4
0020	2	46 86 887			2	Drive shaft	Drivaxel	5
0030	3	89 94 154		See page 4-043, 1-J20	2	Bellows kit	Bälgsats	3
0040	4	46 86 986		1)	1	.Bellows	.Bälg	3
0050	5	46 87 018			1	.Clamp	.Klämma	3
0060	6	46 87 000			1	.Clamp	.Klämma	3
0070	7	46 86 978			1	Lock ring	Låsring	5
0080	8	46 87 091			2	Spacer ring	Distansring	
0090	9	46 86 994			2	Spring washer	Fjäderbricka	
0100	10	46 86 895			2	Companion flange	Medbringare	3
0110	11	46 86 911			2	Companion flange	Medbringare	5
0120	12	89 94 170		See page 4-043, 1-J20	1	Bellows kit	Bälgsats	3
0130	13	46 86 945		1)	1	.Bellows	.Bälg	3
0140	14	46 86 937			1	.Clamp	.Klämma	3
0150	15	46 86 952			1	.Clamp	.Klämma	3
0160	16	46 86 903			2	Lock ring	Låsring	5
0170	17	46 86 929			2	Lock ring	Låsring	5
0180	18	89 65 360			2	Lock nut	Låsmutter	3
0190	19	47 77 967		M	1	Bearing bracket	Lagerbock	5
0200	19	47 77 959		A	1	Bearing bracket	Lagerbock	5
0210	20	75 93 080			1	.Bushing	.Bussning	6
0220	21	49 26 580		4-CYL	1	Countershaft	Mellanaxel	5
0225	21	49 26 580		6-CYL, A	1	Countershaft	Mellanaxel	5
0230	22	93 78 332			1	.Retaining ring	.Spårring	5
0240	23	93 81 450			1	Ball bearing	Kullager	3
0250	24	79 73 738			1	Retaining ring	Spårring	5
0260	25	93 78 332			1	Retaining ring	Spårring	5
0270	26	79 74 074			2	Cotter pin	Fjäderpinne	5
0280	27	79 78 224			3	Screw	Skruv	5
0290	28	45 78 241			1	Sealing ring	Tätningsring	2

1. Not as separate spare part. Ej som separat reservdel.

MASTER INDEX

0	General	1-A02
2	Engine	1-C02
3A	Electrical systems, instruments	1-F02
4	Transmission	1-I02
5	Brakes	1-K02
6	Front assembly, Steering	1-L02
7	Suspension, Wheels	2-A02
8A	Body, external	2-B02
8B	Body, internal	2-F02
8C	Body, heating and ventilation	2-H02
8D	Tool, Labels	2-I02
9	Accessories	2-J02
10	Numerical register	3-A02

4 GROUP INDEX

Clutch	1-I06
Clutch control	1-I08
Gear box, manual	1-I10
Gear box control, manual	1-I24
Gear box, automatic	1-J08
Gear box control, automatic	1-J16
Complete sets	1-J20

1-J08

Gear box assy
Automatic

Växellåda kpl
Automatisk

	Pos	Part No/Art nr	K S	Notes/Anmärkningar	Qty/ Antal	Description	Benämning	S L
0500								
0010	1	47 77 892		7), B205 MARKED: FA 47A03	1	Gearbox	Växellåda	8
0015								
0020								
0030	1	45 78 563		7), B235E MARKED: FA 47A01	1	Gearbox	Växellåda	8
0040								

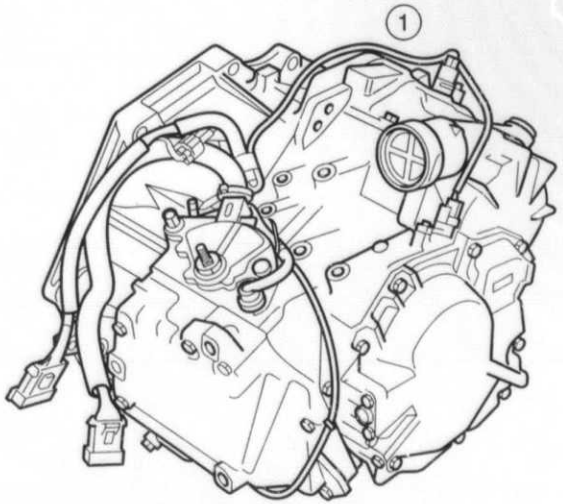

F8724 CAC97
04/0500

7. Also available as exchange unit. Finns även som utbytesenhet.

MASTER INDEX

0	General	1-A02
2	Engine	1-C02
3A	Electrical systems, instruments	1-F02
4	Transmission	1-I02
5	Brakes	1-K02
6	Front assembly, Steering	1-L02
7	Suspension, Wheels	2-A02
8A	Body, external	2-B02
8B	Body, internal	2-F02
8C	Body, heating and ventilation	2-H02
8D	Tool, Labels	2-I02
9	Accessories	2-J02
10	Numerical register	3-A02

4 GROUP INDEX

Clutch	1-I06
Clutch control	1-I08
Gear box, manual	1-I10
Gear box control, manual	1-I24
Gear box, automatic	1-J08
Gear box control, automatic	1-J16
Complete sets	1-J20

1-J10 Converter housing, converter / Momentomvandlarhus, momentomvandlare

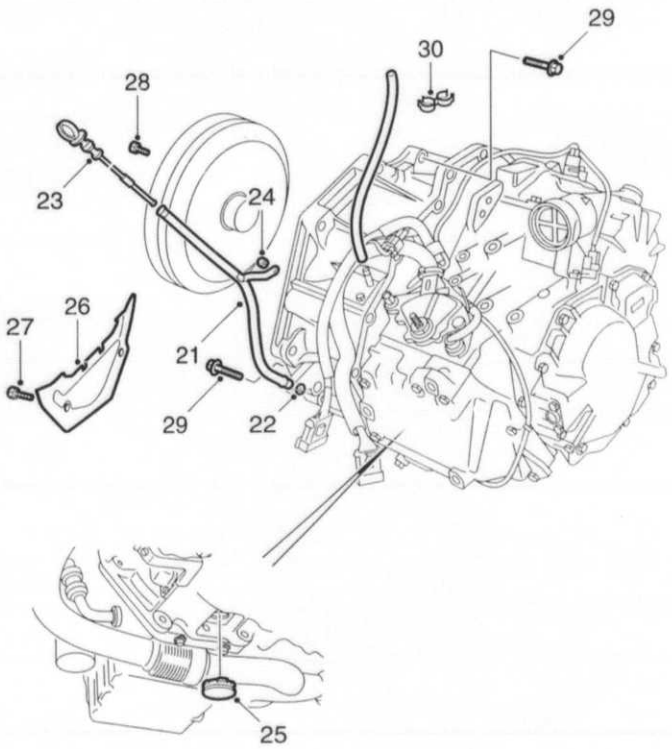

F8725 CAC97
04/0550

0550	Pos	Part No/Art nr	K S	Notes/Anmärkningar	Qty/ Antal	Description	Benämning	S L
0010				See page 4-031, 1-J08		Gear box, automatic	Växellåda, automatisk	
0100	20	42 38 242			1	Bleeder hose	Urluftningsslang	
0110	21	45 80 635			1	Tube	Rör	5
0120	22	42 38 424			1	O-ring	O-ring	3
0130	23	45 80 395			1	Dipstick	Mätsticka	5
0140	24	80 74 288			1	Nut	Mutter	5
0150	25	43 46 664			1	Cover	Täcklock	
0160	26	45 73 069		4-CYL	1	Baffle	Stänkskydd	6
0170	27	46 85 475		4-CYL	2	Hexagon screw	Sexkantsskruv	5
0180	28	45 73 309			6	Screw	Skruv	5
0190	29	79 84 297			5	Screw	Skruv	5
0200	30	46 85 905			1	Clamp	Klämma	6

MASTER INDEX

0	General	1-A02
2	Engine	1-C02
3A	Electrical systems, instruments	1-F02
4	Transmission	1-I02
5	Brakes	1-K02
6	Front assembly, Steering	1-L02
7	Suspension, Wheels	2-A02
8A	Body, external	2-B02
8B	Body, internal	2-F02
8C	Body, heating and ventilation	2-H02
8D	Tool, Labels	2-I02
9	Accessories	2-J02
10	Numerical register	3-A02

4 GROUP INDEX

Clutch	1-I06
Clutch control	1-I08
Gear box, manual	1-I10
Gear box control, manual	1-I24
Gear box, automatic	1-J08
Gear box control, automatic	1-J16
Complete sets	1-J20

1--J12

0E00	Pos	Part No/Art nr	K S	Notes/Anmärkningar	Qty/ Antal	Description	Benämning	S L
0010				See page 4-031, 1-J08		Gear box, automatic	Växellåda, automatisk	
0020	1	87 38 411			1	•Flange screw	•Flänsskruv	5
0100	20	45 80 247			1	Bracket	Fäste	
0110	21	79 78 091			2	Screw	Skruv	5

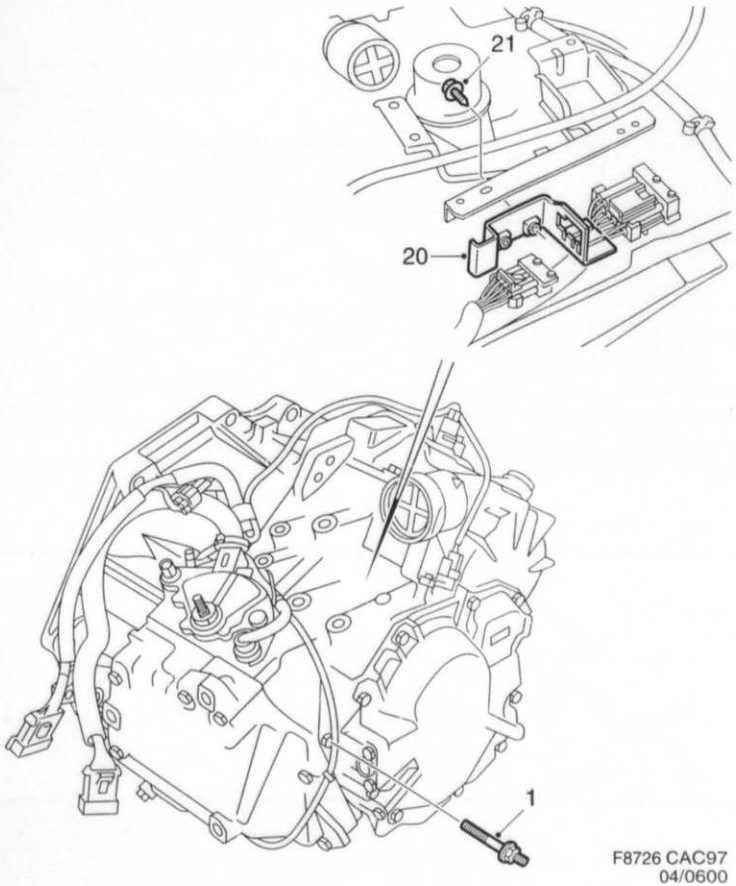

F8726 CAC97
04/0600

MASTER INDEX

0	General	1-A02
2	Engine	1-C02
3A	Electrical systems, instruments	1-F02
4	Transmission	1-I02
5	Brakes	1-K02
6	Front assembly, Steering	1-L02
7	Suspension, Wheels	2-A02
8A	Body, external	2-B02
8B	Body, internal	2-F02
8C	Body, heating and ventilation	2-H02
8D	Tool, Labels	2-I02
9	Accessories	2-J02
10	Numerical register	3-A02

4 GROUP INDEX

Clutch	1-I06
Clutch control	1-I08
Gear box, manual	1-I10
Gear box control, manual	1-I24
Gear box, automatic	1-J08
Gear box control, automatic	1-J16
Complete sets	1-J20

1-J14

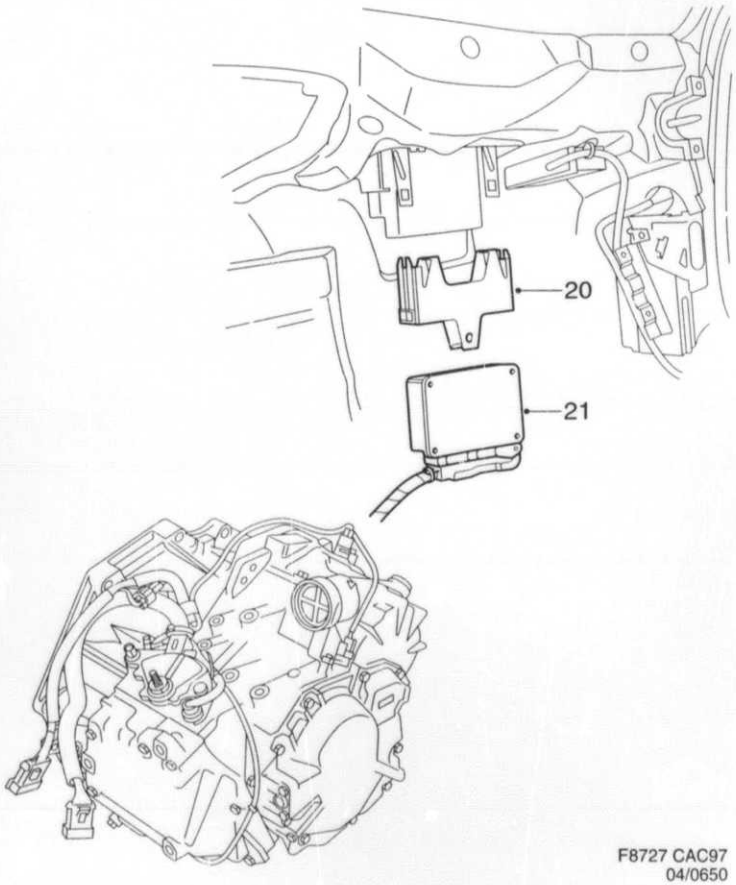

F8727 CAC97
04/0650

0650	Pos	Part No/Art nr	K S	Notes/Anmärkningar	Qty/ Antal	Description	Benämning	S L
0010				See page 4-031, 1-J08		Gear box, automatic	Växellåda, automatisk	
0100	20			See page 8B-011, 2-F12		Bracket	Fäste	
0110	21	45 78 597		B205F	1	Trans. control module	Styrdon	
0120	21	45 79 280		B235E	1	Trans. control module	Styrdon	

MASTER INDEX

0	General	1-A02
2	Engine	1-C02
3A	Electrical systems, instruments	1-F02
4	Transmission	1-I02
5	Brakes	1-K02
6	Front assembly, Steering	1-L02
7	Suspension, Wheels	2-A02
8A	Body, external	2-B02
8B	Body, internal	2-F02
8C	Body, heating and ventilation	2-H02
8D	Tool, Labels	2-I02
9	Accessories	2-J02
10	Numerical register	3-A02

4 GROUP INDEX

Clutch	1-I06
Clutch control	1-I08
Gear box, manual	1-I10
Gear box control, manual	1-I24
Gear box, automatic	1-J08
Gear box control, automatic	1-J16
Complete sets	1-J20

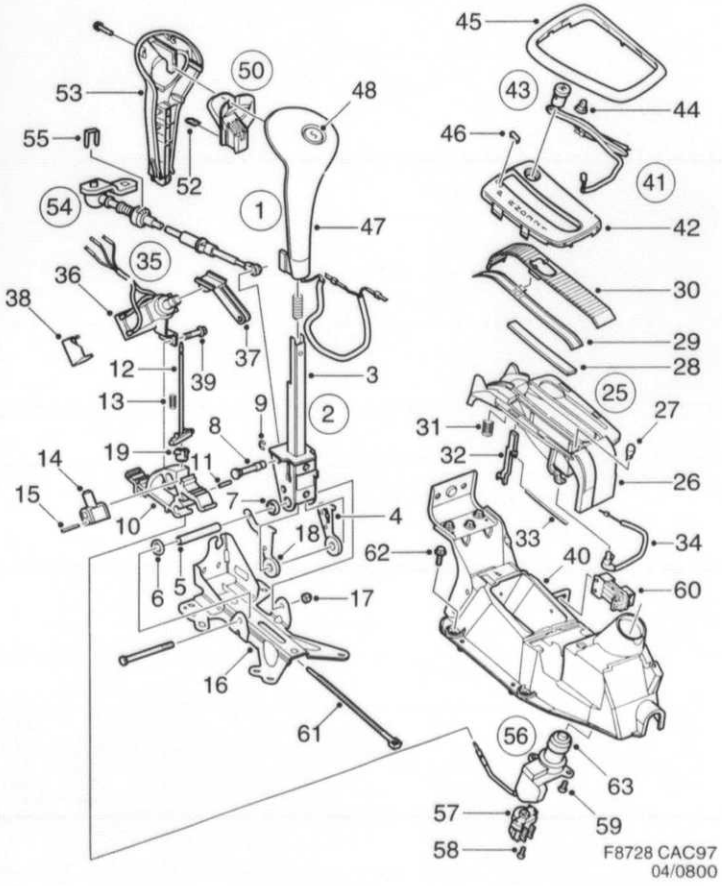

Gear box control, autom.

1-J16

Gear selector lever

Växlådsmanövr., automat

Växelväljarspak

0800	Pos	Part No/Art nr	KS	Notes/Anmärkningar	Qty/Antal	Description	Benämning	SL
0010	1	47 77 702		LHD	1	Gear changing unit	Växelväljarenhet	
0020	1	47 77 710		LHD, US, CA	1	Gear changing unit	Växelväljarenhet	
0030	1	47 77 686		RHD	1	Gear changing unit	Växelväljarenhet	
0040	1	47 77 694		RHD, AU, PA	1	Gear changing unit	Växelväljarenhet	
0050	2	47 77 629			1	.Gear lever	.Växelspak	
0060	3	45 79 405		1)	1	..Gear lever	..Växelspak	
0070	4	47 77 439		1)	1	..Striker plate	..Låsbleck	
0080	5	47 77 470		1)	1	..Leading tube	..Ledrör	
0090	6	47 77 504		1)	2	..Lock washer	..Spärrbricka	5
0100	7	47 77 413		1)	2	..Bushing	..Bussning	
0110	8	47 77 520		1)	1	..Ball	..Kula	5
0120	9	81 23 473			1	..E-circlip	..Spärryttare	5
0130	10	47 77 405		1)	1	..Gear sel. pos. profile	..Växellägesprofil	
0140	11	47 77 496		1)	1	..Spring pin	..Rörpinne	
0150	12	47 77 454		1)	1	..Control rod	..Manöverstång	
0155	13	47 77 462		1)	1	..Spring	..Fjäder	
0160	14	47 77 488		1)	1	..Dog	..Glidsko	
0170	15	47 77 199			1	..E-circlip	..Spärryttare	
0180	16	47 77 447		1)	1	..Floor console	..Golvadapter	
0190	17	80 73 512			1	..Lock nut	..Låsmutter	3
0200	18	47 77 421		1)	1	..Striker plate	..Låsbleck	
0210	19	47 77 512			1	..Damping element	..Dämpgummi	5
0250	25	47 77 637		LHD	1	.Light box	.Ljusbox	
0260	25	47 77 645		RHD	1	.Light box	.Ljusbox	
0270	26	47 77 538		1), LHD	1	..Light box	..Ljusbox	
0280	26	47 77 736		1), RHD	1	..Light box	..Ljusbox	
0290	27	47 77 181			1	..Bulb	..Glödlampa	2
0300	28	47 77 546		1)	1	..Grid	..Raster	5
0310	29	47 77 553		1)	1	..Indicator strip	..Indikeringsremsa	5
0320	30	47 77 173		LHD	1	..Jalousie	..Jalusi	
0330	30	47 77 371		RHD	1	..Jalousie	..Jalusi	
0340	31	47 77 587			1	..Spring	..Fjäder	5
0350	32	47 77 579		1)	1	..Override arm	..Overridearm	5
0360	33	47 77 561		1)	1	..Spring	..Fjäder	5
0370	34			1)	1	..Ground cable	..Jordkabel	
0380	35	47 77 678			1	.Solenoid	.Solenoid	5
0381	36	45 79 504		1)	1	..Solenoid	..Solenoid	5
0382	37			1)	1	..	..	
0383	38	47 77 595		1)	1	..Protecting casing	..Skyddskåpa	5
0384	39	79 82 176			1	..Screw	..Skruv	5
0385	40	47 77 751			1	.Gear shift housing	.Växelspakshus	
0386	41	47 77 660		LHD	1	Cover	Täcklock	
0390	41	47 77 652		RHD	1	Cover	Täcklock	
0400	42	45 79 496		LHD	1	.Cover	.Täcklock	
0410	42	45 79 538		RHD	1	.Cover	.Täcklock	
0420	43	45 79 447			1	.Winter switch	.Vinterknapp	6
0425	44	47 77 165			1	..Bulb	..Glödlampa	
0430	45	45 79 546		LHD	1	.Rim	.Sarg	
0440	45	45 80 759		RHD	1	.Rim	.Sarg	
0450	46	47 77 611			1	.Cover	.Lock	
0460	47	45 79 462			1	Outer casing	Hölje	6
0470	47	45 80 692			1	Outer casing	Hölje	6
0480						leather	läder	
0490	48	45 79 454			1	Sport switch	Sportknapp	6
0530	50	47 77 603			1	Button	Knapp	
0550	52	47 77 199			1	.E-circlip	.Spärryttare	
0560	53	45 79 470			1	Outer casing	Hölje	6
0570	53	45 80 684			1	Outer casing	Hölje	6
0580						leather	läder	
0590	54	47 77 728			1	Gear selector cable	Växelväljarkabel	
0600	55	47 77 256			1	.Clip	.Clips	

1. Not as separate spare part. Ej som separat reservdel.

MASTER INDEX

0	General	1-A02
2	Engine	1-C02
3A	Electrical systems, instruments	1-F02
4	Transmission	1-I02
5	Brakes	1-K02
6	Front assembly, Steering	1-L02
7	Suspension, Wheels	2-A02
8A	Body, external	2-B02
8B	Body, internal	2-F02
8C	Body, heating and ventilation	2-H02
8D	Tool, Labels	2-I02
9	Accessories	2-J02
10	Numerical register	3-A02

4 GROUP INDEX

Clutch	1-I06
Clutch control	1-I08
Gear box, manual	1-I10
Gear box control, manual	1-I24
Gear box, automatic	1-J08
Gear box control, automatic	1-J16
Complete sets	1-J20

1-J18 Gear selector lever / Växelväljarspak

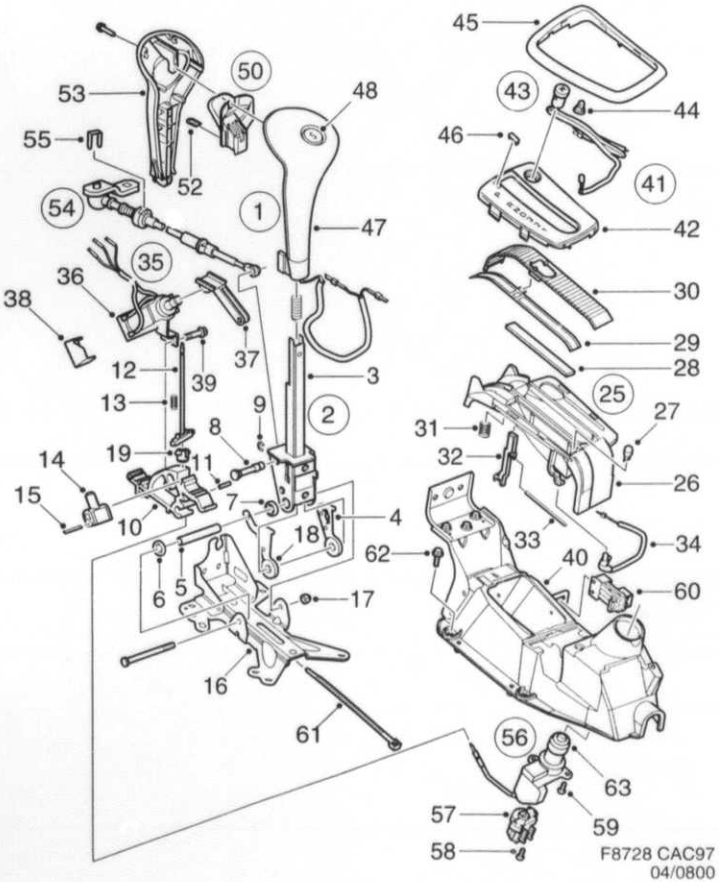

0800	Pos	Part No/Art nr	K S	Notes/Anmärkningar	Qty/ Antal	Description	Benämning	S L
0610	56	45 79 421			1	Ignition switch	Tändlås	
0620	57	44 09 553			1	.Contact	.Kontakt	4
0630	58	80 59 230			2	.Screw	.Skruv	5
0640	59	80 59 578			2	.Screw	.Skruv	5
0650	60	41 13 809			1	Connector housing	Kontakthus	4
0660	61	79 71 880			2	Tensioning band	Spännband	4
0670	62	79 78 430			4	Screw	Skruv	
0680	63			See page 8A-045, 2-C22		Lock cylinder	Låscylinder	

MASTER INDEX

0	General	1-A02
2	Engine	1-C02
3A	Electrical systems, instruments	1-F02
4	Transmission	1-I02
5	Brakes	1-K02
6	Front assembly, Steering	1-L02
7	Suspension, Wheels	2-A02
8A	Body, external	2-B02
8B	Body, internal	2-F02
8C	Body, heating and ventilation	2-H02
8D	Tool, Labels	2-I02
9	Accessories	2-J02
10	Numerical register	3-A02

4 GROUP INDEX

Clutch	1-I06
Clutch control	1-I08
Gear box, manual	1-I10
Gear box control, manual	1-I24
Gear box, automatic	1-J08
Gear box control, automatic	1-J16
Complete sets	1-J20

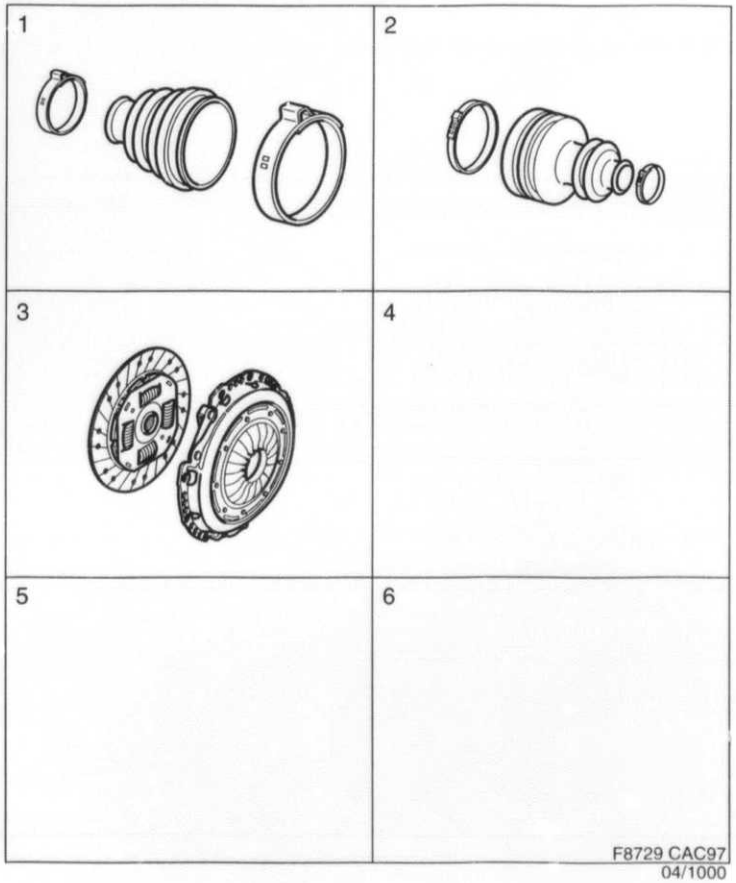

Complete set

1 -J20 *Transmission*

Satser

Kraftöverföring

1000	Pos	Part No/Art nr	K S	Notes/Anmärkningar	Qty/ Antal	Description	Benämning	S L
0010	1	89 94 154			1	Bellows kit	Bälgsats	3
0020		46 86 986			1	.Bellows	.Bälg	3
0030		46 87 018			1	.Clamp	.Klämma	3
0040		46 87 000			1	.Clamp	.Klämma	3
0050								
0060	2	89 94 162			1	Bellows kit	Bälgsats	3
0070		46 86 879			1	.Bellows	.Bälg	3
0080		46 87 042			1	.Clamp	.Klämma	3
0090		46 86 846			1	.Clamp	.Klämma	3
0100								
0110	3	87 81 890			1	Clutch kit	Kopplingssats	6
0120		87 46 711			1	.Pressure plate	.Tryckskiva	2
0130		87 46 489			1	.Clutch disc	.Lamell	2

MASTER INDEX

0	General	1-A02
2	Engine	1-C02
3A	Electrical systems, instruments	1-F02
4	Transmission	1-I02
5	Brakes	1-K02
6	Front assembly, Steering	1-L02
7	Suspension, Wheels	2-A02
8A	Body, external	2-B02
8B	Body, internal	2-F02
8C	Body, heating and ventilation	2-H02
8D	Tool, Labels	2-I02
9	Accessories	2-J02
10	Numerical register	3-A02

4 GROUP INDEX

Clutch	1-I06
Clutch control	1-I08
Gear box, manual	1-I10
Gear box control, manual	1-I24
Gear box, automatic	1-J08
Gear box control, automatic	1-J16
Complete sets	1-J20

5

Brakes
Bromsar
Frenos

1-K02

0041
0020
0040
0060
0080
0100
0160
0180
0200
0235
0240
0255
0260
0280
0290
0295

TABLE OF CONTENTS

Front wheel brake	5 : 5	1-K06
Rear wheel brake	5 : 7	1-K08
Footbrake system	5 : 9	1-K10
Hydraulic unit ABS	5 : 11	1-K12
Master cylinder and power brake unit	5 : 13	1-K14
Brake lines ABS	5 : 15	1-K16
Brake operation	5 : 17	1-K18
Parking brake system	5 : 19	1-K20
Complete sets		
Brakes		

MASTER INDEX

0	General	1-A02
2	Engine	1-C02
3A	Electrical systems, instruments	1-F02
4	Transmission	1-I02
5	Brakes	1-K02
6	Front assembly, Steering	1-L02
7	Suspension, Wheels	2-A02
8A	Body, external	2-B02
8B	Body, internal	2-F02
8C	Body, heating and ventilation	2-H02
8D	Tool, Labels	2-I02
9	Accessories	2-J02
10	Numerical register	3-A02

5 GROUP INDEX

Front wheel brake	1-K06
Rear wheel brake	1-K08
Footbrake system	1-K10
Parking brake system	1-K18
Complete sets	1-K20

0042
0300
0320
0340
0360
0380
0440
0460
0480
0515
0520
0535
0540
0560
0570
0575
0580
0600
0620
1120
1140
1160
1180
1200
1260
1280
1300
1335
1340
1355
1360
1380
1390
1395
1400
1410
1420

INNEHÅLLSFÖRTECKNING

Framhjulsbroms	5 : 5	1-K06
Bakhjulsbroms	5 : 7	1-K08
Fotbromssystem		
Hydralenhet ABS	5 : 9	1-K10
Huvudcylinder och vacuumservo	5 : 11	1-K12
Bromsledningar ABS	5 : 13	1-K14
Bromsmanövrering	5 : 15	1-K16
Parkeringsbromssystem	5 : 17	1-K18
Satser		
Bromsar	5 : 19	1-K20

SUMARIO

Freno del	5 : 5	1-K06
Freno tras	5 : 7	1-K08
Sistema de freno de pie		
Unidad hydraulico ABS	5 : 9	1-K10
Cylindro principal y servoasistencia	5 : 11	1-K12
Conductos de freno ABS	5 : 13	1-K14
Mando de freno de pie	5 : 15	1-K16
Sistema de freno de mano	5 : 17	1-K18
Juegos completos		
Frenos	5 : 19	1-K20

MASTER INDEX

0	General	1-A02
2	Engine	1-C02
3A	Electrical systems, instruments	1-F02
4	Transmission	1-I02
5	Brakes	1-K02
6	Front assembly, Steering	1-L02
7	Suspension, Wheels	2-A02
8A	Body, external	2-B02
8B	Body, internal	2-F02
8C	Body, heating and ventilation	2-H02
8D	Tool, Labels	2-I02
9	Accessories	2-J02
10	Numerical register	3-A02

5 GROUP INDEX

Front wheel brake	1-K06
Rear wheel brake	1-K08
Footbrake system	1-K10
Parking brake system	1-K18
Complete sets	1-K20

1-K06 *Front wheel brake* *Framhjulsbroms*

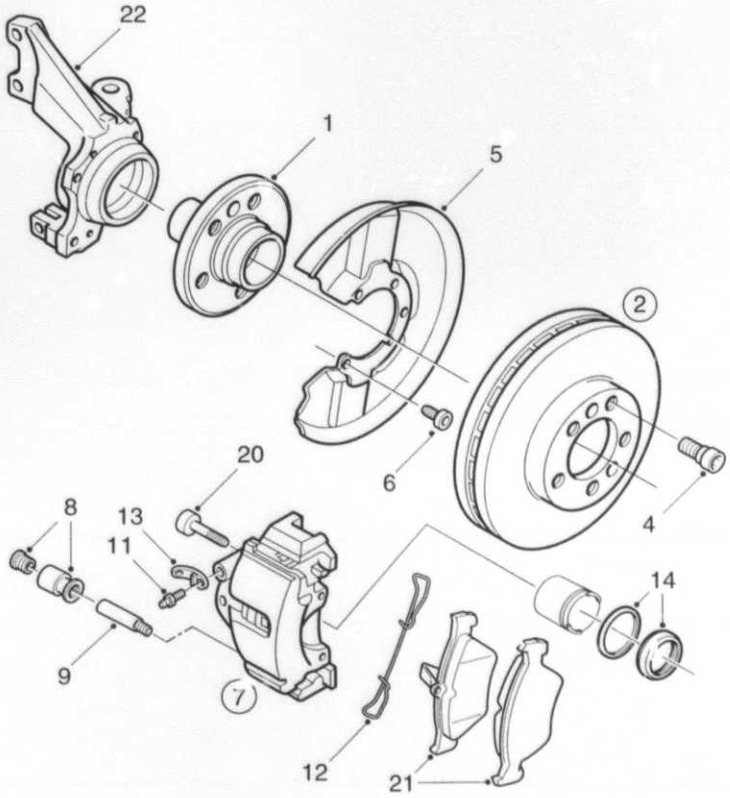

F8730 CAC97
05/0100

0100	Pos	Part No/Art nr	K S	Notes/Anmärkningar	Qty/ Antal	Description	Benämning	S L
0010	1	45 68 192			2	Wheel hub	Hjulnav	4
0020	2	48 39 320		See page 5-019, 1-K20	1	Brake disc	Bromsskiva	3
0040	4	42 49 751			2	Screw	Skruv	5
0050	5	50 56 676			2	Backing plate	Bromssköld	
0060	6	80 59 537			6	Screw	Skruv	5
0070	7	48 38 967		7), LH	1	Brake housing	Bromshus	4
0080	7	48 38 975		7), RH	1	Brake housing	Bromshus	4
0090	8	44 67 064		See page 5-019, 1-K20	2	.Guide	.Styrning	3
0100	9	89 69 651			1	.Slide pin	.Glidpinne	3
0110	11	44 67 007			1	.Bleed screw	.Luftningsskruv	2
0120	12	42 44 422			1	.Spring	.Fjäder	3
0130	13	44 67 015			1	.Protecting casing	.Skyddskåpa	3
0140	14	47 78 262		See page 5-021, 1-K22	1	.Gasket kit	.Packningsats	2
0200	20	46 47 194			4	Screw	Skruv	5
0210	21	48 39 924		See page 5-019, 1-K20	1	Brake pad kit	Bromsklotssats	1
0220	22			See page 6-005, 1-L06		Steering knuckle housing	Styrspindelhus	

7. Also available as exchange unit. Finns även som utbytesenhet.

MASTER INDEX

0	General	1-A02
2	Engine	1-C02
3A	Electrical systems, instruments	1-F02
4	Transmission	1-I02
5	Brakes	1-K02
6	Front assembly, Steering	1-L02
7	Suspension, Wheels	2-A02
8A	Body, external	2-B02
8B	Body, internal	2-F02
8C	Body, heating and ventilation	2-H02
8D	Tool, Labels	2-I02
9	Accessories	2-J02
10	Numerical register	3-A02

5 GROUP INDEX

Front wheel brake	1-K06
Rear wheel brake	1-K08
Footbrake system	1-K10
Parking brake system	1-K18
Complete sets	1-K20

1-K08 Rear wheel brake — Bakhjulsbroms

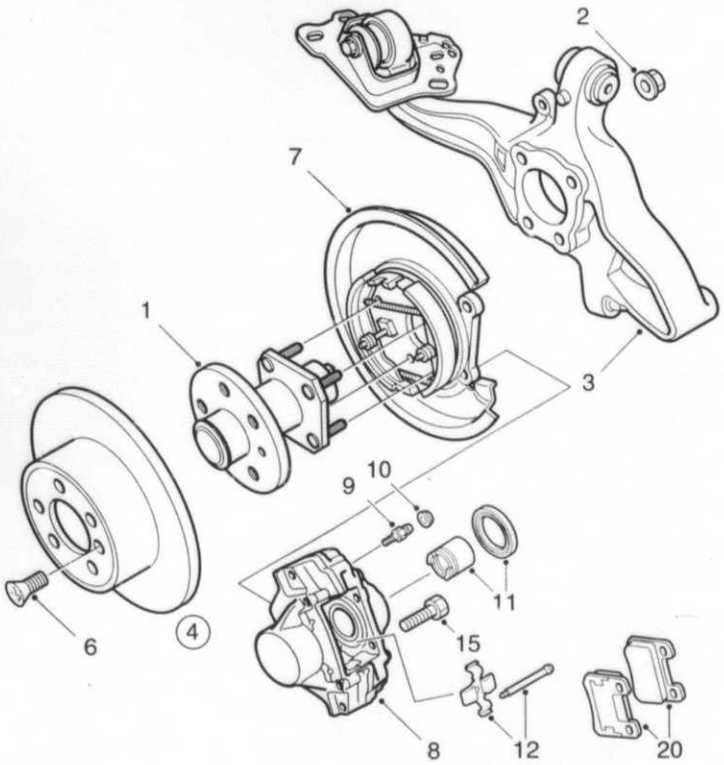

F8731 CAC97
05/0150

0150	Pos	Part No/Art nr	K S	Notes/Anmärkningar	Qty/ Antal	Description	Benämning	S L
0010	1	47 78 494			2	Wheel hub	Hjulnav	5
0020						with bearing	med lager	
0030						with sensor	med sensor	
0040	2	43 45 153			8	Flange lock nut	Flänslåsmutter	3
0050	3			See page 7-009, 2-A10		Cross stay	Tvärstag	
0060	4	48 39 338		See page 5-019, 1-K20	1	Brake disc	Bromsskiva	2
0070	6	80 55 998			2	Screw	Skruv	5
0080	7			See page 5-017, 1-K18		Handbrake	Handbroms	
0090	8	45 66 873		LH	1	Brake housing	Bromshus	
0095	8	45 66 881		RH	1	Brake housing	Bromshus	
0096	9	44 67 148			1	.Bleed screw	.Luftningsskruv	2
0097	10	89 08 576			1	.Protecting casing	.Skyddskåpa	3
0098	11	48 36 961		See page 5-021, 1-K22	1	.Sealing kit	.Tätningssats	
0099	12	49 08 497		See page 5-021, 1-K22	1	.Spring kit	.Fjädersats	2
0100	15	42 41 535			4	Screw	Skruv	5
0120	20	48 36 987		See page 5-021, 1-K22	1	Brake lining kit	Bromsbeläggsats	

MASTER INDEX

0	General	1-A02
2	Engine	1-C02
3A	Electrical systems, instruments	1-F02
4	Transmission	1-I02
5	Brakes	1-K02
6	Front assembly, Steering	1-L02
7	Suspension, Wheels	2-A02
8A	Body, external	2-B02
8B	Body, internal	2-F02
8C	Body, heating and ventilation	2-H02
8D	Tool, Labels	2-I02
9	Accessories	2-J02
10	Numerical register	3-A02

5 GROUP INDEX

Front wheel brake	1-K06
Rear wheel brake	1-K08
Footbrake system	1-K10
Parking brake system	1-K18
Complete sets	1-K20

1-K10

Hydraulic unit ABS

Hydraulenhet ABS

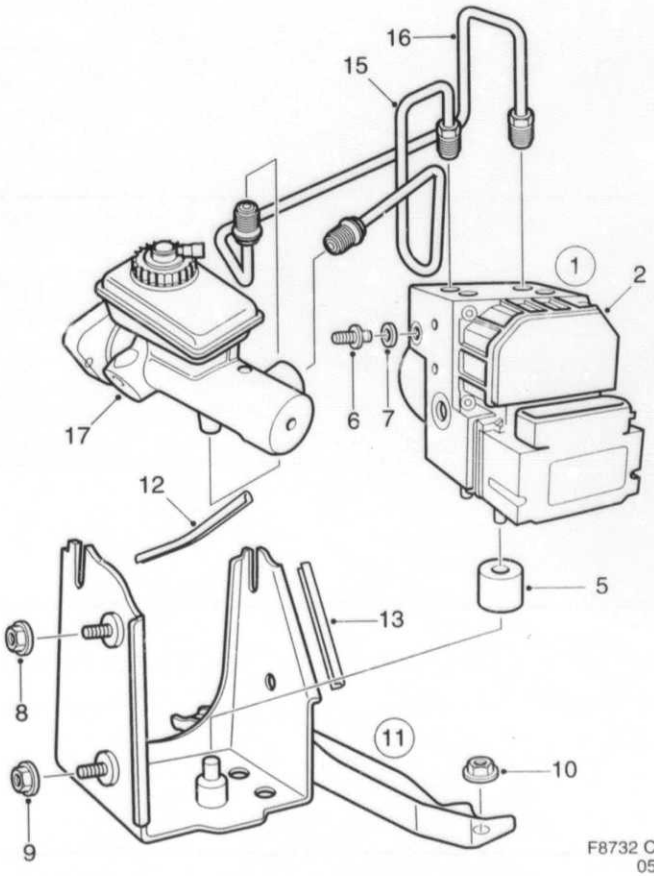

F8732 CAC97
05/0230

0230	Pos	Part No/Art nr	K S	Notes/Anmärkningar	Qty/ Antal	Description	Benämning	S L
0010	1	47 79 500			1	Hydraulic unit	Hydraulaggregat	6
0020	2	47 79 526		1)	1	.Electronic unit	.Elektronikenhet	5
0030	5	46 46 675			1	Support sleeve	Stödhylsa	5
0040	6	46 46 683			2	Support pin	Stödpinne	6
0050	7	46 46 691			3	Absorber	Dämpare	6
0060	8	79 77 952			2	Hexagon nut	Sexkantsmutter	5
0070	9	79 77 929			1	Nut	Mutter	5
0080	10	79 71 922			2	Nut	Mutter	3
0090	11	46 87 075			1	Bracket	Konsol	5
0093	12	82 78 558			1	.Protecting moulding	.Skyddslist	5
0095	13	82 78 558		CUT TO 78 MM	1	.Protecting moulding	.Skyddslist	5
0100	15	45 65 875		LHD	1	Brake pipe	Bromsrör	4
0110	15	45 65 917		RHD	1	Brake pipe	Bromsrör	4
0120	16	45 66 139		LHD	1	Brake pipe	Bromsrör	4
0130	16	45 66 147		RHD	1	Brake pipe	Bromsrör	4
0140	17			See page 5-009, 1-K10		Master cylinder	Huvudcylinder	

1. Not as separate spare part. Ej som separat reservdel.

MASTER INDEX

0	General	1-A02
2	Engine	1-C02
3A	Electrical systems, instruments	1-F02
4	Transmission	1-I02
5	Brakes	1-K02
6	Front assembly, Steering	1-L02
7	Suspension, Wheels	2-A02
8A	Body, external	2-B02
8B	Body, internal	2-F02
8C	Body, heating and ventilation	2-H02
8D	Tool, Labels	2-I02
9	Accessories	2-J02
10	Numerical register	3-A02

5 GROUP INDEX

Front wheel brake	1-K06
Rear wheel brake	1-K08
Footbrake system	1-K10
Parking brake system	1-K18
Complete sets	1-K20

1-K12

Footbrake system

Master cylinder and power brake unit

Fotbromssystem

Huvudcylinder och vacuumservo

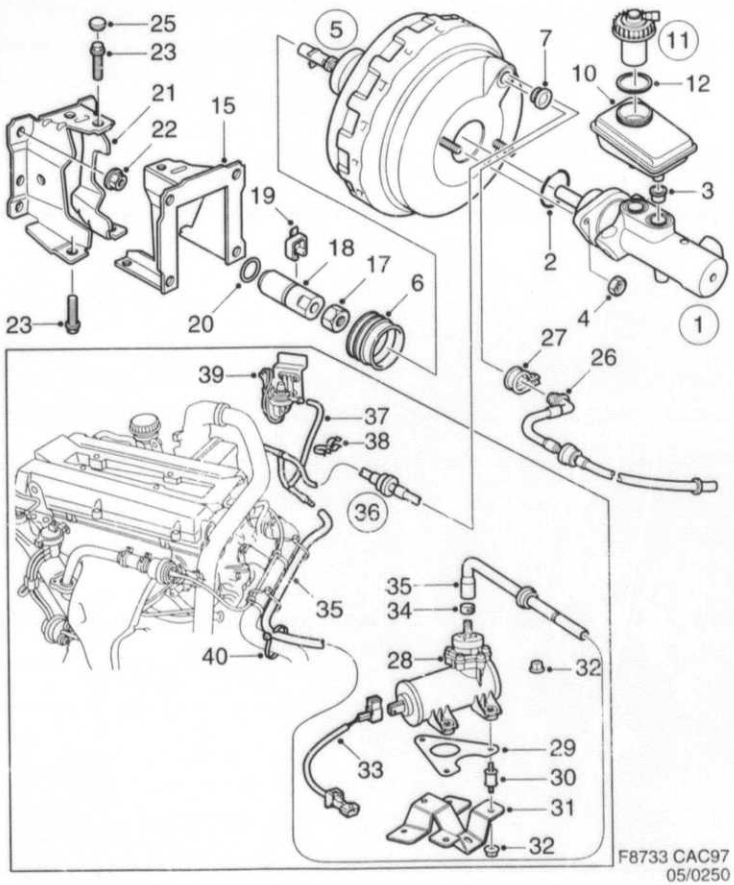

0250	Pos	Part No/Art nr	K S	Notes/Anmärkningar	Qty/ Antal	Description	Benämning	S L
0010	1	48 36 698		LHD	1	Master cylinder	Huvudcylinder	
0020	1	48 36 706		RHD	1	Master cylinder	Huvudcylinder	
0030	2	48 36 755			1	.Seal	.Tätning	
0040	3	48 36 730			2	.Plug	.Plugg	
0050	4	48 36 748			2	.Nut	.Mutter	
0060	5	48 36 656		LHD	1	Brake servo	Bromsservo	
0070	5	48 36 664		RHD	1	Brake servo	Bromsservo	
0080	6	48 36 672			1	.Bellows	.Bälg	
0090	7	48 36 680			1	.Grommet	.Genomföring	
0100	10	48 36 771		LHD	1	Reservoir	Behållare	
0110	10	48 36 789		RHD	1	Reservoir	Behållare	
0120	11	48 36 763		LHD	1	Cover	Lock	
0130	11	48 36 847		RHD	1	Cover	Lock	
0140	12			1)	1	.Sealing ring	.Tätningsring	
0150	15	45 67 012		LHD	1	Bracket	Konsol	5
0160	15	45 67 038		RHD	1	Bracket	Konsol	5
0170	16	79 71 922		LHD	4	Nut	Mutter	3
0180	16	79 71 922		RHD	6	Nut	Mutter	3
0190	17	43 45 120			1	Hexagon nut	Sexkantsmutter	5
0200	18	45 67 855		LHD	1	Adjusting nut	Justermutter	5
0210	18	45 67 863		RHD	1	Adjusting nut	Justermutter	5
0220	19	42 44 307		LHD	1	Return spring	Returfjäder	5
0230	20	45 68 580		RHD	1	O-ring	O-ring	2
0240	21	45 67 020		LHD	1	Bracket	Konsol	5
0250	21	45 67 046		RHD	1	Bracket	Konsol	5
0260	22	79 71 922			4	Nut	Mutter	3
0270	23	79 78 190		LHD	3	Screw	Skruv	5
0280	24	79 78 232		RHD	1	Screw	Skruv	5
0290	25	46 89 626			1	Plug	Plugg	5
0300	26	46 88 180		LHD	1	Vacuum pipe	Vakuumrör	5
0310	26	46 88 198		RHD	1	Vacuum pipe	Vakuumrör	5
0320	27			See page 2-031, 1-D08		Tube clamp	Rörklamma	
0330	28	46 46 220		4-CYL, A	1	Vacuum pump	Vakuumpump	
0340	29	49 08 075		4-CYL, A	1	Washer	Bricka	
0350	30	48 39 403		4-CYL, A	3	Vibration damper	Vibrationsdämpare	
0360	31	48 39 395		4-CYL, A	1	Bracket	Fäste	
0370	32	79 77 929		4-CYL, A	9	Nut	Mutter	5
0380	33			See page 3A-047, 1-G24		Cable harness	Ledningsnät	
0390	34	79 74 009		4-CYL, A	1	Hose clamp	Slangklamma	5
0400	35	49 05 485		4-CYL, A	1	Vacuum connection	Vakuumanslutning	
0410	36	48 39 387		4-CYL, A, LHD	1	Vacuum pipe	Vakuumrör	
0420	36	49 08 265		4-CYL, A, RHD	1	Vacuum pipe	Vakuumrör	
0430	37	91 36 243		4-CYL, A, LHD, L=600 MM	1	.Vacuum hose	.Vakuumslang	5
0440	37	91 35 542		4-CYL, A, RHD, L=410 MM	1	.Vacuum hose	.Vakuumslang	5
0445	38	50 56 536		4-CYL, A, RHD	1	.Clip	.Clips	
0450	39			See page 3A-037, 1-G14		Pressure monitor	Tryckvakt	
0460	40	73 99 652		4-CYL, A	3	Clamp	Klammer	5

1. Not as separate spare part. Ej som separat reservdel.

MASTER INDEX

0	General	1-A02
2	Engine	1-C02
3A	Electrical systems, instruments	1-F02
4	Transmission	1-I02
5	Brakes	1-K02
6	Front assembly, Steering	1-L02
7	Suspension, Wheels	2-A02
8A	Body, external	2-B02
8B	Body, internal	2-F02
8C	Body, heating and ventilation	2-H02
8D	Tool, Labels	2-I02
9	Accessories	2-J02
10	Numerical register	3-A02

5 GROUP INDEX

Front wheel brake	1-K06
Rear wheel brake	1-K08
Footbrake system	1-K10
Parking brake system	1-K18
Complete sets	1-K20

Footbrake system

1-K14

Brake lines ABS

Fotbromssystem

Bromsledningar ABS

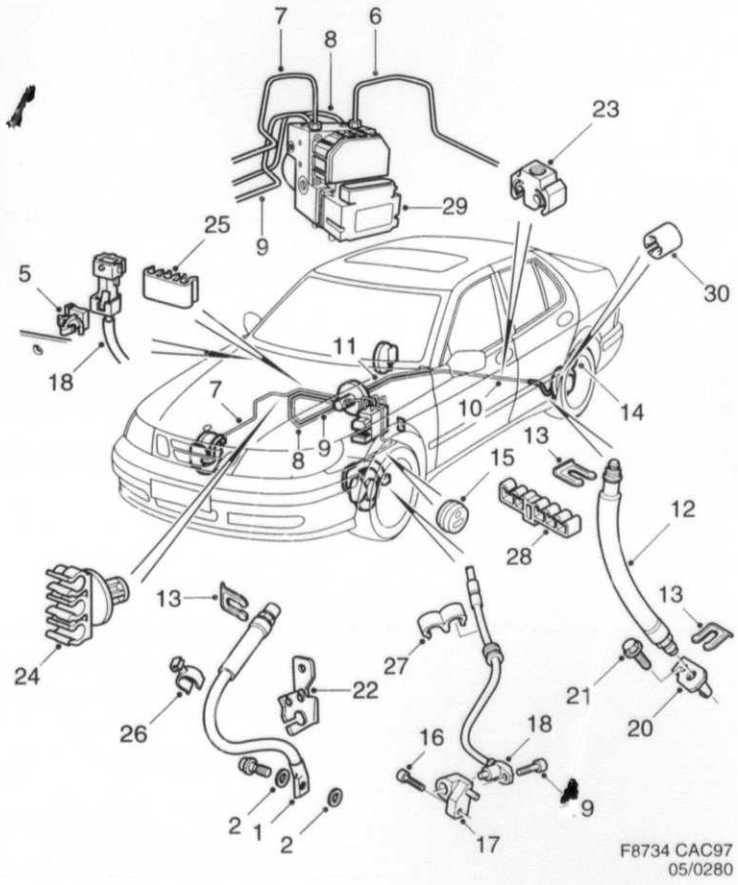

0280	Pos	Part No/Art nr	K S	Notes/Anmärkningar	Qty/ Antal	Description	Benämning	S L
0010	1	45 65 743			2	Brake hose	Bromsslang	4
0020	2	43 45 609			4	Sealing ring	Tätningsring	3
0030	3	43 45 591			2	Banjo screw	Banjoskruv	5
0050	5	41 76 095			2	Clip	Clips	5
0060	6	45 65 891		LH	1	Brake pipe	Bromsrör	4
0070	7	45 65 909		RH	1	Brake pipe	Bromsrör	4
0090	8	49 06 178		LH	1	Brake pipe	Bromsrör	4
0100	9	49 06 186		RH	1	Brake pipe	Bromsrör	4
0110	10	46 89 105		LH	1	Brake pipe	Bromsrör	4
0120		46 89 089		1)	1	.Brake pipe	.Bromsrör	4
0130		46 89 097		1)	1	.Brake pipe	.Bromsrör	4
0140	11	49 06 202		RH	1	Brake pipe	Bromsrör	4
0150	12	45 65 719			2	Brake hose	Bromsslang	4
0160	13	46 49 844			8	Hose retainer	Slanghållare	5
0170	14	49 07 630		LH	1	Brake pipe	Bromsrör	4
0180	14	49 07 648		RH	1	Brake pipe	Bromsrör	4
0190	15	43 99 358			2	Grommet	Genomföring	6
0200	16	79 78 133			2	Screw	Skruv	5
0210	17	45 67 079		LH	1	Bracket	Hållare	5
0220	17	45 67 087		RH	1	Bracket	Hållare	5
0230	18	49 09 966			2	Wheel speed sensor	Hastighetsgivare	
0240	19	79 78 133			2	Screw	Skruv	5
0250	20	48 35 781		LH	1	Bracket	Konsol	
0260	20	48 35 799		RH	1	Bracket	Konsol	
0270	21	79 78 117			2	Screw	Skruv	5
0280	22	45 68 119		LH	1	Bracket	Konsol	
0290	22	45 68 127		RH	1	Bracket	Konsol	
0300	23	48 35 005			3	Clamp	Klamma	5
0310	24	42 43 077			X	Tube clamp	Rörklamma	5
0320	25	46 45 578			1	Tube clamp	Rörklamma	5
0330	26	48 36 805			2	Clamp	Klammer	
0340	27	91 06 139			2	Tube clamp	Rörklamma	5
0350	28			See page 2-031, 1-D08		Tube clamp	Rörklamma	
0360	29			See page 5-009, 1-K10		Hydraulic unit	Hydraulaggregat	
0370	30	89 65 097			2	Tube clamp	Rörklamma	5

1. Not as separate spare part. Ej som separat reservdel.

MASTER INDEX

0	General	1-A02
2	Engine	1-C02
3A	Electrical systems, instruments	1-F02
4	Transmission	1-I02
5	Brakes	1-K02
6	Front assembly, Steering	1-L02
7	Suspension, Wheels	2-A02
8A	Body, external	2-B02
8B	Body, internal	2-F02
8C	Body, heating and ventilation	2-H02
8D	Tool, Labels	2-I02
9	Accessories	2-J02
10	Numerical register	3-A02

5 GROUP INDEX

Front wheel brake	1-K06
Rear wheel brake	1-K08
Footbrake system	1-K10
Parking brake system	1-K18
Complete sets	1-K20

Footbrake system

1-K16 Brake operation

Fotbromssystem

Bromsmanövrering

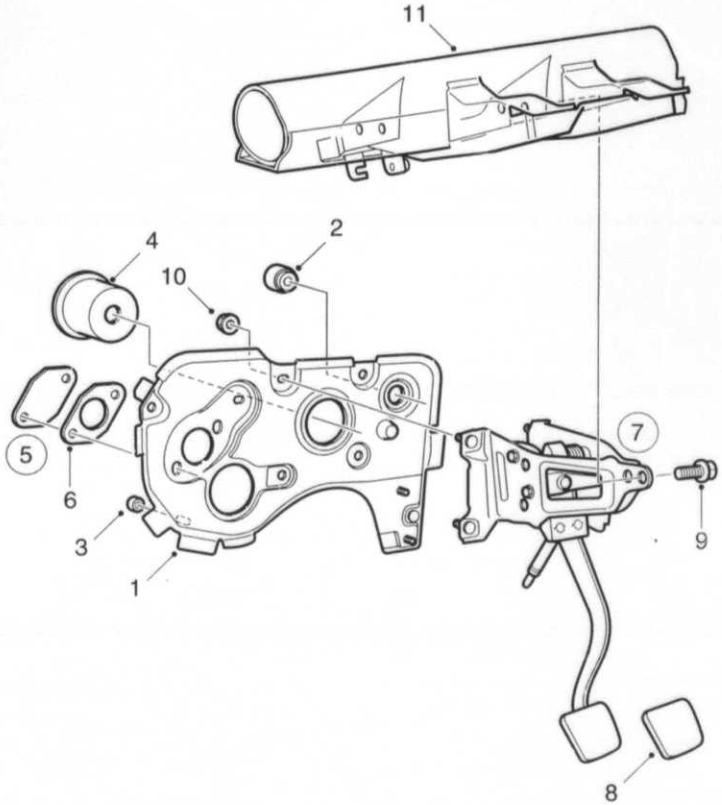

F8735 CAC97
05/0300

0300	Pos	Part No/Art nr	K S	Notes/Anmärkningar	Qty/ Antal	Description	Benämning	S L
0010	1	45 65 495		LHD	1	Cowl plate	Torpedplåt	
0020	1	45 65 503		RHD	1	Cowl plate	Torpedplåt	
0030	2	42 45 635			1	Seal	Tätning	5
0040	3	43 45 724			5	Seal	Tätning	5
0050	4	48 35 187		LHD	1	Seal	Tätning	
0060	4	48 35 195		RHD	1	Seal	Tätning	
0070	5	45 67 889		A	1	Cover	Täcklock	
0080	6	40 88 842			1	.Seal	.Tätning	
0090	7	46 89 360		M, LHD	1	Bracket	Konsol	
0100	7	46 89 352		A, LHD	1	Bracket	Konsol	
0110	7	46 87 612		M, RHD	1	Bracket	Konsol	
0120	7	46 87 620		A, RHD	1	Bracket	Konsol	
0130	8	46 88 586		M	1	.Pedal pad	.Pedalgummi	
0140	8	46 88 594		A	1	.Pedal pad	.Pedalgummi	
0150	9	79 78 190			2	Screw	Skruv	5
0160	10	43 45 419			4	Nut	Mutter	5
0170	11			See page 6-009, 1-L10		Steering wheel member	Rattbalk	

MASTER INDEX

0	General	1-A02
2	Engine	1-C02
3A	Electrical systems, instruments	1-F02
4	Transmission	1-I02
5	Brakes	1-K02
6	Front assembly, Steering	1-L02
7	Suspension, Wheels	2-A02
8A	Body, external	2-B02
8B	Body, internal	2-F02
8C	Body, heating and ventilation	2-H02
8D	Tool, Labels	2-I02
9	Accessories	2-J02
10	Numerical register	3-A02

5 GROUP INDEX

Front wheel brake	1-K06
Rear wheel brake	1-K08
Footbrake system	1-K10
Parking brake system	1-K18
Complete sets	1-K20

1-K18 *Parking brake system* *Parkeringsbromssystem*

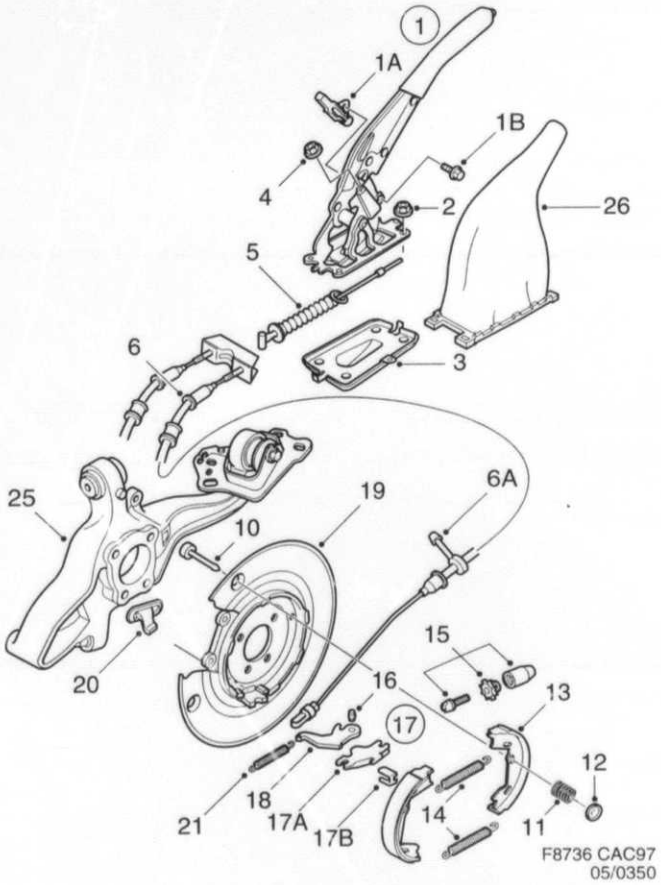

0350	Pos	Part No/Art nr	K S	Notes/Anmärkningar	Qty/ Antal	Description	Benämning	S L
0010	1	48 39 353			1	Handbrake lever	Handbromsspak	
0020	1A	42 47 698			1	.Contact	.Kontakt	5
0025	1B	43 46 276			1	.Screw	.Skruv	5
0030	2	79 77 929			4	Nut	Mutter	5
0040	3	45 67 343			1	Cover plate	Täckplåt	6
0050	4	43 47 217			1	Nut	Mutter	
0060	5	49 05 980			1	Handbrake cable	Handbromskabel	2
0070	6	49 08 356			1	Handbrake cable	Handbromskabel	
0075	6A			1)	1	.Rubber mounting	.Gummiupphängning	
0110	10	44 00 198			4	Locking pin	Spärrpinne	6
0120	11	44 00 206			4	Compression spring	Tryckfjäder	5
0130	12	44 00 214			4	Lock plate	Låsplatta	5
0140	13	48 36 441		See page 5-019, 1-K20	1	Brake shoe kit	Bromsbacksats	1
0150	14	44 00 263			4	Spring	Fjäder	2
0160	15	89 93 941			2	Adjusting kit	Justersats	
0170	16	44 00 248			2	Pin	Pinne	4
0180	17	46 46 832			2	Shackle	Schackel	4
0181	17A	*44 00 313*		1) NLS – USE 4646832	1	.Shackle	.Schackel	4
0182	17B	48 36 342		1)	1	.Clip	.Clips	
0190	18	48 36 367			2	Lever	Hävarm	3
J200	19	48 36 375		LH	1	Attaching plate	Fästplatta	6
0210	19	48 36 383		RH	1	Attaching plate	Fästplatta	6
0220	20	48 36 359			2	Dust seal	Dammtätning	6
0225	21	42 41 345			2	Return spring	Returfjäder	4
0230	25			See page 7-009, 2-A10		Cross stay	Tvärstag	
0240	26	48 16 120			1	Gaiter	Damask	
0250	26	48 16 138			1	Gaiter	Damask	
0260						leather	läder	

1. Not as separate spare part. Ej som separat reservdel.

MASTER INDEX

0	General	1-A02
2	Engine	1-C02
3A	Electrical systems, instruments	1-F02
4	Transmission	1-I02
5	Brakes	1-K02
6	Front assembly, Steering	1-L02
7	Suspension, Wheels	2-A02
8A	Body, external	2-B02
8B	Body, internal	2-F02
8C	Body, heating and ventilation	2-H02
8D	Tool, Labels	2-I02
9	Accessories	2-J02
10	Numerical register	3-A02

5 GROUP INDEX

Front wheel brake	1-K06
Rear wheel brake	1-K08
Footbrake system	1-K10
Parking brake system	1-K18
Complete sets	1-K20

Complete set
Brakes

Satser
Bromsar

1-K20

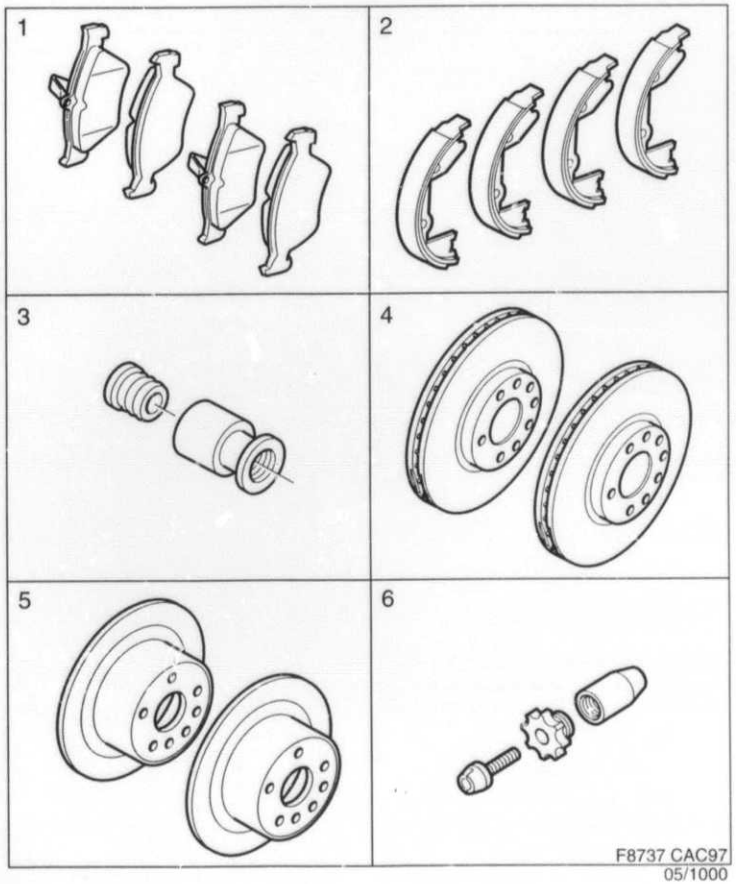

1000	Pos	Part No/Art nr	K S	Notes/Anmärkningar	Qty/ Antal	Description	Benämning	S L
0010	1	48 39 924			X	Brake pad kit	Bromsklotssats	1
0020						front brake	frambroms	
0030		47 78 072			1	.Brake pad	.Bromsklots	1
0040		47 78 221			1	.Brake pad	.Bromsklots	1
0050		48 39 882			1	.Brake pad	.Bromsklots	1
0060		48 39 890			1	.Brake pad	.Bromsklots	1
0070								
0080	2	48 36 441			X	Brake shoe kit	Bromsbacksats	1
0090		49 05 493		1)	4	Brake shoe	Bromsback	1
0100								
0110	3	44 67 064			X	Guide	Styrning	3
0120						front brake	frambroms	
0130		89 55 478			1	.Cover	.Lock	3
0140		89 69 107			1	.Sleeve	.Hylsa	6
0150								
0160	4	48 39 320			X	Brake disc	Bromsskiva	3
0170						front brake	frambroms	
0180		48 37 019			2	.Brake disc	.Bromsskiva	3
0190								
0700	5	48 39 338			X	Brake disc	Bromsskiva	2
0210						rear brake	bakbroms	
0220		48 37 027		1)	2	.Brake disc	.Bromsskiva	2
0230								
0240	6	89 93 941			X	Adjusting kit	Justersats	
0245						handbrake	handbroms	
0250		44 00 255			1	.Adjusting nut	.Justermutter	3
0260		44 00 271			1	.Screw	.Skruv	5
0270		44 00 289			1	.Sleeve	.Hylsa	6

1. Not as separate spare part. Ej som separat reservdel.

MASTER INDEX

0	General	1-A02
2	Engine	1-C02
3A	Electrical systems, instruments	1-F02
4	Transmission	1-I02
5	Brakes	1-K02
6	Front assembly, Steering	1-L02
7	Suspension, Wheels	2-A02
8A	Body, external	2-B02
8B	Body, internal	2-F02
8C	Body, heating and ventilation	2-H02
8D	Tool, Labels	2-I02
9	Accessories	2-J02
10	Numerical register	3-A02

5 GROUP INDEX

Front wheel brake	1-K06
Rear wheel brake	1-K08
Footbrake system	1-K10
Parking brake system	1-K18
Complete sets	1-K20

Complete set

1-K22 Brakes

Satser

Bromsar

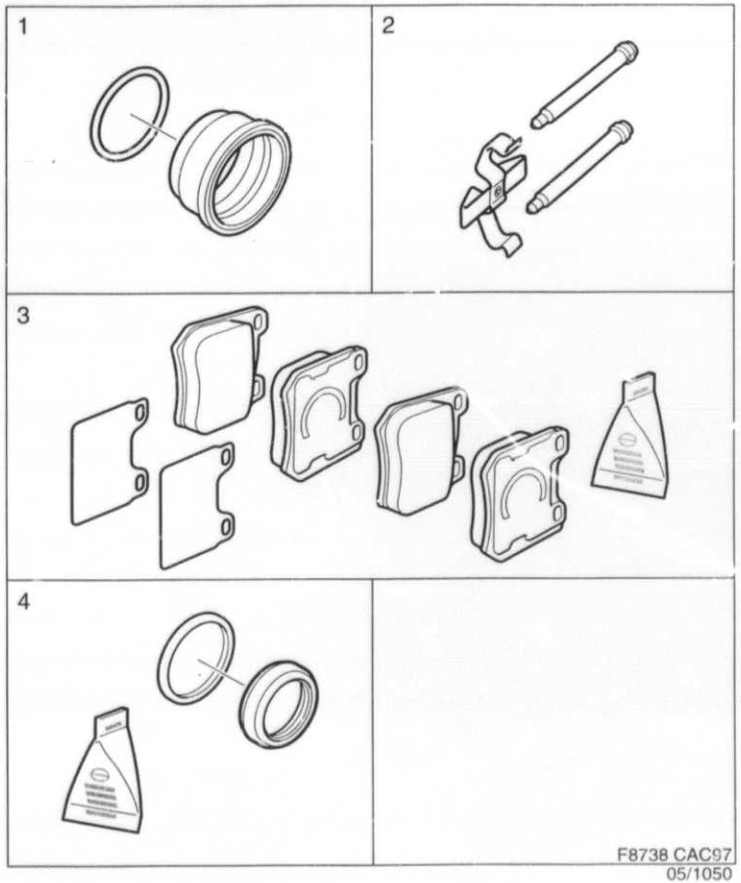

1050	Pos	Part No/Art nr	K S	Notes/Anmärkningar	Qty/ Antal	Description	Benämning	S L
0010	1	48 36 961			X	Sealing kit	Tätningssats	
0020						rear brake	bakbroms	
0030								
0040	2	49 08 497			X	Spring kit	Fjädersats	2
0050						rear brake	bakbroms	
0060		49 08 505		1)	2	.Pin	.Pinne	1
0070		49 08 513		1)	1	.Spring	.Fjäder	6
0080								
0090	3	48 36 987			X	Brake lining kit	Bromsbeläggsats	
0100						rear brake	bakbroms	
0110		50 56 015		1)	4	.Brake lining	.Bromsbelägg	
0120		48 36 979		1)	2	.Shim	.Shim	
0130		79 98 115		1)	1	.Grease	.Smörjfett	
0140								
0150	4	47 78 262			X	Gasket kit	Packningsats	2
0160						front brake	frambroms	
0170								

1. Not as separate spare part. Ej som separat reservdel.

MASTER INDEX

0	General	1-A02
2	Engine	1-C02
3A	Electrical systems, instruments	1-F02
4	Transmission	1-I02
5	Brakes	1-K02
6	Front assembly, Steering	1-L02
7	Suspension, Wheels	2-A02
8A	Body, external	2-B02
8B	Body, internal	2-F02
8C	Body, heating and ventilation	2-H02
8D	Tool, Labels	2-I02
9	Accessories	2-J02
10	Numerical register	3-A02

5 GROUP INDEX

Front wheel brake	1-K06
Rear wheel brake	1-K08
Footbrake system	1-K10
Parking brake system	1-K18
Complete sets	1-K20

1-L02

Front assembly, Steering
Framvagn, Styrinrättning
Tren delantero, Dirección

0041

0010
0020
0030
0040
0050
0060
0070
0080
0095
0100
0105
0110
0150
0160
0170
0180
0190

TABLE OF CONTENTS

Front wheel suspension		
Front wheel suspension	6 : 5	1-L06
Steering device		
Steering wheel, airbag module	6 : 7	1-L08
Steering wheel member, steering column	6 : 9	1-L10
Power steering gear	6 : 11	1-L12
Hydraulic pump, hoses	6 : 13	1-L14
Complete sets		
Front wheel suspension, steering device	6 : 15	1-L16

MASTER INDEX

0	General	1-A02
2	Engine	1-C02
3A	Electrical systems, instruments	1-F02
4	Transmission	1-I02
5	Brakes	1-K02
6	Front assembly, Steering	1-L02
7	Suspension, Wheels	2-A02
8A	Body, external	2-B02
8B	Body, internal	2-F02
8C	Body, heating and ventilation	2-H02
8D	Tool, Labels	2-I02
9	Accessories	2-J02
10	Numerical register	3-A02

6 GROUP INDEX

Front wheel suspension	1-L06
Steering device	1-L08
Complete sets	1-L16

0042
0170
0180
0190
0200
0210
0220
0230
0240
0255
0260
0265
0270
0310
0320
0330
0340
0350
0680
0690
0700
0710
0720
0735
0740
0745
0750
0790
0800
0810
0820
0830

INNEHÅLLSFÖRTECKNING

Framvagn		
Framvagn	6 : 5	1-L06
Styrinrättning		
Ratt, airbagmodul	6 : 7	1-L08
Rattbelk, rattställ	6 : 9	1-L10
Servostyrväxel	6 : 11	1-L12
Hydraulpump, slangar	6 : 13	1-L14
Satser		
Framvagn, styrinrättning	6 : 15	1-L16

SUMARIO

Tren delantero		
Tren delantero	6 : 5	1-L06
Direccion		
Volante, cojin antichoque	6 : 7	1-L08
Elemento del volante, tubo de la direccion	6 : 9	1-L10
Servomecanismo de direccion	6 : 11	1-L12
Bomba hidraulica, mangueras	6 : 13	1-L14
Juegos completos		
Mecanismos delanteros, direccin, cambio en el volante	6 : 15	1-L16

MASTER INDEX

0	General	1-A02
2	Engine	1-C02
3A	Electrical systems, instruments	1-F02
4	Transmission	1-I02
5	Brakes	1-K02
6	Front assembly, Steering	1-L02
7	Suspension, Wheels	2-A02
8A	Body, external	2-B02
8B	Body, internal	2-F02
8C	Body, heating and ventilation	2-H02
8D	Tool, Labels	2-I02
9	Accessories	2-J02
10	Numerical register	3-A02

6 GROUP INDEX

Front wheel suspension	1-L06
Steering device	1-L08
Complete sets	1-L16

1-L06 *Front wheel suspension* *Framvagn*

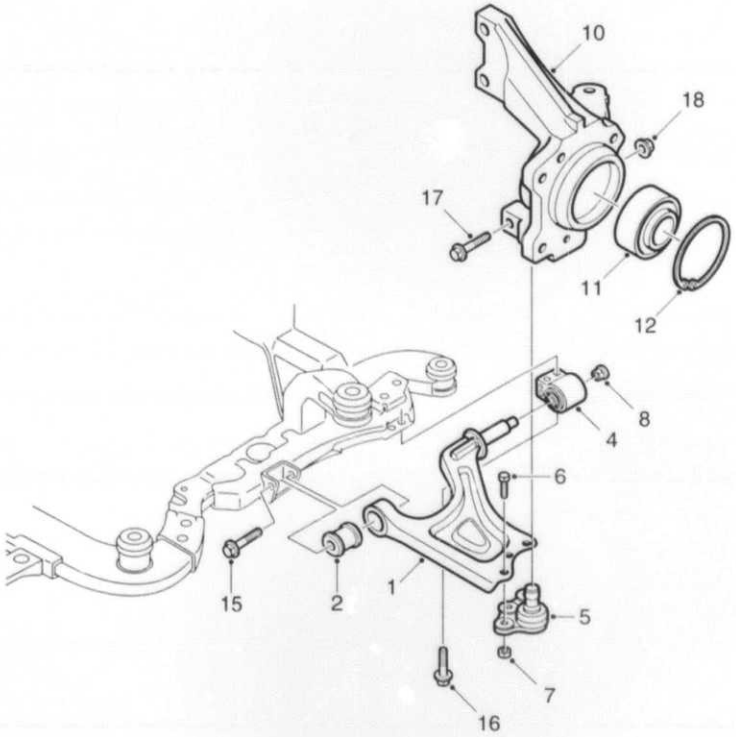

F8739 CAC97
06/0100

0100	Pos	Part No/Art nr	K S	Notes/Anmärkningar	Qty/ Antal	Description	Benämning	S L
0010	1	48 35 708		LH	1	Arm	Arm	
0020	1	48 35 716		RH	1	Arm	Arm	
0030	2	45 66 899			2	Bushing	Bussning	
0050	4	49 08 109			2	Bushing	Bussning	
0060	5	48 35 740			2	End piece	Ändstycke	
0070	6	43 48 330			6	Screw	Skruv	5
0080	7	43 48 355			6	Nut	Mutter	5
0090	8	79 79 552			2	Nut	Mutter	5
0100	10	45 69 638		LH	1	Steering knuckle housing	Styrspindelhus	5
0115	10	45 69 646		RH	1	Steering knuckle housing	Styrspindelhus	5
0120	11	46 89 923			2	Angular contact ball brg.	Vinkelkontaktkullager	5
0125	12	43 45 450			2	Retaining ring	Spårring	5
0130	15	79 84 933			2	Screw	Skruv	5
0140	16	79 85 856			4	Screw	Skruv	5
0150	17	49 40 219			2	Screw	Skruv	5
0160	18	43 48 009			2	Nut	Mutter	

MAS ".R INDEX

0	General	1-A02
2	Engine	1-C02
3A	Electrical systems, instruments	1-F02
4	Transmission	1-I02
5	Brakes	1-K02
6	Front assembly, Steering	1-L02
7	Suspension, Wheels	2-A02
8A	Body, external	2-B02
8B	Body, internal	2-F02
8C	Body, heating and ventilation	2-H02
8D	Tool, Labels	2-I02
9	Accessories	2-J02
10	Numerical register	3-A02

6 GROUP INDEX

Front wheel suspension	1-L06
Steering device	1-L08
Complete sets	1-L16

1-L08 Steering wheel / Ratt
Airbag module / Airbagmodul

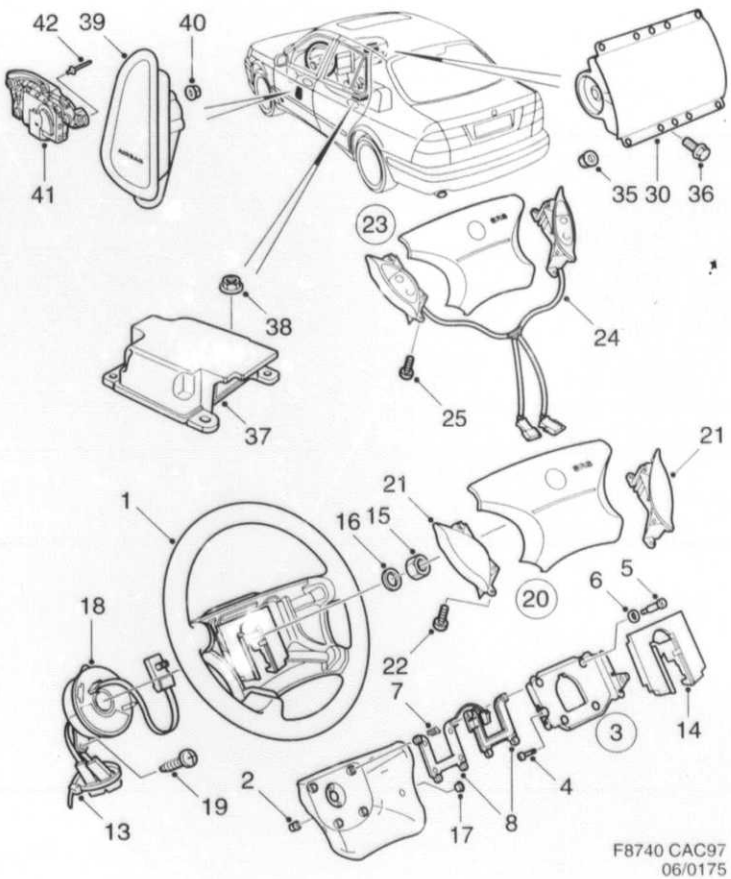

0175	Pos	Part No/Art nr	K. S	Notes/Anmärkningar	Qty/ Antal	Description	Benämning	S L
0010	1	45 32 248			1	Steering wheel	Ratt	
0020	1	45 32 255			1	Steering wheel	Ratt	
0030						leather	läder	
0040	2	45 06 150			1	.Bushing	.Bussning	
0050	3	45 06 168			1	.Signal device	.Signalanordning	
0060	4	50 12 182			1	..Screw	..Skruv	
0070	5	45 06 200			4	.Screw	.Skruv	
0080	6	45 06 218			4	.Rubber damper	.Gummidämpare	
0090	7	45 06 226			4	.Spring	.Fjäder	
0100	8	45 06 242			1	.Cable network	.Kabelnät	
0105	13	79 71 880			1	Tensioning band	Spännband	4
0110	14	48 47 562		4-CYL	1	Vibration damper	Vibrationsdämpare	
0120	15	89 54 315			1	Nut	Mutter	5
0130	16	80 30 058			1	Washer	Bricka	5
0140	17	45 06 143			2	Cover	Täcklock	
0150	18	50 11 705			1	Contact unit	Kontaktenhet	
0160	19	79 70 304			2	Screw	Skruv	5
0170	20	50 11 762			1	Airbag module	Airbagmodul	5
0180	21	48 01 262		LH	1	.Cover	.Täcklock	
0190	21	48 01 270		RH	1	.Cover	.Täcklock	
0200	22	79 82 333			4	.Screw	.Skruv	5
0210	23	50 11 754			1	Airbag module	Airbagmodul	5
0220	24	46 16 025			1	.Switch	.Strömställare	
0230	25	79 82 333			4	.Screw	.Skruv	5
0240	30	50 12 265		LHD	1	Airbag module	Airbagmodul	
0250	30	50 12 273		RHD	1	Airbag module	Airbagmodul	
0260	35	79 74 298			6	Nut	Mutter	5
0270	36	79 72 607			1	Screw	Skruv	5
0280	37	46 53 382			1	Electronic unit	Elektronikenhet	
0290	38	79 77 929			1	Nut	Mutter	5
0300	39	45 34 244		LH	1	Air-bag	Airbag	
0310	39	46 53 853		RH	1	Air-bag	Airbag	
0320	40	79 75 576			6	Nut	Mutter	5
0330	41	46 53 390		LH	1	Sensor	Sensor	
0340	41	46 53 374		RH	1	Sensor	Sensor	
0350	42	79 72 516			4	Rivet	Nit	5
0360		50 10 244			X	Kit	Sats	
0370				See page 6-015, 1-L16		disconnected passenger	urkoppling passagerar-	
0380						airbag	airbag	

MASTER INDEX

0	General	1-A02
2	Engine	1-C02
3A	Electrical systems, instruments	1-F02
4	Transmission	1-I02
5	Brakes	1-K02
6	Front assembly, Steering	1-L02
7	Suspension, Wheels	2-A02
8A	Body, external	2-B02
8B	Body, internal	2-F02
8C	Body, heating and ventilation	2-H02
8D	Tool, Labels	2-I02
9	Accessories	2-J02
10	Numerical register	3-A02

6 GROUP INDEX

Front wheel suspension	1-L06
Steering device	1-L08
Complete sets	1-L16

1-L10 Steering wheel member / Steering column / Rattbalk / Rattställ

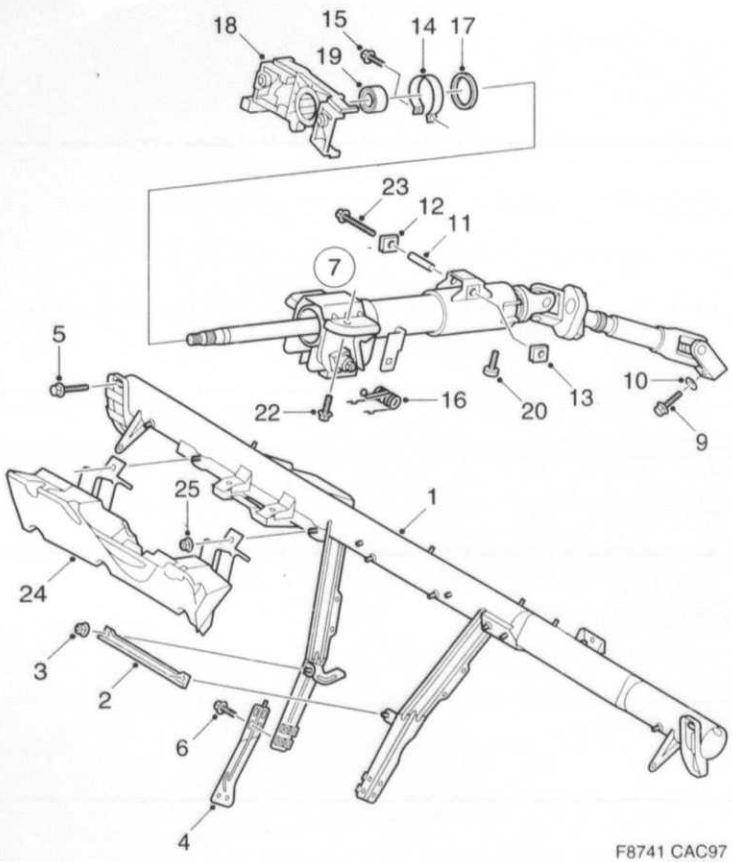

F8741 CAC97
06/0200

0200	Pos	Part No/Art nr	K S	Notes/Anmärkningar	Qty/ Antal	Description	Benämning	S L
0010	1	47 17 567		LHD	1	Steering wheel member	Rattbalk	
0020	1	47 17 575		RHD	1	Steering wheel member	Rattbalk	
0030	2	47 18 854			1	Cross stay	Tvärstag	
0040	3	79 77 929			2	Nut	Mutter	5
0050	4	50 12 745		LH	1	Support	Stödben	
0060	4	50 12 752		RH	1	Support	Stödben	
0070	5	79 75 212			4	Screw	Skruv	5
0075	6	79 72 623			12	Screw	Skruv	5
0080	7	48 48 438		LHD	1	Steering column	Rattställ	
0090	7	48 48 446		RHD	1	Steering column	Rattställ	
0120	9	79 85 898			1	.Hexagon screw	.Sexkantsskruv	5
0130	10	80 73 249			1	.Washer	.Bricka	5
0140	11	48 46 721			1	.Sleeve	.Hylsa	
0150	12	48 46 804			1	.Bushing	.Bussning	
0160	13	48 46 713			1	.Bushing	.Bussning	
0170	14	48 46 754			1	.Clamp	.Klamma	
0180	15	80 97 883			1	.Screw	.Skruv	5
0190	16	50 10 467			1	.Spring	.Fjäder	
0200	17	48 46 788			1	.Lock ring	.Låsring	
0210	18	48 46 747			1	.Bearing housing	.Lagerhus	
0212	19	48 47 349			1	.Bushing	.Bussning	
0214	20	48 47 372			1	.Hexagon screw	.Sexkantsskruv	
0220	22	79 78 190			2	Screw	Skruv	5
0230	23	79 82 119			1	Screw	Skruv	5
0240	24	46 84 155		LHD	1	Knee protection	Knäskydd	
0250	24	46 84 197		RHD	1	Knee protection	Knäskydd	
0260	25	79 77 952			4	Hexagon nut	Sexkantsmutter	5

MASTER INDEX

0	General	1-A02
2	Engine	1-C02
3A	Electrical systems, instruments	1-F02
4	Transmission	1-I02
5	Brakes	1-K02
6	Front assembly, Steering	1-L02
7	Suspension, Wheels	2-A02
8A	Body, external	2-B02
8B	Body, internal	2-F02
8C	Body, heating and ventilation	2-H02
8D	Tool, Labels	2-I02
9	Accessories	2-J02
10	Numerical register	3-A02

6 GROUP INDEX

Front wheel suspension	1-L06
Steering device	1-L08
Complete sets	1-L16

Steering device

1-L12 *Power steering gear*

Styrinrättning

Servostyrväxel

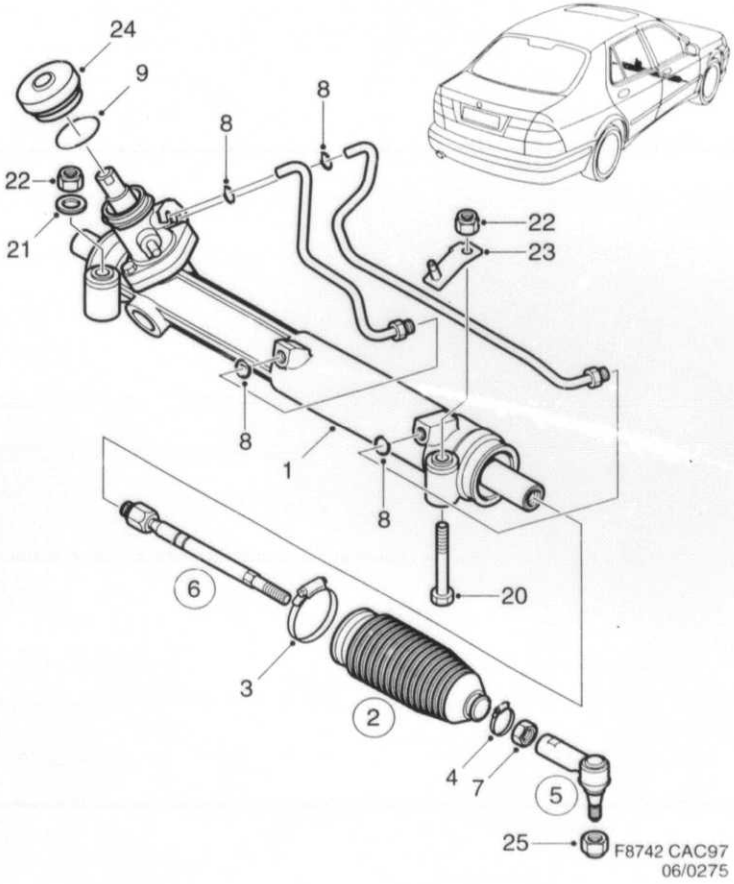

0275	Pos	Part No/Art nr	K S	Notes/Anmärkningar	Qty/ Antal	Description	Benämning	S L
0010	1	49 07 861		LHD	1	Power steering gear	Servostyrväxel	
0030	1	49 07 879		RHD	1	Power steering gear	Servostyrväxel	
0050	2	49 05 865		See page 6-015, 1-L16	1	.Bellows kit	.Bälgsats	3
0060	3	49 05 683			1	..Clamp	..Klammer	5
0070	4	49 05 675			1	..Clamp	..Klammer	5
0080	5	48 36 540		See page 6-015, 1-L16	1	.Kit	.Sats	2
0090	6	48 36 557		See page 6-015, 1-L16	1	.Steering rod	.Styrstag	4
0100	7	89 72 309			1	..Nut	..Mutter	5
0110	8	48 36 565		See page 6-015, 1-L16	1	.O-ring	.O-ring	3
0115	9	49 09 032			1	.O-ring	.O-ring	
0120	20	45 68 390			2	Screw	Skruv	5
0130	21	89 34 259		LHD	1	Washer	Bricka	5
0140	21	89 34 259		RHD	2	Washer	Bricka	5
0150	22	79 79 552			2	Nut	Mutter	5
0160	23	46 89 543		LHD	1	Bracket	Konsol	3
0170	24	49 09 800			1	Seal	Tätning	
0180	25	43 45 567			2	Lock nut	Låsmutter	

MASTER INDEX

0	General	1-A02
2	Engine	1-C02
3A	Electrical systems, instruments	1-F02
4	Transmission	1-I02
5	Brakes	1-K02
6	Front assembly, Steering	1-L02
7	Suspension, Wheels	2-A02
8A	Body, external	2-B02
8B	Body, internal	2-F02
8C	Body, heating and ventilation	2-H02
8D	Tool, Labels	2-I02
9	Accessories	2-J02
10	Numerical register	3-A02

6 GROUP INDEX

Front wheel suspension	1-L06
Steering device	1-L08
Complete sets	1-L16

1-L14

Steering device
Hydraulic pump hoses

Styrinrättning
Hydraulpump slangar

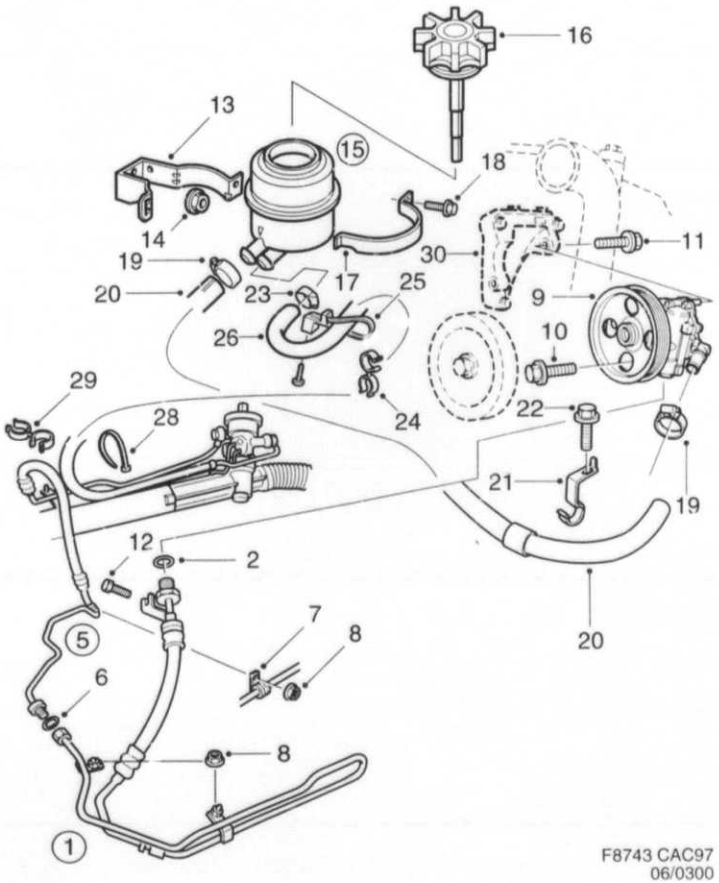

F8743 CAC97
06/0300

0300	Pos	Part No/Art nr	K S	Notes/Anmärkningar	Qty/ Antal	Description	Benämning	S L
0010	1	49 08 588			1	Pressure hose	Tryckslang	
0020	2	79 77 580			1	.O-ring	.O-ring	2
0030	5	48 39 650		LHD	1	Delivery pipe	Tryckrör	
0040	5	49 08 489		RHD	1	Delivery pipe	Tryckrör	
0050	6	79 77 580			1	.O-ring	.O-ring	2
0060	7	49 09 180			X	Clamp	Klammer	
0070	8	79 77 929			X	Nut	Mutter	5
0080	9	48 38 447			1	Hydraulic pump	Hydraulpump	
0090	10	79 78 224			1	Screw	Skruv	5
0100	11	79 82 960			1	Hexagon screw	Sexkantsskruv	5
0110	12	79 78 190			1	Screw	Skruv	5
0120	13	45 68 358			1	Bracket	Fäste	
0130	14	79 77 929			2	Nut	Mutter	5
0140	15	44 82 600			1	Reservoir	Behållare	
0150	16	44 02 798			1	.Cover	.Lock	
0160	17	42 42 897			1	Brace	Bygel	
0170	18	79 78 117			1	Screw	Skruv	5
0180	19	79 70 072			2	Hose clamp	Slangklamma	5
0190	20	48 35 757			1	Suction hose	Sugslang	
0200	21	48 35 765			1	Clip	Clips	
0210	22	79 82 481			1	Screw	Skruv	5
0220	23	79 70 056			1	Hose clamp	Slangklamma	5
0230	24	40 28 569		AC/ACC	1	Clamp	Klammer	5
0240	25	95 25 221			1	Tensioning band	Spännband	5
0250	26	48 39 635		LHD	1	Return pipe	Returrör	
0260	26	48 39 643		RHD	1	Return pipe	Returrör	
0270	28	79 71 880		LHD	2	Tensioning band	Spännband	4
0280	29	40 28 569		LHD	1	Clamp	Klammer	5
0290	30			See page 2-007, 1-C08		Bracket	Konsol	

MASTER INDEX

0	General	1-A02
2	Engine	1-C02
3A	Electrical systems, instruments	1-F02
4	Transmission	1-I02
5	Brakes	1-K02
6	Front assembly, Steering	1-L02
7	Suspension, Wheels	2-A02
8A	Body, external	2-B02
8B	Body, internal	2-F02
8C	Body, heating and ventilation	2-H02
8D	Tool, Labels	2-I02
9	Accessories	2-J02
10	Numerical register	3-A02

6 GROUP INDEX

Front wheel suspension	1-L06
Steering device	1-L08
Complete sets	1-L16

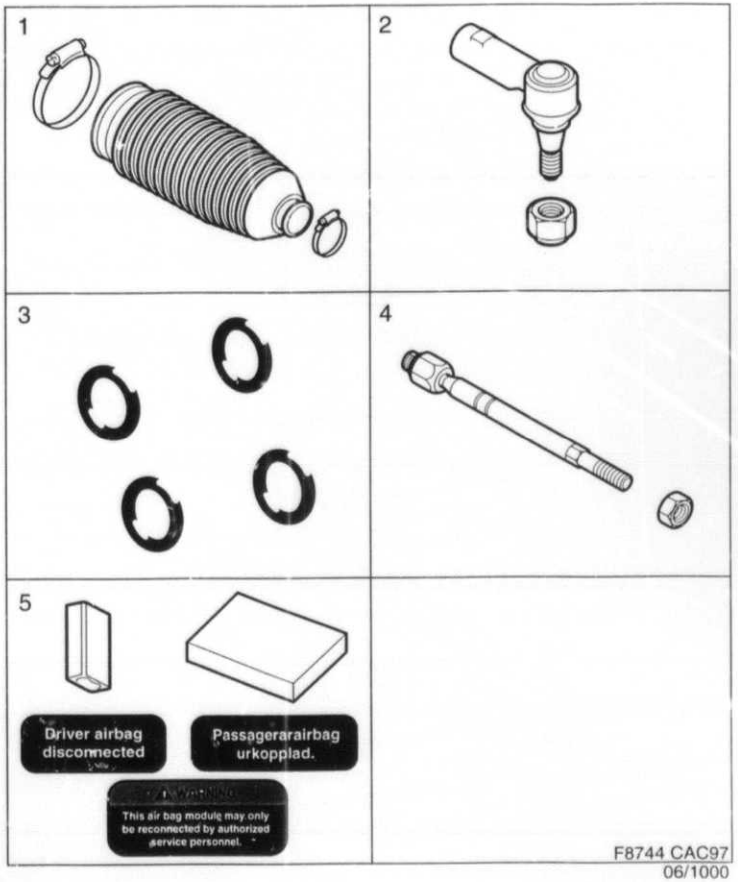

1-L16

Complete sets
Fore carriage
Steering device

Satser
Framvagn
Styrinrättning

1000	Pos	Part No/Art nr	K S	Notes/Anmärkningar	Qty/ Antal	Description	Benämning	S L
0010	1	49 05 865			X	Bellows kit	Bälgsats	3
0020		49 05 667		1)	1	.Bellows	.Bälg	6
0030		49 05 675			1	.Clamp	.Klammer	5
0040		49 05 683			1	.Clamp	.Klammer	5
0050								
0060	2	48 36 540			X	Kit	Sats	2
0070		49 05 949		1)	1	.Drag link end	.Styrstagsända	2
0080		43 45 567			1	.Lock nut	.Låsmutter	
0090								
0100	3	48 36 565			X	O-ring	O-ring	3
0110		48 36 466		1)	4	.O-ring	.O-ring	3
0120								
0130	4	48 36 557			X	Steering rod	Styrstag	4
0140		49 05 659		1)	1	.Steering rod	.Styrstag	3
0150		89 72 309			1	.Nut	.Mutter	5
0160								
0170	5	50 10 244			X	Kit	Sats	
0180						disconnected passenger	urkoppling passagerar-	
0190						airbag	airbag	
0200		50 10 053			1	.Label	.Etikett	
0210		50 10 079			1	.Label	.Etikett	
0220		50 10 087			1	.Label	.Etikett	
0230		50 10 228		1)	1	.Resistor	.Motstånd	6
0240		79 71 880			1	.Tensioning band	.Spännband	4

1. Not as separate spare part. Ej som separat reservdel.

MASTER INDEX

0	General	1-A02
2	Engine	1-C02
3A	Electrical systems, instruments	1-F02
4	Transmission	1-I02
5	Brakes	1-K02
6	Front assembly, Steering	1-L02
7	Suspension, Wheels	2-A02
8A	Body, external	2-B02
8B	Body, internal	2-F02
8C	Body, heating and ventilation	2-H02
8D	Tool, Labels	2-I02
9	Accessories	2-J02
10	Numerical register	3-A02

6 GROUP INDEX

Front wheel suspension	1-L06
Steering device	1-L08
Complete sets	1-L16

7

Suspension, Wheels
Fjädringssystem, Hjul
Suspensión, Ruedas

2-A02

0041
0020
0040
0060
0080
0100
0125
0130
0160

TABLE OF CONTENTS

Front suspension	7 : 5	2-A06
Wheel	7 : 7	2-A08
Rear axle	7 : 9	2-A10

MASTER INDEX

0	General	1-A02
2	Engine	1-C02
3A	Electrical systems, instruments	1-F02
4	Transmission	1-I02
5	Brakes	1-K02
6	Front assembly, Steering	1-L02
7	Suspension, Wheels	2-A02
8A	Body, external	2-B02
8B	Body, internal	2-F02
8C	Body, heating and ventilation	2-H02
8D	Tool, Labels	2-I02
9	Accessories	2-J02
10	Numerical register	3-A02

7 GROUP INDEX

Front suspension	2-A06
Wheel	2-A08
Rear axle	2-A10

042
020
040
060
240
260
270
290
320
340
360
380
700
720
740
761
770
800

INNEHÅLLSFÖRTECKNING

Främre fjädring	7 : 5	2-A06
Hjul	7 : 7	2-A08
Bakaxel	7 : 9	2-A10

SUMARIO

Suspension Del	7 : 5	2-A06
Ruedas	7 : 7	2-A08
Eje Tras	7 : 9	2-A10

MASTER INDEX

0	General	1-A02
2	Engine	1-C02
3A	Electrical systems, instruments	1-F02
4	Transmission	1-I02
5	Brakes	1-K02
6	Front assembly, Steering	1-L02
7	Suspension, Wheels	2-A02
8A	Body, external	2-B02
8B	Body, internal	2-F02
8C	Body, heating and ventilation	2-H02
8D	Tool, Labels	2-I02
9	Accessories	2-J02
10	Numerical register	3-A02

7 GROUP INDEX

Front suspension	2-A06
Wheel	2-A08
Rear axle	2-A10

2-A06 *Front suspension* *Främre fjädring*

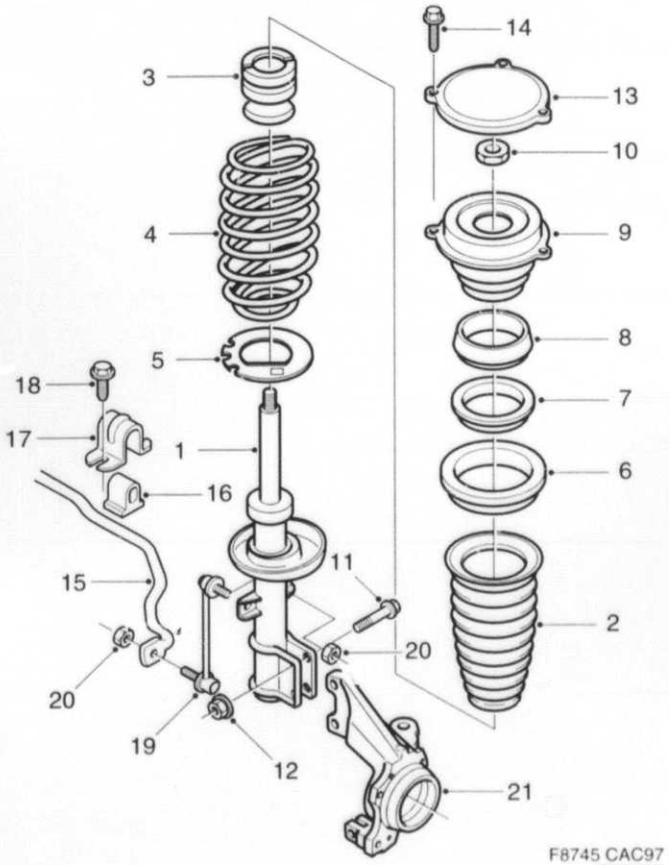

F8745 CAC97
07/0110

0110	Pos	Part No/Art nr	K §	Notes/Anmärkningar	Qty/ Antal	Description	Benämning	S L
0010	1	49 05 014		CODE=H	2	Spring strut	Fjäderben	
0020						red	röd	
0030	1	45 65 214		CODE=J	2	Spring strut	Fjäderben	
0040						yellow	gul	
0050	2	45 65 180			2	Bellows	Bälg	
0060	3	48 37 415			2	Bump stop	Genomslagsstopp	
0070	4	45 66 642		CODE=AN	2	Compression spring	Tryckfjäder	
0080						red/red	röd/röd	
0090	4	45 66 659		CODE=AP	2	Compression spring	Tryckfjäder	
0100						yellow/red	gul/röd	
0110	4	45 66 667		CODE=AR	2	Compression spring	Tryckfjäder	
0120						red/white	röd/vit	
0130	4	45 66 675		CODE=AS	2	Compression spring	Tryckfjäder	
0140						white/white	vit/vit	
0190	5	46 89 378			2	Spacer	Mellanlägg	
0200	6	46 89 519			2	Spring support	Fjäderstöd	
0210	7	42 46 377			2	Thrust bearing	Axiallager	6
0220	8	45 65 172			2	Seal	Tätning	
0730	9	45 65 149			2	Support bearing	Stödlager	
0240	10	79 79 537			2	Lock nut	Låsmutter	3
0250	11	49 40 219			4	Screw	Skruv	5
0260	12	43 48 009			4	Nut	Mutter	
0270	13	45 65 230			2	Cover	Täcklock	
0280	14	79 86 581			6	Flange screw	Flänsskruv	
0290	15	50 55 108		CODE=F	1	Anti-roll bar	Krängningshämmare	
0300	16	46 86 820			2	Bearing	Lager	
0310	17	46 87 109			2	Cap	Överfall	
0320	18	79 76 897			4	Screw	Skruv	5
0330	19	46 86 606			2	Pendulum	Pendel	
0340	20	43 45 567			4	Lock nut	Låsmutter	
0350	21			See page 6-005, 1-L06		Steering knuckle housing	Styrspindelhus	

MASTER INDEX

0	General	1-A02
2	Engine	1-C02
3A	Electrical systems, instruments	1-F02
4	Transmission	1-I02
5	Brakes	1-K02
6	Front assembly, Steering	1-L02
7	Suspension, Wheels	2-A02
8A	Body, external	2-B02
8B	Body, internal	2-F02
8C	Body, heating and ventilation	2-H02
8D	Tool, Labels	2-I02
9	Accessories	2-J02
10	Numerical register	3-A02

7 GROUP INDEX

Front suspension	2-A06
Wheel	2-A08
Rear axle	2-A10

2-A08 *Wheel* *Hjul*

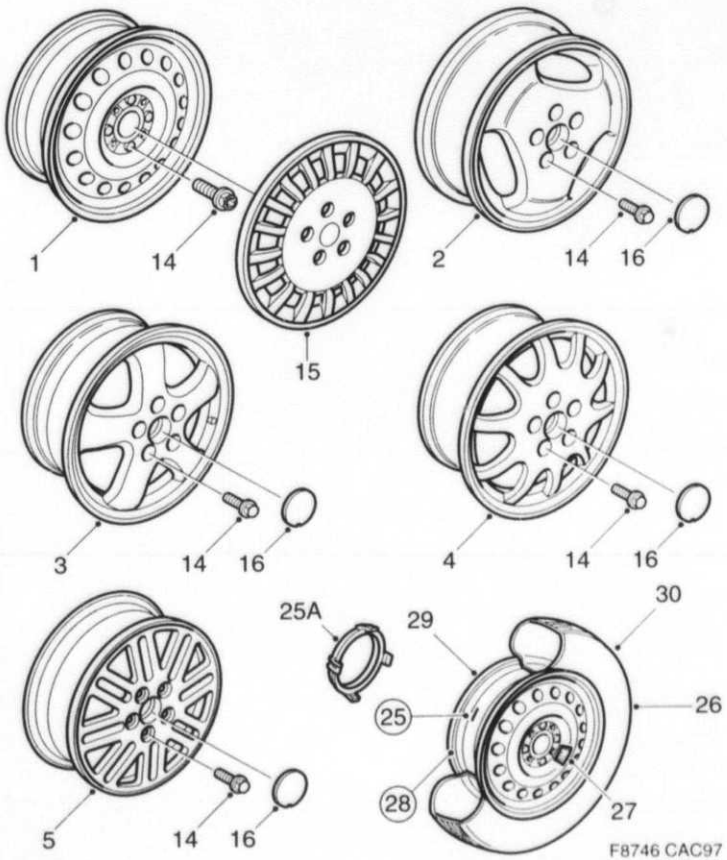

0125	Pos	Part No/Art nr	K S	Notes/Anmärkningar	Qty/ Antal	Description	Benämning	S L
0010	1	46 88 156		6 X 15"	4	Rim	Fälg	4
0020						steel-wheel,black	stålhjul,svart	
0030	2	45 66 055		6,5 X 16", 40/400108361	4	Rim	Fälg	
0040	3	46 87 257		6,5 X 16", 40/400106563	4	Rim	Fälg	
0050	4	49 09 164		6,5 X 16", 40/400109583	4	Rim	Fälg	
0060	5	48 39 239		6,5 X 16", 40/400109336	4	Rim	Fälg	
0190	14	49 08 067			20	Wheel screw	Hjulskruv	2
0200	15	45 66 030		40/400106548	4	Wheel cap	Hjulkapsel	
0210	16	45 66 311		40/400106522	4	Hub cap	Navkapsel	
0300	25	49 07 556			1	Wheel	Hjul	
0305	25A			See page 8B-041, 2-G18	1	.Spacer ring	.Distansring	
0310	26	48 39 544			1	.Tyre	.Däck	
0320	27			See page 8D-011, 2-I12	1	.Label	.Etikett	
0330	28	48 38 850			1	Wheel	Hjul	
0340						big spare wheel	stort reservhjul	
0350	29	46 88 156			1	.Rim	.Fälg	4
0360	30	44 26 946		195/65 R15	1	.Tyre	.Däck	

MASTER INDEX

0	General	1-A02
2	Engine	1-C02
3A	Electrical systems, instruments	1-F02
4	Transmission	1-I02
5	Brakes	1-K02
6	Front assembly, Steering	1-L02
7	Suspension, Wheels	2-A02
8A	Body, external	2-B02
8B	Body, internal	2-F02
8C	Body, heating and ventilation	2-H02
8D	Tool, Labels	2-I02
9	Accessories	2-J02
10	Numerical register	3-A02

7 GROUP INDEX

Front suspension	2-A06
Wheel	2-A08
Rear axle	2-A10

2-A10 *Rear axle* *Bakaxel*

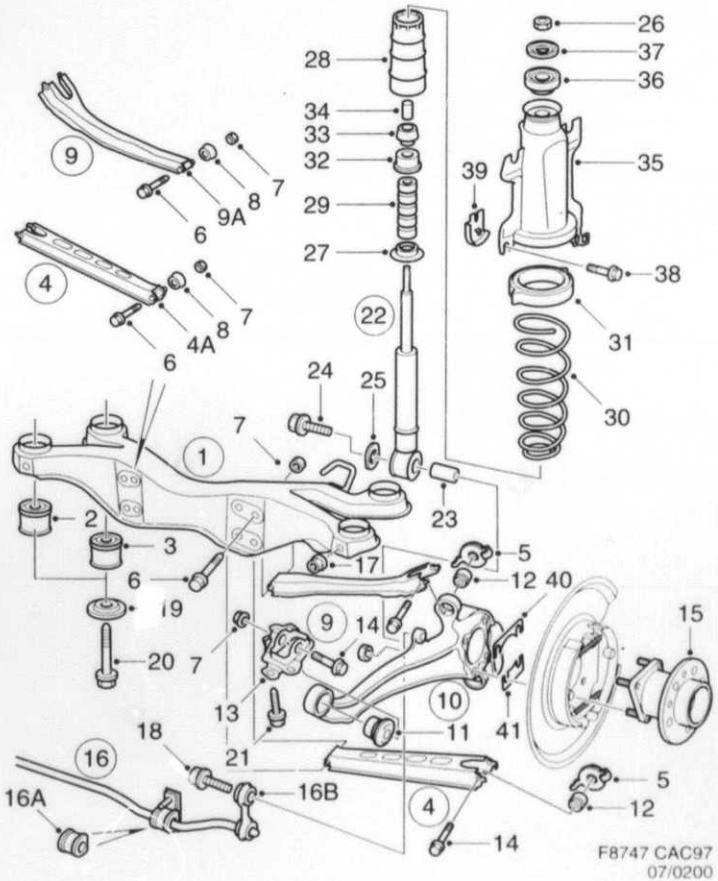

0200	Pos	Part No/Art nr	K S	Notes/Anmärkningar	Qty/ Antal	Description	Benämning	S L
0010	1	49 06 384			1	Rear axle	Bakaxel	
0020	2	45 66 394			2	.Bushing	.Bussning	
0030	3	46 87 125			2	.Bushing	.Bussning	
0040	4	45 65 263			2	Cross stay	Tvärstag	
0045	4A	45 66 378			1	.Bushing	.Bussning	
0050	5	43 47 894			4	Nut	Mutter	
0060	6	43 47 506			4	Screw	Skruv	
0070	7	43 48 009			6	Nut	Mutter	
0080	8	49 06 319			2	Washer	Bricka	
0090	9	45 65 255			2	Cross stay	Tvärstag	
0095	9A	45 66 378			1	.Bushing	.Bussning	
0100	10	48 36 201		LH	1	Cross stay	Tvärstag	
0110	10	48 36 219		RH	1	Cross stay	Tvärstag	
0140	11	45 66 600			1	.Bushing	.Bussning	
0150	12	45 67 244			2	.Bushing	.Bussning	
0152	13	45 69 604		LH	1	Bracket	Konsol	
0154	13	45 69 596		RH	1	Bracket	Konsol	
0160	14	43 47 514			6	Screw	Skruv	
0170	15			See page 5-007, 1-K08		Wheel hub	Hjulnav	
0175	16	49 06 038		CODE=E	1	Anti-roll bar	Krängningshämmare	
0180	16	49 06 046		CODE=F	1	Anti-roll bar	Krängningshämmare	
0185	16A	49 06 525		CODE=E	2	.Bearing	.Lager	
0186	16A	49 06 749		CODE=F	2	.Bearing	.Lager	
0187	16B	45 65 859		CODE=E	2	.Link	.Länk	
0188	16B	49 06 111		CODE=F	2	.Link	.Länk	
0190	17	43 45 153			2	Flange lock nut	Flänslåsmutter	3
0200	18	43 47 522			2	Screw	Skruv	
0210	19	43 47 571			4	Washer	Bricka	
0215	20	49 40 177			4	Screw	Skruv	
0220	21	43 47 852			6	Screw	Skruv	
0230	22	49 05 022		CODE=H	2	Shock absorber	Stötdämpare	
0240						red	rod	
0260	22	49 05 964		CODE=J	2	Shock absorber	Stötdämpare	
0270						yellow	gul	
0273	22	46 86 101		CODE=K	2	Shock absorber	Stötdämpare	
0274						orange	orange	
0280	23	45 66 832			1	.Bushing	.Bussning	1
0290	24	43 48 116			2	Screw	Skruv	
0300	25	46 87 687			2	Washer	Bricka	
0310	26	*81 51 474*		NLS - USE 7977812	2	Lock nut	Låsmutter	5
0330	27	45 69 570			2	Spacer ring	Distansring	
0335	27	46 87 679		21)	2	Spacer ring	Distansring	
0340	28	48 35 930			2	Bellows	Balg	
0345	29	49 05 899			2	Bump stop	Genomslagsstopp	
0350	29	45 65 354		21)	2	Bump stop	Genomslagsstopp	
0360	30	45 65 438		CODE=BH	2	Spring	Fjäder	
0380	30	45 65 446		CODE=BJ	2	Spring	Fjäder	
0400	30	45 66 741		CODE=BK	2	Spring	Fjäder	
0420	31	45 65 404			2	Spring support	Fjäderstöd	
0430	32	45 69 588			2	Washer	Bricka	
0440	33	48 37 035			2	Bushing	Bussning	
0450	34	42 46 351			2	Sleeve	Hylsa	
0460	35	45 65 339			2	Bracket	Konsol	
0470	36	48 37 043			2	Bushing	Bussning	
0480	37	45 65 396			2	Washer	Bricka	
0490	38	43 47 910			8	Screw	Skruv	
0500	39	48 36 052		RH	1	Protecting plate	Skyddsplåt	
0510	40	49 08 174		0,3 MM	X	Shim	Shim	
0520	41	49 08 166		0,3 MM	X	Shim	Shim	

21. Cars with automatic level control. Bilar med automatisk nivåkontroll

MASTER INDEX

0	General	1-A02
2	Engine	1-C02
3A	Electrical systems, instruments	1-F02
4	Transmission	1-I02
5	Brakes	1-K02
6	Front assembly, Steering	1-L02
7	Suspension, Wheels	2-A02
8A	Body, external	2-B02
8B	Body, internal	2-F02
8C	Body, heating and ventilation	2-H02
8D	Tool, Labels	2-I02
9	Accessories	2-J02
10	Numerical register	3-A02

7 GROUP INDEX

Front suspension	2-A06
Wheel	2-A08
Rear axle	2-A10

2-B02

8A

Body, external
Kaross, utvändig
Carrocería, exterior

TABLE OF CONTENTS

Car body		
Front- and centre floor	8A : 5	2-B06
Rear floor	8A : 7	2-B08
Roof	8A : 9	2-B10
Sun roof	8A : 11	2-B12
Cowl plate	8A : 13	2-B14
Wheel housing, front	8A : 15	2-B16
Wheel housing, rear	8A : 17	2-B18
Side plate	8A : 19	2-B20
Door frame	8A : 21	2-B22
Plugs	8A : 23	2-B24
Hood, front, fenders		
Hood, hood hinges and hood lock	8A : 25	2-C02
Front member, grille	8A : 27	2-C04
Front fender	8A : 29	2-C06
Wheel arch liner	8A : 31	2-C08
Doors, trunk lid		
Front doors, hinges, window regulators	8A : 33	2-C10
Rear doors, hinges, window regulators	8A : 35	2-C12
Door lock, front door	8A : 37	2-C14
Door lock, rear door	8A : 39	2-C16
Trunk door, hinges, lock	8A : 41	2-C18
Outside handle	8A : 43	2-C20
Lock- and lock cylinder sets	8A : 45	2-C22
External details, glass, sealings		
Emblem	8A : 47	2-C24
Decor	8A : 49	2-D02
External mirror	8A : 51	2-D04
Windscreen	8A : 53	2-D06
Rear window	8A : 55	2-D08
Doors and side windows	8A : 57	2-D10
Other sealings	8A : 59	2-D12
Bumpers and touch-up paint		
Bumper, front	8A : 61	2-D14
Bumper, rear	8A : 63	2-D16
Touch-up paint, 1-can	8A : 65	2-D18
Touch-up paint, 2-can	8A : 67	2-D20
Touch-up paint, two-coat type	8A : 69	2-D22
Touch-up paint, other paint	8A : 71	2-D24
Complete sets		
Car body, external	8A : 73	2-E02

MASTER INDEX

0	General	1-A02
2	Engine	1-C02
3A	Electrical systems, instruments	1-F02
4	Transmission	1-I02
5	Brakes	1-K02
6	Front assembly, Steering	1-L02
7	Suspension, Wheels	2-A02
8A	Body, external	2-B02
8B	Body, internal	2-F02
8C	Body, heating and ventilation	2-H02
8D	Tool, Labels	2-I02
9	Accessories	2-J02
10	Numerical register	3-A02

8A GROUP INDEX

Car body	2-B06
Hood, front, fenders	2-C02
Doors, trunk lid	2-C10
External details, glass, sealings	2-C24
Bumpers and touch-up paint	2-D14
Complete sets	2-E02

2-B03

INNEHÅLLSFÖRTECKNING

Karosseristomme		
Främre och mittre golv	8A : 5	2-B06
Bakre golv	8A : 7	2-B08
Tak	8A : 9	2-B10
Soltak	8A : 11	2-B12
Torpedplåt	8A : 13	2-B14
Hjulhus, främre	8A : 15	2-B16
Hjulhus, bakre	8A : 17	2-B18
Sidoplåtar	8A : 19	2-B20
Dörram	8A : 21	2-B22
Pluggar	8A : 23	2-B24
Motorhuv, front, skärmar		
Motorhuv, huvgångjärn och huvlås	8A : 25	2-C02
Frontbalk, grill	8A : 27	2-C04
Framskärm	8A : 29	2-C06
Innerskärm	8A : 31	2-C08
Dörrar, bagagerumslucka		
Framdörrar, gångjärn, fönsterhissar	8A : 33	2-C10
Bakdörrar, gångjärn, fönsterhissar	8A : 35	2-C12
Dörrlås, framdörr	8A : 37	2-C14
Dörrlås, bakdörr	8A : 39	2-C16
Baklucka, gångjärn, lås	8A : 41	2-C18
Ytterhandtag	8A : 43	2-C20
Lås- och låscylindersatser	8A : 45	2-C22
Utvändiga detaljer, glas, tätningslister		
Emblem	8A : 47	2-C24
Dekor	8A : 49	2-D02
Spoiler	8A :	0-000
Utvändiga backspeglar	8A : 51	2-D04
Vindruta	8A : 53	2-D06
Bakruta	8A : 55	2-D08
Dörr- och sidorutor	8A : 57	2-D10
Övriga tätningslister	8A : 59	2-D12
Stötfångare och bättringsfärg		
Stötfångare, främre	8A : 61	2-D14
Stötfångare, bakre	8A : 63	2-D16
Bättringsfärg, 1-komponent	8A : 65	2-D18
Bättringsfärg, 2-komponent	8A : 67	2-D20
Bättringsfärg, tvåskiktstyp	8A : 69	2-D22
Bättringsfärg, övrig färg	8A : 71	2-D24
Satser:		
Kaross, utvändig	8A : 73	2-E02

2-B04

SUMARIO

Cuerpo de la carroceria		
Piso del. y tras.	8A : 5	2-B06
Piso tras.	8A : 7	2-B08
Techo	8A : 9	2-B10
Escotilla techo	8A : 11	2-B12
Placa torpedo	8A : 13	2-B14
Paso rueda, Del	8A : 15	2-B16
Huercos de rueda Tras	8A : 17	2-B18
Placas laterales	8A : 19	2-B20
Bastidor de puertas	8A : 21	2-B22
Tapones	8A : 23	2-B24
Capot, plancha frontal, guardabarros		
Capot, bisagras de capot y cerradura de capot	8A : 25	2-C02
Viga del, parilla	8A : 27	2-C04
Guardabarros del	8A : 29	2-C06
Guardabarro interior	8A : 31	2-C08
Puertas, tapa de cofre		
Porta delantera, bisagras, levantcristales	8A : 33	2-C10
Porta trasera, bisagras, levantcristales	8A : 35	2-C12
Cerraduras de puerta, Del	8A : 37	2-C14
Tapa de cofre, bisagras, cerradura	8A : 41	2-C18
Empunaduras exteriores	8A : 43	2-C20
Cerraduras y cilindros de cerradura	8A : 45	2-C22
Detalles exteriores, vidrios, juntas		
Emblemas	8A : [illegible]	2-C24
Bastidor	8A : 49	2-D02
Espejos retrovisores exteriores	8A : 51	2-D04
Parabrisas	8A : 53	2-D06
Luna trasera	8A : 55	2-D08
Ventanilla de puerta y lateral	8A : 57	2-D10
Otras juntas	8A : 59	2-D12
Parachoques y pintura de retoque		
Parachoques, Del	8A : 61	2-D14
Parachoques, Tras	8A : 63	2-D16
Pintura de retoque, tipo 1-componentes	8A : 65	2-D18
Pintura de retoque, tipo 2-componentes	8A : 67	2-D20
Pintura de retoque, tipo de dos capas	8A : 69	2-D22
Pintura de retoque, otro pintura	8A : 71	2-D24
Juegos completos		
Carosseria, exterior	8A : 73	2-E02

MASTER INDEX

0	General	1-A02
2	Engine	1-C02
3A	Electrical systems, instruments	1-F02
4	Transmission	1-I02
5	Brakes	1-K02
6	Front assembly, Steering	1-L02
7	Suspension, Wheels	2-A02
8A	Body, external	2-B02
8B	Body, internal	2-F02
8C	Body, heating and ventilation	2-H02
8D	Tool, Labels	2-I02
9	Accessories	2-J02
10	Numerical register	3-A02

8A GROUP INDEX

Car body	2-B06
Hood, front, fenders	2-C02
Doors, trunk lid	2-C10
External details, glass, sealings	2-C24
Bumpers and touch-up paint	2-D14
Complete sets	2-E02

2-B06

Front and centre floor

Främre och mittre golv

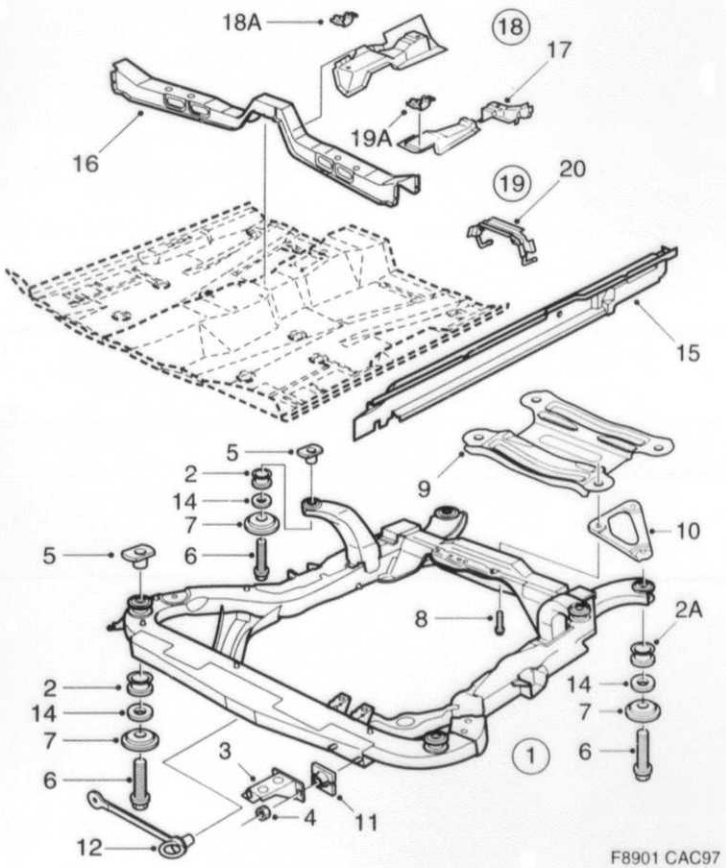

F8901 CAC97
08A/0100

0100	Pos	Part No/Art nr	K S	Notes/Anmärkningar	Qty/ Antal	Description	Benämning	S L
0010				47)	1	Body	Kaross	
0020	1	50 56 114			1	Frame	Ram	
0030	2	45 66 923			4	.Bushing	.Bussning	
0035	2A	49 09 024			2	.Bushing	.Bussning	
0040	3	45 93 836			2	Bracket	Konsol	
0050	4	79 77 952			4	Hexagon nut	Sexkantsmutter	5
0060	5	43 47 589			4	Cage nut	Korgmutter	
0070	6	45 97 985			6	Screw	Skruv	
0080	7	45 97 993			6	Washer	Bricka	
0090	8	92 92 699			4	Screw	Skruv	5
0100	9	49 08 059			1	Crossmember	Tvärbalk	
0110	10	45 99 593		LH	1	Support plate	Stödplatta	
0120	10	45 99 601		RH	1	Support plate	Stödplatta	
0130	11	43 33 704			4	Expanding nut	Expandermutter	3
0140	12	48 26 996			1	Plug	Plugg	
0155	14	49 40 607			6	Spacer	Distans	
0160								
0170	15	47 24 936		LH	1	Sill	Tröskel	
0180	15	47 24 944		RH	1	Sill	Tröskel	
0190	16	48 25 071			1	Beam	Balk	
0200	17	48 25 097		LH	1	Reinforcement	Förstärkning	
0210	17	48 25 105		RH	1	Reinforcement	Förstärkning	
0220	18	48 25 113		LH	1	Support member	Stödbalk	
0230	18	48 25 121		RH	1	Support member	Stödbalk	
0240	18A	48 27 895		LH	1	.Seat bracket	.Stolfäste	
0250	18A	48 27 903		RH	1	.Seat bracket	.Stolfäste	
0260	19	48 25 139		LH	1	Support member	Stödbalk	
0270	19	48 25 147		RH	1	Support member	Stödbalk	
0280	19A	48 27 911		LH	1	.Seat bracket	.Stolfäste	
0290	19A	48 27 929		RH	1	.Seat bracket	.Stolfäste	
0300	20	48 25 089			1	Exhaust pipe mounting	Avgasrörupphängning	

47. Only current production design. Please contact our order office in Nyköping. Endast produktionsaktuellt utförande. Var vänlig kontakta orderkontoret i Nyköping.

MASTER INDEX

0	General	1-A02
2	Engine	1-C02
3A	Electrical systems, instruments	1-F02
4	Transmission	1-I02
5	Brakes	1-K02
6	Front assembly, Steering	1-L02
7	Suspension, Wheels	2-A02
8A	Body, external	2-B02
8B	Body, internal	2-F02
8C	Body, heating and ventilation	2-H02
8D	Tool, Labels	2-I02
9	Accessories	2-J02
10	Numerical register	3-A02

8A GROUP INDEX

Car body	2-B06
Hood, front, fenders	2-C02
Doors, trunk lid	2-C10
External details, glass, sealings	2-C24
Bumpers and touch-up paint	2-D14
Complete sets	2-E02

2-B08 Rear floor / Bakre golv

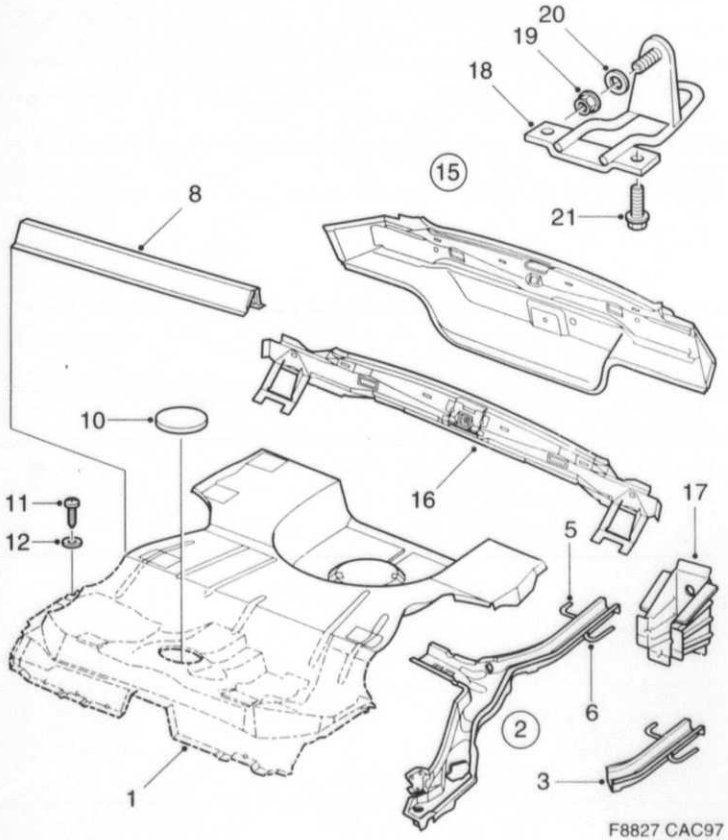

F8827 CAC97
08A/0125

0125	Pos	Part No/Art nr	K S	Notes/Anmärkningar	Qty/ Antal	Description	Benämning	S L
0010	1	48 25 055			1	Floor	Golv	
0020								
0030	2	48 25 014		LH	1	Floor member	Golvbalk	
0040	2	48 25 022		RH	1	Floor member	Golvbalk	
0050	3	48 25 030		LH	1	.Floor member	.Golvbalk	
0060	3	48 25 048		RH	1	.Floor member	.Golvbalk	
0070	5	48 28 497		LH	1	.Bracket	.Konsol	
0080	6	48 28 505		RH	1	.Bracket	.Konsol	
0090								
0100	8	47 20 009			1	Member	Balk	
0110								
0120	10	82 28 702			1	Seal	Tätning	6
0130	11	44 95 065			2	Screw	Skruv	5
0140	12	79 16 521			2	Washer	Bricka	5
0150								
0160	15	48 25 196			1	Rear end panel	Akterspegel	
0170	16	47 20 132			1	.Sill	.Tröskel	
0180	17	48 26 194		LH	1	.Spacer member	.Distansbalk	
0190	17	48 26 202		RH	1	.Spacer member	.Distansbalk	
0200								
0210	18	45 96 110			1	Towing eye	Dragögla	
0220	19	79 67 979			1	Nut	Mutter	5
0230	20	89 34 259			1	Washer	Bricka	5
0240	21	81 30 064			2	Screw	Skruv	5

MASTER INDEX

0	General	1-A02
2	Engine	1-C02
3A	Electrical systems, instruments	1-F02
4	Transmission	1-I02
5	Brakes	1-K02
6	Front assembly, Steering	1-L02
7	Suspension, Wheels	2-A02
8A	Body, external	2-B02
8B	Body, internal	2-F02
8C	Body, heating and ventilation	2-H02
8D	Tool, Labels	2-I02
9	Accessories	2-J02
10	Numerical register	3-A02

8A GROUP INDEX

Car body	2-B06
Hood, front, fenders	2-C02
Doors, trunk lid	2-C10
External details, glass, sealings	2-C24
Bumpers and touch-up paint	2-D14
Complete sets	2-E02

2-B10 Roof / Tak

0150	Pos	Part No/Art nr	K S	Notes/Anmärkningar	Qty/ Antal	Description	Benämning	S L
0010	1	48 26 004			1	Roof	Tak	
0020	1	48 26 061		SR	1	Roof	Tak	
0030								
0040	2	48 26 038			1	Beam	Balk	
0050	3	48 26 046			1	Beam	Balk	
0060	4	46 85 897			8	Nut	Mutter	

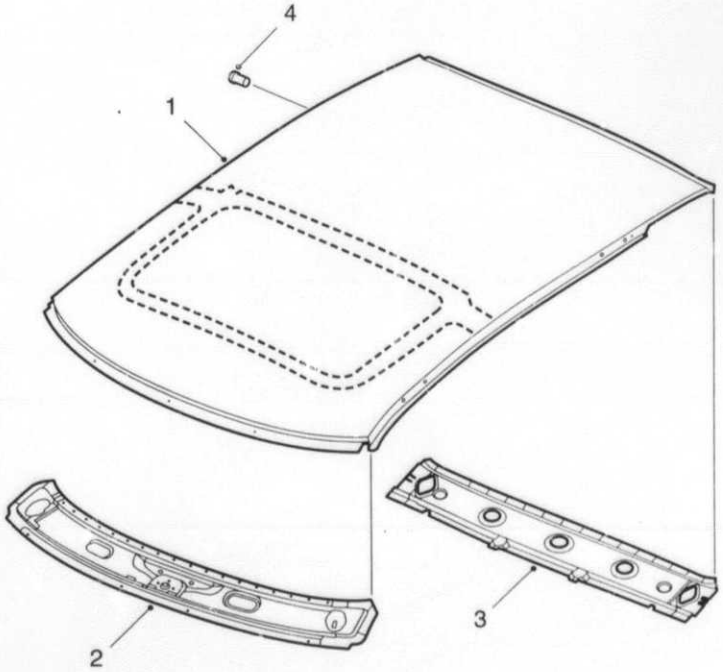

F8828 CAC97
08A/0150

MASTER INDEX

0	General	1-A02
2	Engine	1-C02
3A	Electrical systems, instruments	1-F02
4	Transmission	1-I02
5	Brakes	1-K02
6	Front assembly, Steering	1-L02
7	Suspension, Wheels	2-A02
8A	Body, external	2-B02
8B	Body, internal	2-F02
8C	Body, heating and ventilation	2-H02
8D	Tool, Labels	2-I02
9	Accessories	2-J02
10	Numerical register	3-A02

8A GROUP INDEX

Car body	2-B06
Hood, front, fenders	2-C02
Doors, trunk lid	2-C10
External details, glass, sealings	2-C24
Bumpers and touch-up paint	2-D14
Complete sets	2-E02

2-B12

Sun roof
Soltak

0225	Pos	Part No/Art nr	K S	Notes/Anmärkningar	Qty/ Antal	Description	Benämning	S L
0010	1	46 99 906			1	Glass hatch	Glaslucka	
0020	2	46 99 914		LH	1	Cover	Avtäckning	
0030	2	46 99 922		RH	1	Cover	Avtäckning	
0040	4	46 99 930			1	Cover	Avtäckning	
0050	6	46 99 948			1	Sun shade	Solskärm	
0060	7	46 99 955			4	Slide dog	Glidklack	
0070	8	46 99 963			1	Roof gutter	Ränna	
0080		47 65 079		LH	1	Dog	Glidsko	
0090		47 65 087		RH	1	Dog	Glidsko	
0100	10	46 99 971			1	Wind deflector	Vindavvisare	
0110	11	47 65 129			2	.Mounting kit	.Monteringssats	
0120	12	47 65 137			2	.Mounting kit	.Monteringssats	
0130	16	47 65 012		LH	1	Cam follower	Lyftare	
0140	16	47 65 020		RH	1	Cam follower	Lyftare	
0150	17	47 65 038			2	Slide unit	Glidenhet	
0160						with cable	med wire	
0170	18	47 65 053		LH	1	Guide	Styrning	
0180	18	47 65 061		RH	1	Guide	Styrning	
0190	23	49 27 430			1	Electric motor	Elmotor	
0100	31	45 52 444			2	Draining hose	Dräneringsslang	
0210	32	45 52 451			2	Draining hose	Dräneringsslang	
0220	33	85 36 419			2	Clip	Clips	5
0230	34	40 87 599			19	Screw	Skruv	5
0240	35	46 99 997			1	Frame	Ram	
0250	36	47 65 004			2	Lock bolt	Låsbult	
0260		47 65 095			2	Lock bolt	Låsbult	
0270	40	43 04 283			2	Plug	Plugg	5
0280	42	43 33 480			2	Plug	Plugg	5
0290		47 65 103			2	Damper strip	Dämpningslist	
0300		47 65 111			2	Damper strip	Dämpningslist	

MASTER INDEX

0	General	1-A02
2	Engine	1-C02
3A	Electrical systems, instruments	1-F02
4	Transmission	1-I02
5	Brakes	1-K02
6	Front assembly, Steering	1-L02
7	Suspension, Wheels	2-A02
8A	Body, external	2-B02
8B	Body, internal	2-F02
8C	Body, heating and ventilation	2-H02
8D	Tool, Labels	2-I02
9	Accessories	2-J02
10	Numerical register	3-A02

8A GROUP INDEX

Car body	2-B06
Hood, front, fenders	2-C02
Doors, trunk lid	2-C10
External details, glass, sealings	2-C24
Bumpers and touch-up paint	2-D14
Complete sets	2-E02

Car body

2-B14 Cowl plate

Karosskrov

Torpedplåt

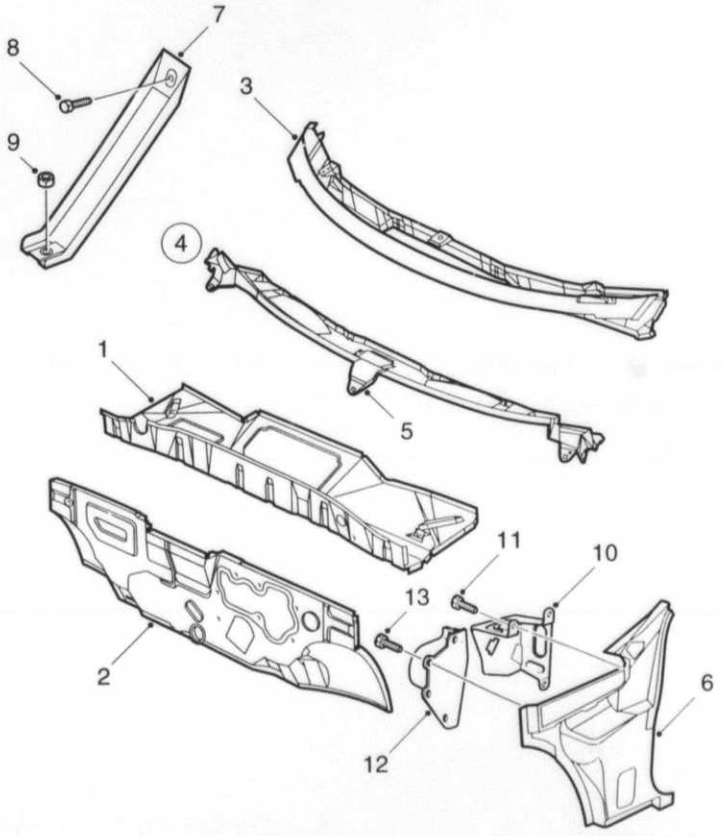

F8829 CAC97
08A/0250

0250	Pos	Part No/Art nr	K S	Notes/Anmärkningar	Qty/ Antal	Description	Benämning	S L
0010	1	48 26 244		LHD	1	Cowl plate	Torpedplåt	
0020	1	48 26 269		RHD	1	Cowl plate	Torpedplåt	
0030	2	48 26 293		LHD	1	Cowl plate	Torpedplåt	
0040	2	48 26 327		RHD	1	Cowl plate	Torpedplåt	
0050	3	48 26 301			1	Windscreen member	Vindrutebalk	
0060								
0070	4	48 26 319		LHD	1	Windscreen member	Vindrutebalk	
0080	4	48 28 521		RHD	1	Windscreen member	Vindrutebalk	
0090	5	48 28 513			1	.Bracket	.Konsol	
0100								
0110	6	48 26 277		LH	1	Cover plate	Täckplåt	
0120	6	48 26 285		RH	1	Cover plate	Täckplåt	
0130								
0140	7	48 26 376		LHD	1	Support	Stöd	
0150	7	48 26 368		RHD	1	Support	Stöd	
0160	8	79 79 610			1	Screw	Skruv	5
0170	9	79 85 377			1	Nut	Mutter	5
0180								
0190	10	48 26 178		LH	1	Bracket	Konsol	
0200	10	48 26 186		RH	1	Bracket	Konsol	
0210	11	79 78 281			8	Screw	Skruv	5
0220	12	48 26 152		LH	1	Bracket	Konsol	
0230	12	48 26 160		RH	1	Bracket	Konsol	
0240	13	79 78 190			6	Screw	Skruv	5

MASTER INDEX

0	General	1-A02
2	Engine	1-C02
3A	Electrical systems, instruments	1-F02
4	Transmission	1-I02
5	Brakes	1-K02
6	Front assembly, Steering	1-L02
7	Suspension, Wheels	2-A02
8A	Body, external	2-B02
8B	Body, internal	2-F02
8C	Body, heating and ventilation	2-H02
8D	Tool, Labels	2-I02
9	Accessories	2-J02
10	Numerical register	3-A02

8A GROUP INDEX

Car body	2-B06
Hood, front, fenders	2-C02
Doors, trunk lid	2-C10
External details, glass, sealings	2-C24
Bumpers and touch-up paint	2-D14
Complete sets	2-E02

2-B16 Wheel housing, front / Hjulhus, främre

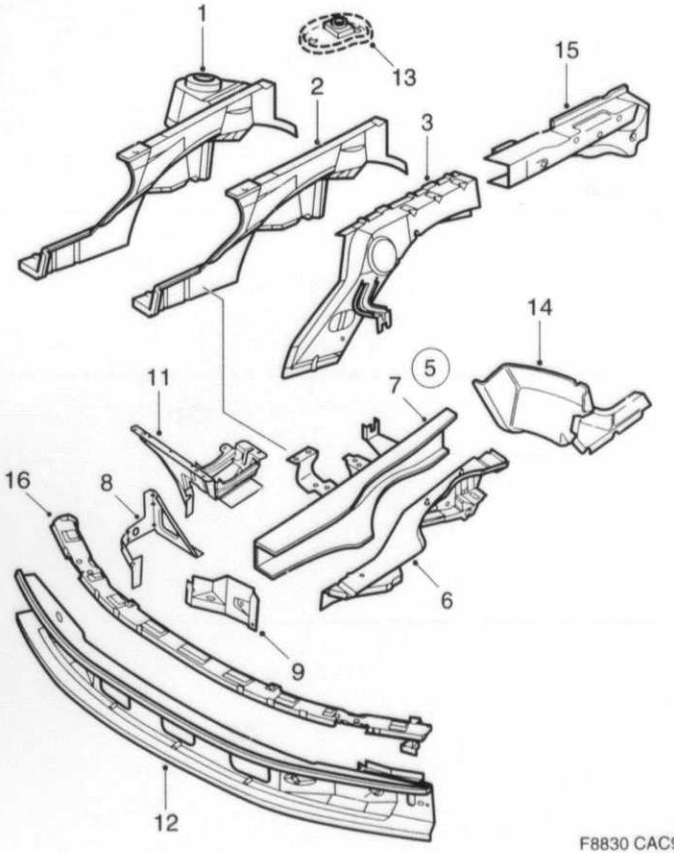

F8830 CAC97
08A/0260

0260	Pos	Part No/Art nr	K S	Notes/Anmärkningar	Qty/ Antal	Description	Benämning	S L
0010	1	47 24 951		LH	1	Wheel housing	Hjulhus	
0020	1	47 24 969		RH	1	Wheel housing	Hjulhus	
0030	2	47 24 977		LH	1	.Wheel housing	.Hjulhus	
0040	2	47 24 985		RH	1	.Wheel housing	.Hjulhus	
0050	3	47 24 993		LH	1	.Reinforcement	.Förstärkning	
0060	3	48 25 006		RH	1	.Reinforcement	.Förstärkning	
0070								
0080	5	48 29 032		LH	1	Side member	Sidobalk	
0090	5	48 29 040		RH	1	Side member	Sidobalk	
0100	6	47 24 894		LH	1	.Side member	.Sidobalk	
0110	6	47 24 902		RH	1	.Side member	.Sidobalk	
0120	7	47 24 910		LH	1	.Reinforcement	.Förstärkning	
0130	7	47 24 928		RH	1	.Reinforcement	.Förstärkning	
0140	8	48 28 471		LH	1	..Support plate	..Stödplåt	
0150	8	48 28 489		RH	1	..Support plate	..Stödplåt	
0160	9	48 25 170		LH	1	.Spacer member	.Distansbalk	
0170	9	48 25 188		RH	1	.Spacer member	.Distansbalk	
0180								
0190	11	47 24 803			1	Bracket	Konsol	
0200	12	47 20 397			1	Front member	Frontbalk	
0210	13	43 47 589			1	Cage nut	Korgmutter	
0220	14	48 26 210		LH	1	Support	Stöd	
0230	14	48 26 228		RH	1	Support	Stöd	
0240								
0250	15	48 26 079		LH	1	Reinforcement	Förstärkning	
0260	15	48 26 087		RH	1	Reinforcement	Förstärkning	
0270								
0280	16	48 26 103			1	Profiled beam	Profilbalk	

MASTER INDEX

0	General	1-A02
2	Engine	1-C02
3A	Electrical systems, instruments	1-F02
4	Transmission	1-I02
5	Brakes	1-K02
6	Front assembly, Steering	1-L02
7	Suspension, Wheels	2-A02
8A	Body, external	2-B02
8B	Body, internal	2-F02
8C	Body, heating and ventilation	2-H02
8D	Tool, Labels	2-I02
9	Accessories	2-J02
10	Numerical register	3-A02

8A GROUP INDEX

Car body	2-B06
Hood, front, fenders	2-C02
Doors, trunk lid	2-C10
External details, glass, sealings	2-C24
Bumpers and touch-up paint	2-D14
Complete sets	2-E02

2-B18 Wheel housing, rear / Hjulhus, bakre

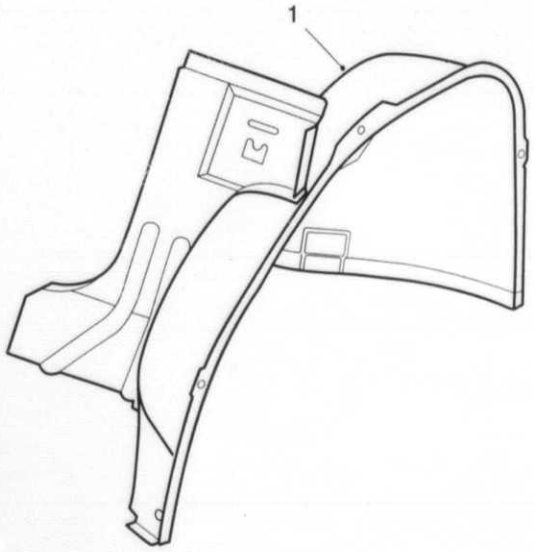

F8831 CAC97
08A/0300

	Pos	Part No/Art nr	K S	Notes/Anmärkningar	Qty/ Antal	Description	Benämning	S L
0300								
0010	1	47 20 264		LH	1	Wheel housing	Hjulhus	
0020	1	47 20 256		RH	1	Wheel housing	Hjulhus	

MASTER INDEX

0	General	1-A02
2	Engine	1-C02
3A	Electrical systems, instruments	1-F02
4	Transmission	1-I02
5	Brakes	1-K02
6	Front assembly, Steering	1-L02
7	Suspension, Wheels	2-A02
8A	Body, external	2-B02
8B	Body, internal	2-F02
8C	Body, heating and ventilation	2-H02
8D	Tool, Labels	2-I02
9	Accessories	2-J02
10	Numerical register	3-A02

8A GROUP INDEX

Car body	2-B06
Hood, front, fenders	2-C02
Doors, trunk lid	2-C10
External details, glass, sealings	2-C24
Bumpers and touch-up paint	2-D14
Complete sets	2-E02

2-B20

Side plate
Sidoplåt

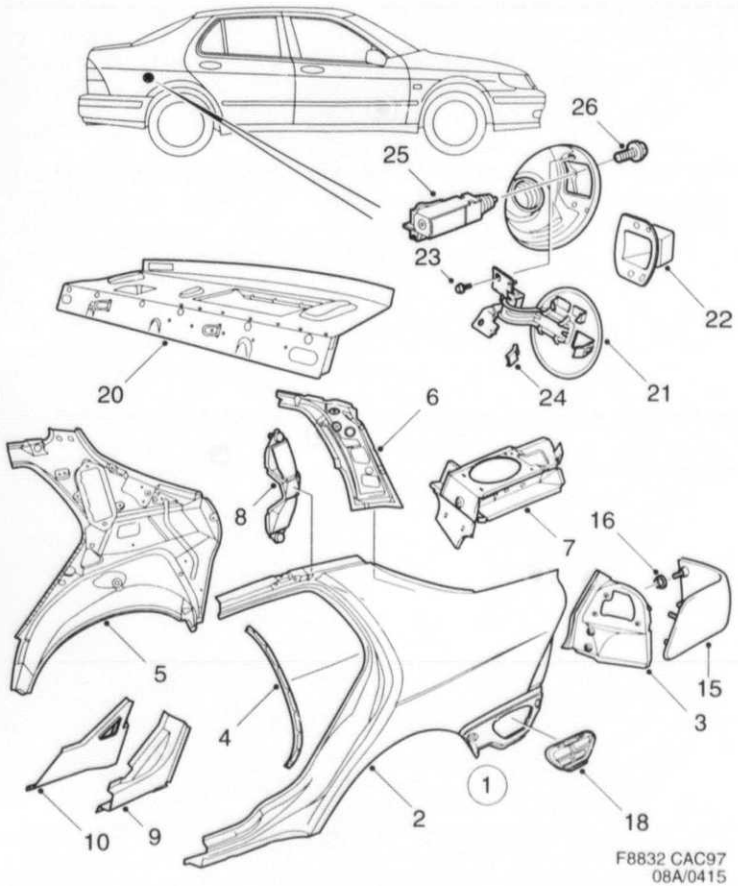

F8832 CAC97
08A/0415

0415	Pos	Part No/Art nr	K S	Notes/Anmärkningar	Qty/ Antal	Description	Benämning	S L
0010	1	47 20 033		LH	1	Side plate	Sidoplåt	
0020	1	47 20 041		RH	1	Side plate	Sidoplåt	
0030	2	47 20 074		LH	1	.Side plate	.Sidoplåt	
0040	2	47 20 082		RH	1	.Side plate	.Sidoplåt	
0050	3	47 20 090		LH	1	.Attaching frame	.Fästram	
0060	3	47 20 108		RH	1	.Attaching frame	.Fästram	
0070	4	47 20 058		LH	1	Carrier	Hållare	
0080	4	47 20 066		RH	1	Carrier	Hållare	
0090								
0100	5	47 20 157		LH	1	Side plate	Sidoplåt	
0110	5	47 20 165		RH	1	Side plate	Sidoplåt	
0120	6	47 20 231		LH	1	C-pillar	C-stolpe	
0130	6	47 20 249		RH	1	C-pillar	C-stolpe	
0140	7	47 20 272		LH	1	Support	Stöd	
0150	7	47 20 280		RH	1	Support	Stöd	
0160	8	47 20 330		LH	1	Reinforcement	Förstärkning	
0170	8	47 20 348		RH	1	Reinforcement	Förstärkning	
0180	9	47 20 371		LH	1	Reinforcing plate	Förstärkningsplåt	
0190	9	47 20 389		RH	1	Reinforcing plate	Förstärkningsplåt	
0200	10	47 20 355		LH	1	Reinforcing plate	Förstärkningsplåt	
0210	10	47 20 363		RH	1	Reinforcing plate	Förstärkningsplåt	
0220								
0230	15	49 55 175		LH	1	Corner filler panel	Hörnutfyllnadspanel	
0240	15	49 55 183		RH	1	Corner filler panel	Hörnutfyllnadspanel	
0250	16	79 77 929			8	Nut	Mutter	5
0260								
0270	18	45 41 579			2	Exhaust grille	Evakueringsgaller	5
0280								
0290	20	48 26 053			1	Support	Stöd	
0300								
0310	21	48 51 093			1	Filler cap	Tanklock	
0320	22	45 54 218			1	Cover	Avtäckning	
0330	23	79 82 325			2	Screw	Skruv	5
0340	24	47 69 626			1	Wear protection	Slitskydd	
0350	25	48 52 067			1	Solenoid	Solenoid	
0360	26	48 51 481			1	Attachment	Fäste	

MASTER INDEX

0	General	1-A02
2	Engine	1-C02
3A	Electrical systems, instruments	1-F02
4	Transmission	1-I02
5	Brakes	1-K02
6	Front assembly, Steering	1-L02
7	Suspension, Wheels	2-A02
8A	Body, external	2-B02
8B	Body, internal	2-F02
8C	Body heating and ventilation	2-H02
8D	Tool, Labels	2-I02
9	Accessories	2-J02
10	Numerical register	3-A02

8A GROUP INDEX

Car body	2-B06
Hood, front, fenders	2-C02
Doors, trunk lid	2-C10
External details, glass, sealings	2-C24
Bumpers and touch-up paint	2-D14
Complete sets	2-E02

2-B22 Door frame / Dörram

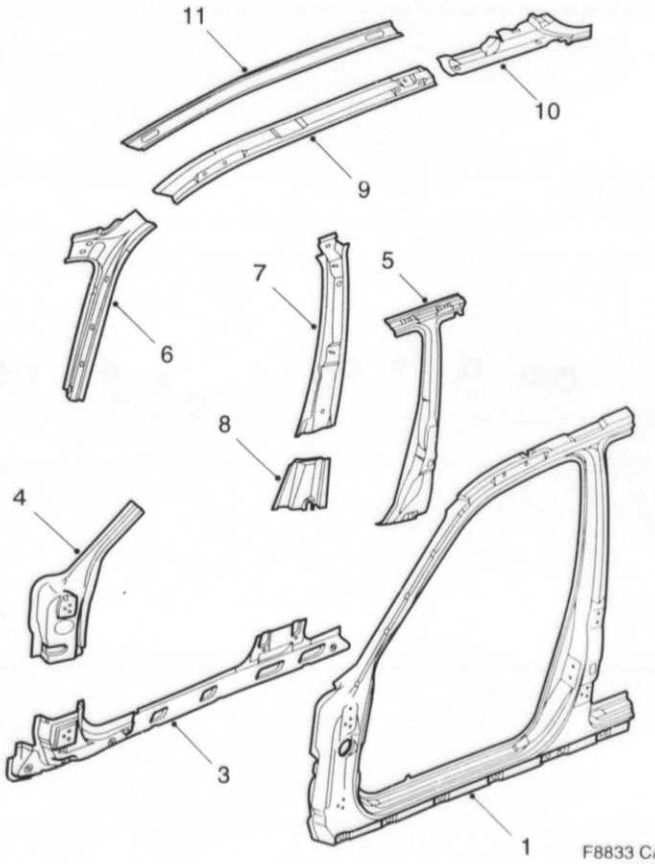

F8833 CAC97
08A/0450

0450	Pos	Part No/Art nr	K S	Notes/Anmärkningar	Qty/ Antal	Description	Benämning	S L
0010	1	47 24 878		LH	1	Door frame	Dörram	
0020	1	47 24 886		RH	1	Door frame	Dörram	
0030	3	47 20 199		LH	1	Sill	Tröskel	
0040	3	47 20 207		RH	1	Sill	Tröskel	
0050								
0060	4	47 20 298		LH	1	Reinforcement	Förstärkning	
0070	4	47 20 306		RH	1	Reinforcement	Förstärkning	
0080	5	47 20 215		LH	1	Reinforcement	Förstärkning	
0090	5	47 20 223		RH	1	Reinforcement	Förstärkning	
0100	6	47 20 173		LH	1	A-pillar	A-stolpe	
0110	6	47 20 181		RH	1	A-pillar	A-stolpe	
0111	7	47 24 837		LH	1	Reinforcement	Förstärkning	
0112	7	47 24 845		RH	1	Reinforcement	Förstärkning	
0113	8	47 24 852		LH	1	Reinforcement	Förstärkning	
0114	8	47 24 860		RH	1	Reinforcement	Förstärkning	
0120	9	47 20 116		LH	1	Cover plate	Täckplåt	
0130	9	47 20 124		RH	1	Cover plate	Täckplåt	
0140	10	47 20 314		LH	1	Cover plate	Täckplåt	
0150	10	47 20 322		RH	1	Cover plate	Täckplåt	
0160	11	47 24 811		LH	1	Cover plate	Täckplåt	
0170	11	47 24 829		RH	1	Cover plate	Täckplåt	

MASTER INDEX

0	General	1-A02
2	Engine	1-C02
3A	Electrical systems, instruments	1-F02
4	Transmission	1-I02
5	Brakes	1-K02
6	Front assembly, Steering	1-L02
7	Suspension, Wheels	2-A02
8A	Body, external	2-B02
8B	Body, internal	2-F02
8C	Body, heating and ventilation	2-H02
8D	Tool, Labels	2-I02
9	Accessories	2-J02
10	Numerical register	3-A02

8A GROUP INDEX

Car body	2-B06
Hood, front, fenders	2-C02
Doors, trunk lid	2-C10
External details, glass, sealings	2-C24
Bumpers and touch-up paint	2-D14
Complete sets	2-E02

2-B24

Plugs

Pluggar

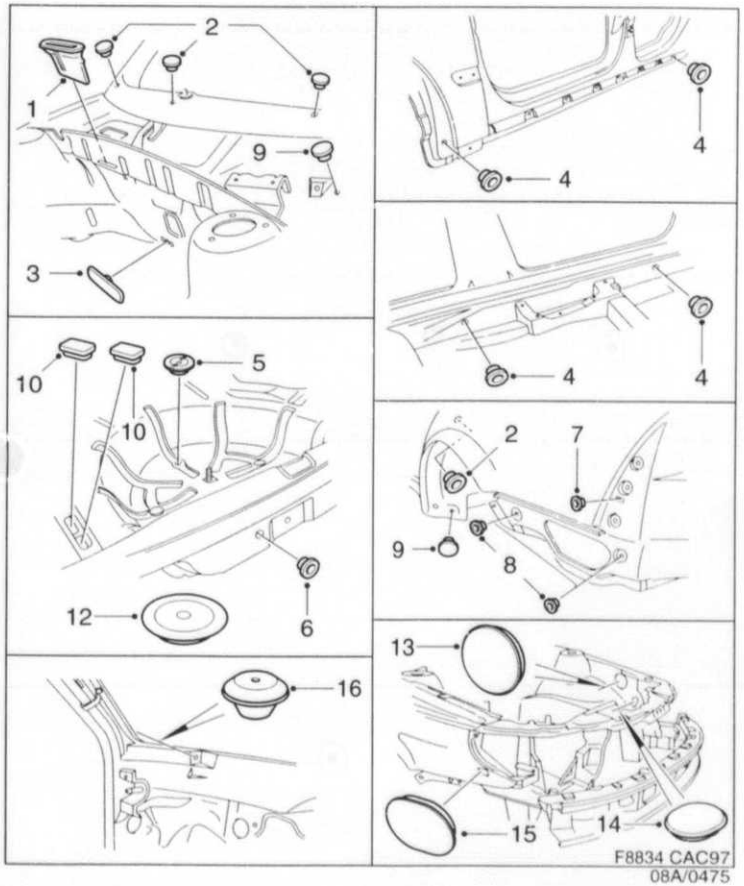

0475	Pos	Part No/Art nr	K S	Notes/Anmärkningar	Qty/ Antal	Description	Benämning	S L
0010	1	45 99 544			1	Draining plug	Dräneringsplugg	
0020	2	92 67 808		HOLE ∅ 20MM	5	Plug	Plugg	5
0030	3	48 25 808			1	Plug	Plugg	
0040	4	79 82 770		HOLE ∅ 16MM	10	Plug	Plugg	
0050	5	43 33 506		HOLE ∅ 35MM	1	Plug	Plugg	5
0060	6	79 82 796		HOLE ∅ 25MM	1	Plug	Plugg	
0070	7	46 85 293		OVAL HOLE	2	Plug	Plugg	
0080	8	79 82 747		HOLE ∅ 8MM	4	Plug	Plugg	
0090	9	95 50 476		HOLE ∅ 15MM	3	Plug	Plugg	5
0100	10	48 25 634			4	Seal	Tätning	
0110	12	43 33 498		HOLE ∅ 35MM	17	Plug	Plugg	5
0120	13	49 20 922		HOLE ∅ 90MM	2	Plug	Plugg	
0130	14	49 21 037		OVAL HOLE	1	Plug	Plugg	
0140	15	49 21 045			2	Seal	Tätning	
0150	16	43 33 555		HOLE ∅ 12MM	2	Plug	Plugg	

MASTER INDEX

0	General	1-A02
2	Engine	1-C02
3A	Electrical systems, instruments	1-F02
4	Transmission	1-I02
5	Brakes	1-K02
6	Front assembly, Steering	1-L02
7	Suspension, Wheels	2-A02
8A	Body, external	2-B02
8B	Body, internal	2-F02
8C	Body, heating and ventilation	2-H02
8D	Tool, Labels	2-I02
9	Accessories	2-J02
10	Numerical register	3-A02

8A GROUP INDEX

Car body	2-B06
Hood, front, fenders	2-C02
Doors, trunk lid	2-C10
External details, glass, sealings	2-C24
Bumpers and touch-up paint	2-D14
Complete sets	2-E02

2-C02 Hood, hinges and locks — Huv, gångjärn och lås

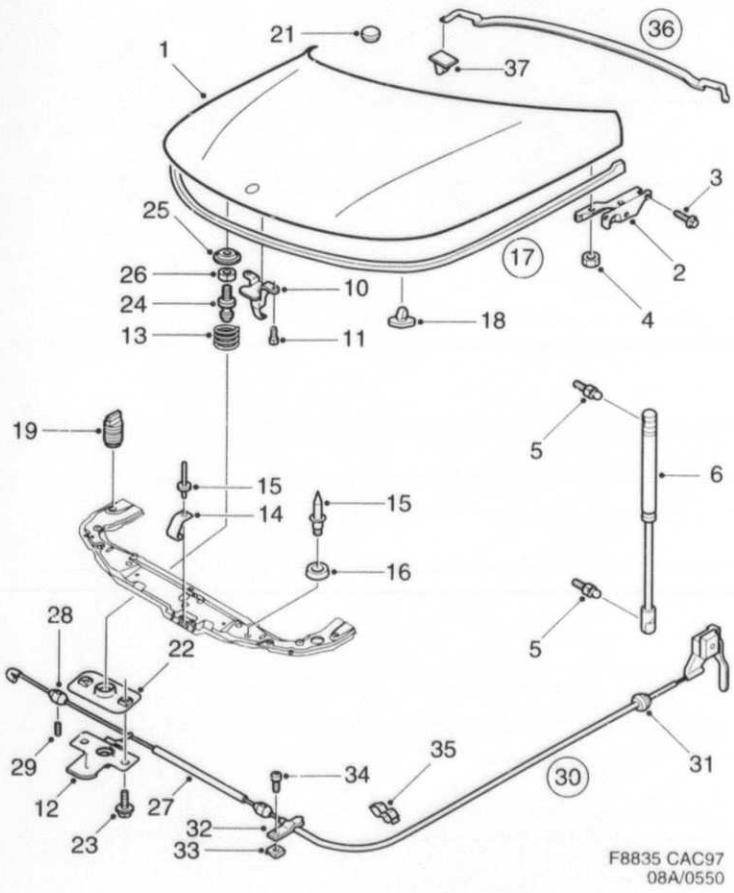

..550	Pos	Part No/Art nr	K S	Notes/Anmärkningar	Qty/ Antal	Description	Benämning	S L
0010	1	48 54 634			1	Bonnet	Motorhuv	
0020	2	48 52 877		LH	1	Hinge	Gångjärn	
0030	2	48 52 885		RH	1	Hinge	Gångjärn	
0040	3	46 85 723			6	Screw	Skruv	
0050	4	40 87 045			6	Nut	Mutter	5
0060	5	44 93 912			4	Ballpin	Kultapp	5
0070	6	48 55 128			2	Gas spring	Gasfjäder	
0080								
0090	10	47 67 331			1	Catch	Hake	
0100	11	79 84 305			2	Hexagon screw	Sexkantsskruv	5
0110	12	48 54 923			2	Bonnet lock	Huvlås	
0120	13	48 54 972			2	Return spring	Returfjäder	
0130	14	47 68 636			1	Wear protection	Slitskydd	
0140	15	79 72 516			2	Rivet	Nit	5
0150	16	90 85 267			1	Buffer	Buffert	5
0160	17	45 52 204			1	Seal	Tätning	
0170	18	48 53 313			44	.Clip	.Clips	
0180	19	43 04 234			2	Rubber buffer	Gummibuffert	4
0190	21	79 82 747			2	Plug	Plugg	
0200	22	69 73 671			2	Guide	Styrning	5
0210	23	79 78 430			4	Screw	Skruv	
0220	24	48 54 980			2	Lock pin	Låstapp	
0230	25	69 73 762			2	Washer	Bricka	
0240	26	79 77 952			2	Hexagon nut	Sexkantsmutter	5
0250	27	48 55 250			1	Tube	Rör	
0260	28	69 73 804			2	Clip	Clips	5
0270	29	49 40 755			2	Set screw	Stoppskruv	5
0280		48 57 959			1	Nipple	Nippel	
0290								
0300	30	48 55 011		LHD	1	Hood lock wire	Huvlåswire	
0310	30	48 55 029		RHD	1	Hood lock wire	Huvlåswire	
0320	31	43 21 816		LHD	1	Grommet	Genomföring	4
0330	31	46 98 205		RHD	1	Grommet	Genomföring	
0340	32	43 21 808			1	Clamp	Klämma	5
0350	33	79 67 995			1	Clip nut	Clipsmutter	3
0360	34	79 85 948			1	Screw	Skruv	5
0370	35	92 66 552			5	Tube clamp	Rörklamma	5
0380								
0390	36	45 52 212		LHD	1	Seal	Tätning	
0400	36	46 98 874		RHD	1	Seal	Tätning	
0410	37	48 53 313			4	.Clip	.Clips	

MASTER INDEX

0	General	1-A02
2	Engine	1-C02
3A	Electrical systems, instruments	1-F02
4	Transmission	1-I02
5	Brakes	1-K02
6	Front assembly, Steering	1-L02
7	Suspension, Wheels	2-A02
8A	Body, external	2-B02
8B	Body, internal	2-F02
8C	Body, heating and ventilation	2-H02
8D	Tool, Labels	2-I02
9	Accessories	2-J02
10	Numerical register	3-A02

8A GROUP INDEX

Car body	2-B06
Hood, front, fenders	2-C02
Doors, trunk lid	2-C10
External details, glass, sealings	2-C24
Bumpers and touch-up paint	2-D14
Complete sets	2-E02

2 -C04 *Front member* *Grille*

Frontbalk *Grill*

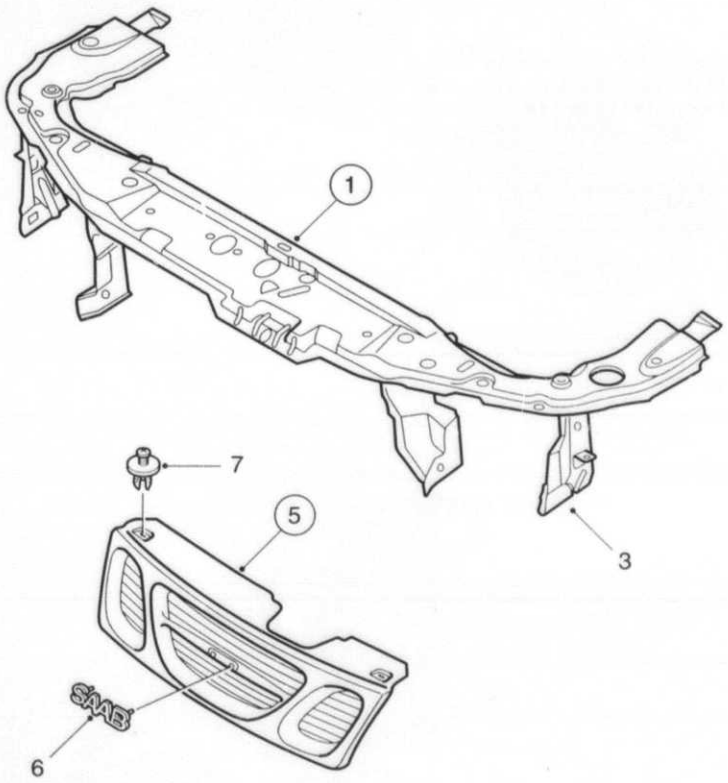

F8836 CAC97
08A/0600

	Pos	Part No/Art nr	K S	Notes/Anmärkningar	Qty/ Antal	Description	Benämning	S L
0600								
0010	1	48 26 095			1	Beam	Balk	
0040	3	48 26 137		LH	1	.End plate	.Gavel	
0050	3	48 26 145		RH	1	.End plate	.Gavel	
0060								
0070	5	46 77 191			1	Grille	Grill	
0080	6	48 30 071			1	.Emblem	.Emblem	
0090	7	40 63 897			2	Rivet	Nit	3

MASTER INDEX

0	General	1-A02
2	Engine	1-C02
3A	Electrical systems, instruments	1-F02
4	Transmission	1-I02
5	Brakes	1-K02
6	Front assembly, Steering	1-L02
7	Suspension, Wheels	2-A02
8A	Body, external	2-B02
8B	Body, internal	2-F02
8C	Body, heating and ventilation	2-H02
8D	Tool, Labels	2-I02
9	Accessories	2-J02
10	Numerical register	3-A02

8A GROUP INDEX

Car body	2-B06
Hood, front, fenders	2-C02
Doors, trunk lid	2-C10
External details, glass, sealings	2-C24
Bumpers and touch-up paint	2-D14
Complete sets	2-E02

2-C06 Front fender / Framskärm

0650	Pos	Part No/Art nr	K S	Notes/Anmärkningar	Qty/ Antal	Description	Benämning	S L
0010	1	48 26 012		LH	1	Front fender	Framskärm	
0020	1	48 26 020		RH	1	Front fender	Framskärm	
0021		43 45 138			2	Hexagon nut	Sexkantsmutter	5
0030								
0040	10			See page 8A-031, 2-C08		Wheel arch liner	Innerskärm	

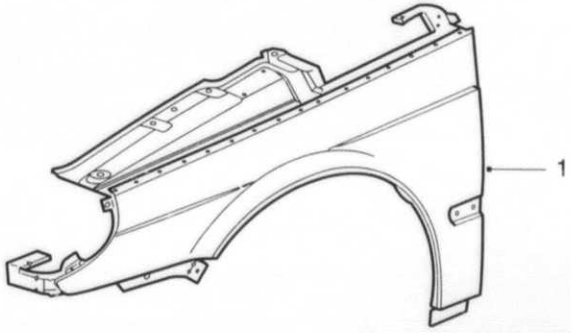

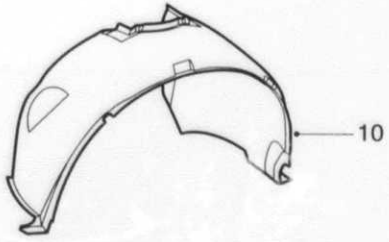

F8837 CAC97
08A/0650

MASTER INDEX

0	General	1-A02
2	Engine	1-C02
3A	Electrical systems, instruments	1-F02
4	Transmission	1-I02
5	Brakes	1-K02
6	Front assembly, Steering	1-L02
7	Suspension, Wheels	2-A02
8A	Body, external	2-B02
8B	Body, internal	2-F02
8C	Body, heating and ventilation	2-H02
8D	Tool, Labels	2-I02
9	Accessories	2-J02
10	Numerical register	3-A02

8A GROUP INDEX

Car body	2-B06
Hood, front, fenders	2-C02
Doors, trunk lid	2-C10
External details, glass, sealings	2-C24
Bumpers and touch-up paint	2-D14
Complete sets	2-E02

2-C08

Wheel arch liner

Innerskärm

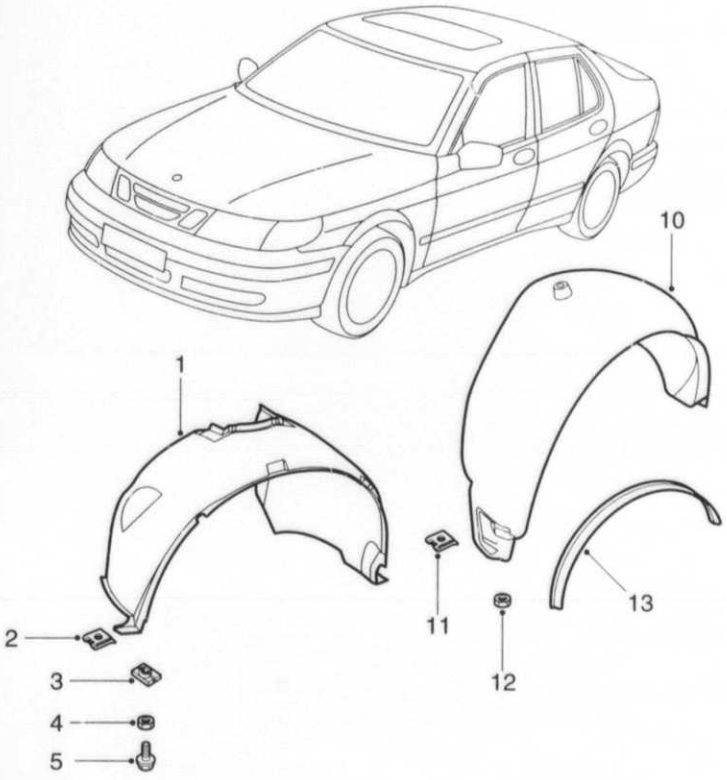

F8838 CAC97
08A/0700

0700	Pos	Part No/Art nr	K S	Notes/Anmärkningar	Qty/ Antal	Description	Benämning	S L
0010	1	45 92 937		LH	1	Wheel arch liner	Innerskärm	
0020	1	45 92 945		RH	1	Wheel arch liner	Innerskärm	
0030	2	73 99 181			2	.Clip	.Clips	5
0040								
0050	3	43 33 704			2	Expanding nut	Expandermutter	3
0060	4	40 87 128			4	Plastic nut	Plastmutter	5
0070	5	79 78 646			2	Screw	Skruv	5
0080		49 14 164			2	Clip nut	Klämmutter	
0090								
0100	10	45 92 952		LH	1	Wheel arch liner	Innerskärm	
0110	10	45 92 960		RH	1	Wheel arch liner	Innerskärm	
0120	11	49 10 949			1	.Clip nut	.Clipsmutter	
0130								
0140	12	40 87 128			8	Plastic nut	Plastmutter	5
0150	13	45 64 175		LH	1	Wheel house moulding	Hjulhusdekor	
0160	13	45 64 183		RH	1	Wheel house moulding	Hjulhusdekor	

MASTER INDEX

0	General	1-A02
2	Engine	1-C02
3A	Electrical systems, instruments	1-F02
4	Transmission	1-I02
5	Brakes	1-K02
6	Front assembly, Steering	1-L02
7	Suspension, Wheels	2-A02
8A	Body, external	2-B02
8B	Body, internal	2-F02
8C	Body, heating and ventilation	2-H02
8D	Tool, Labels	2-I02
9	Accessories	2-J02
10	Numerical register	3-A02

8A GROUP INDEX

Car body	2-B06
Hood, front, fenders	2-C02
Doors, trunk lid	2-C10
External details, glass, sealings	2-C24
Bumpers and touch-up paint	2-D14
Complete sets	2-E02

2-C10 Front doors, hinges, window regulators

Framdörrar, gångjärn, fönsterhissar

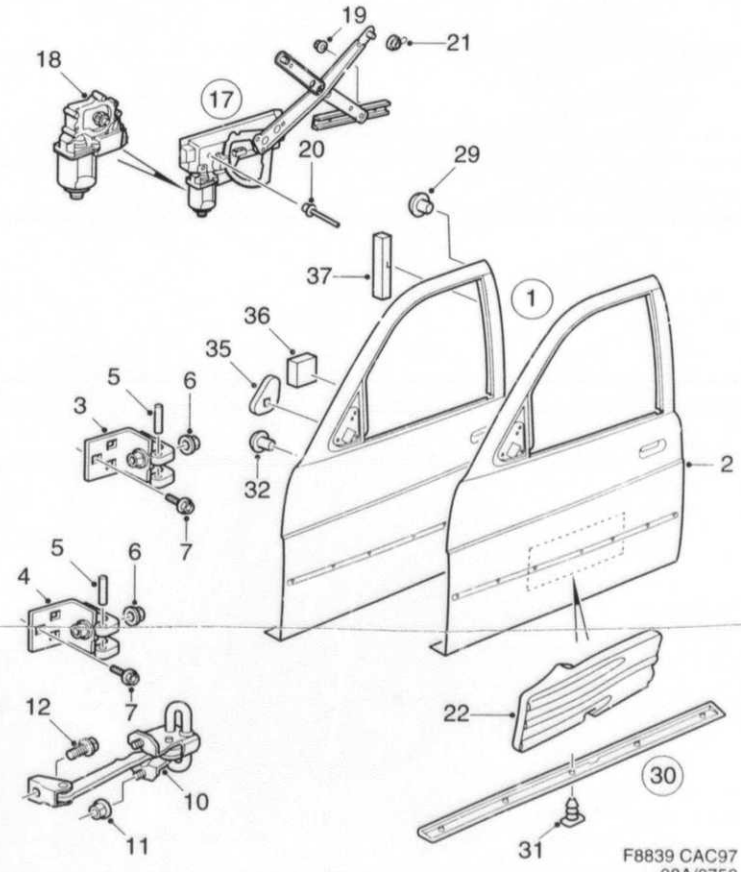

0750	Pos	Part No/Art nr	K S	Notes/Anmärkningar	Qty/ Antal	Description	Benämning	S L
0010	1	48 51 051		LH	1	Door	Dörr	
0020	1	48 51 069		RH	1	Door	Dörr	
0030	2	47 68 776		LH	1	.Outer panel	.Ytterplåt	
0040	2	47 68 784		RH	1	.Outer panel	.Ytterplåt	
0050	3	48 51 572			1	.Hinge	.Gångjärn	
0060	4	48 56 399			1	.Hinge	.Gångjärn	
0070	5	47 67 653			2	.Hinge pin	.Gångjärnspinne	
0080	6	43 47 993			2	.Flange lock nut	.Flänslåsmutter	
0090								
0100	7	49 40 045			12	Screw	Skruv	
0110								
0120	10	45 57 856			2	Restrainer	Dörrstopp	
0130	11	79 77 929			4	Nut	Mutter	5
0140	12	79 78 190			2	Screw	Skruv	5
0150								
0160	17	45 52 592		LH	1	Window lift	Fönsterhiss	
0170	17	45 52 600		RH	1	Window lift	Fönsterhiss	
0180	18	49 27 950		LH	1	.Motor	.Motor	
0190	18	49 27 968		RH	1	.Motor	.Motor	
0200	19	79 77 929			4	Nut	Mutter	5
0210	20	40 87 904			8	Blind rivet	Blindnit	5
0220	21	44 93 433			2	Roller	Rulle	
0230								
0240	22	46 98 379		LH	1	Spacer	Distans	
0250	22	46 98 387		RH	1	Spacer	Distans	
0260								
0270	29	69 30 572			4	Plug	Plugg	5
0280								
0290	30	48 33 133		LH	1	Protection	Skydd	
0300	30	48 33 141		RH	1	Protection	Skydd	
0310	31	49 18 041			6	.Clip	.Clips	
0320								
0330	32	82 72 635			2	Plug	Plugg	5
0340	35	47 68 842			2	Sound insulation	Ljudisolering	
0350	36	48 56 787			2	Sound insulation	Ljudisolering	
0360	37	48 56 795			2	Sound insulation	Ljudisolering	
0370		92 89 414		L=44DM	X	Tape	Tape	5

MASTER INDEX

0	General	1-A02
2	Engine	1-C02
3A	Electrical systems, instruments	1-F02
4	Transmission	1-I02
5	Brakes	1-K02
6	Front assembly, Steering	1-L02
7	Suspension, Wheels	2-A02
8A	Body, external	2-B02
8B	Body, internal	2-F02
8C	Body, heating and ventilation	2-H02
8D	Tool, Labels	2-I02
9	Accessories	2-J02
10	Numerical register	3-A02

8A GROUP INDEX

Car body	2-B06
Hood, front, fenders	2-C02
Doors, trunk lid	2-C10
External details, glass, sealings	2-C24
Bumpers and touch-up paint	2-D14
Complete sets	2-E02

2-C12 Rear doors, hinges, window regulators / Bakdörrar, gångjärn, fönsterhissar

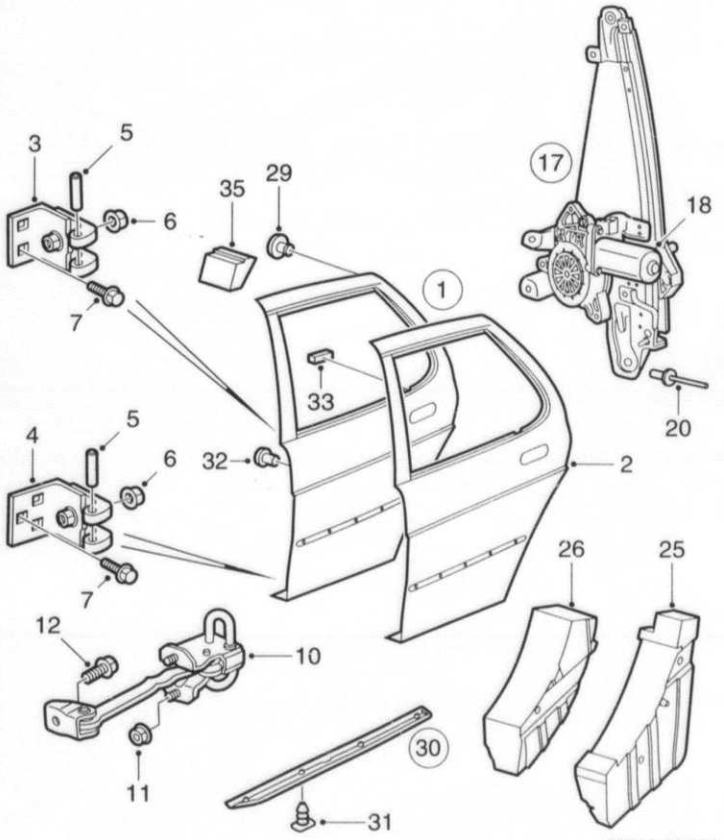

F8840 CAC97
08A/0760

0760	Pos	Part No/Art nr	K S	Notes/Anmärkningar	Qty/ Antal	Description	Benämning	S L
0010	1	48 51 077		LH	1	Door	Dörr	
0020	1	48 51 085		RH	1	Door	Dörr	
0030	2	47 68 792		LH	1	.Outer panel	.Ytterplåt	
0040	2	47 68 800		RH	1	.Outer panel	.Ytterplåt	
0050	3	48 51 598			1	.Hinge	.Gångjärn	
0060	4	48 51 580			1	.Hinge	.Gångjärn	
0070	5	47 67 653			2	.Hinge pin	.Gångjärnspinne	
0080	6	43 47 993			2	.Flange lock nut	.Flänslåsmutter	
0090								
0100	7	49 40 045			10	Screw	Skruv	
0110								
0120	10	45 57 856			2	Restrainer	Dörrstopp	
0130	11	79 77 929			4	Nut	Mutter	5
0140	12	79 78 190			2	Screw	Skruv	5
0150								
0160	17	46 95 672		LH	1	Window lift	Fönsterhiss	
0170	17	46 95 680		RH	1	Window lift	Fönsterhiss	
0180	18	46 95 748		LH	1	.Motor	.Motor	
0190	18	46 95 730		RH	1	.Motor	.Motor	
0200	20	40 87 904			10	Blind rivet	Blindnit	5
0210								
0220	25	47 67 356		LH	1	Spacer	Distans	
0230	25	47 67 364		RH	1	Spacer	Distans	
0240	26	47 67 059		LH	1	Spacer	Distans	
0250	26	47 67 067		RH	1	Spacer	Distans	
0260								
0270	29	69 30 572			4	Plug	Plugg	5
0280								
0290	30	48 33 117		LH	1	Protection	Skydd	
0300	30	48 33 125		RH	1	Protection	Skydd	
0310	31	49 18 041			4	.Clip	.Clips	
0320								
0330	32	82 72 635			2	Plug	Plugg	5
0340	33	48 55 656			2	Seal	Tätning	
0350	35	48 56 324			2	Sound insulation	Ljudisolering	
0360		92 89 414		L=44DM	X	Tape	Tape	5

MASTER INDEX

0	General	1-A02
2	Engine	1-C02
3A	Electrical systems, instruments	1-F02
4	Transmission	1-I02
5	Brakes	1-K02
6	Front assembly, Steering	1-L02
7	Suspension, Wheels	2-A02
8A	Body, external	2-B02
8B	Body, internal	2-F02
8C	Body, heating and ventilation	2-H02
8D	Tool, Labels	2-I02
9	Accessories	2-J02
10	Numerical register	3-A02

8A GROUP INDEX

Car body	2-B06
Hood, front, fenders	2-C02
Doors, trunk lid	2-C10
External details, glass, sealings	2-C24
Bumpers and touch-up paint	2-D14
Complete sets	2-E02

2-C14 Door lock / Dörrlås
Front door / Framdörr

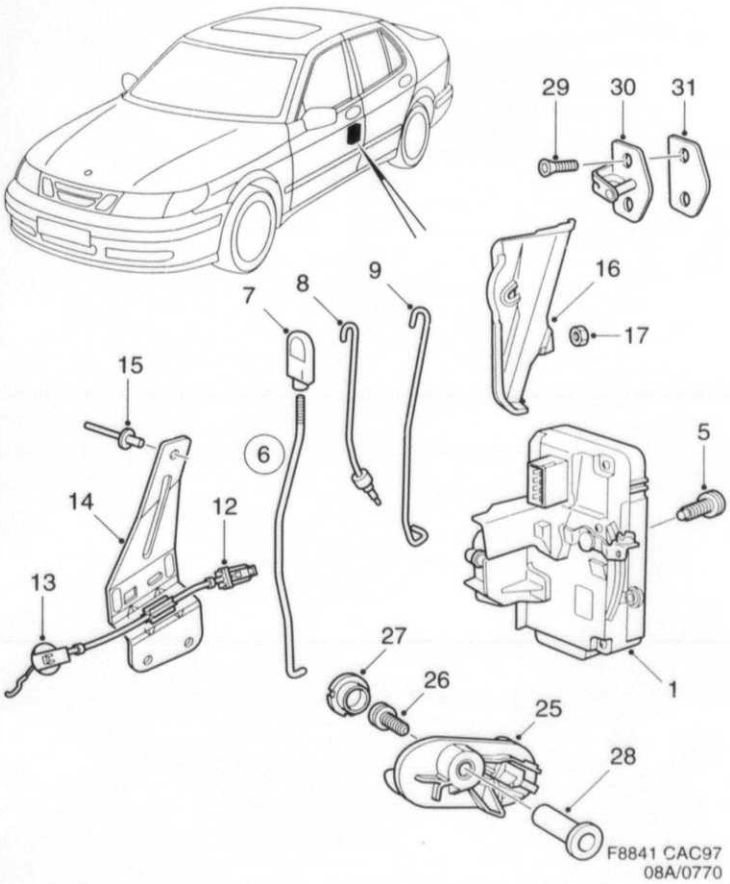

0770	Pos	Part No/Art nr	K S	Notes/Anmärkningar	Qty/ Antal	Description	Benämning	S L
0010	1	48 55 151		LH, LHD	1	Door lock	Dörrlås	
0020	1	48 55 185		RH, LHD	1	Door lock	Dörrlås	
0030	1	48 55 177		LH, RHD	1	Door lock	Dörrlås	
0040	1	48 55 169		RH, RHD	1	Door lock	Dörrlås	
0050	5	46 95 813			6	Screw	Skruv	
0060	6	45 52 576		LH	1	Rod	Stång	
0070	6	45 52 584		RH	1	Rod	Stång	
0080	7	40 37 735			1	,Lock button	,Låsknapp	5
0090	8	45 52 535		LH	1	Control rod	Manöverstång	
0100	8	45 52 543		RH	1	Control rod	Manöverstång	
0110	9	45 52 519		LH	1	Rod	Stång	
0120	9	45 52 527		RH	1	Rod	Stång	
0130	12	45 59 738			2	Cable	Wire	
0140	13	48 53 644			2	Coupling piece	Kopplingsstycke	
0150	14	46 95 292		LH	1	Bracket	Konsol	
0160	14	46 95 300		RH	1	Bracket	Konsol	
0170	15	79 72 516			6	Rivet	Nit	5
0180	16	48 53 115		LH, LHD	1	Guard	Skydd	
0190	16	48 53 123		RH RHD	1	Guard	Skydd	
0200	17	49 40 243			1	Hexagon nut	Sexkantsmutter	
0210								
0220	25	48 24 348		LH, CHROME	1	Opening handle	Öppningshandtag	
0230	25	48 24 355		RH, CHROME	1	Opening handle	Öppningshandtag	
0240	26	79 78 430			2	Screw	Skruv	
0250	27	44 20 600			2	Cover	Täcklock	
0260	28	73 99 454			2	Nut	Mutter	5
0270								
0280	29	46 85 624			4	Screw	Skruv	
0290	30	46 95 821			2	End plate	Slutbleck	
0300	31	48 54 378			2	Spacer	Mellanlägg	

MASTER INDEX

0	General	1-A02
2	Engine	1-C02
3A	Electrical systems, instruments	1-F02
4	Transmission	1-I02
5	Brakes	1-K02
6	Front assembly, Steering	1-L02
7	Suspension, Wheels	2-A02
8A	Body, external	2-B02
8B	Body, internal	2-F02
8C	Body, heating and ventilation	2-H02
8D	Tool, Labels	2-I02
9	Accessories	2-J02
10	Numerical register	3-A02

8A GROUP INDEX

Car body	2-B06
Hood, front, fenders	2-C02
Doors, trunk lid	2-C10
External details, glass, sealings	2-C24
Bumpers and touch-up paint	2-D14
Complete sets	2-E02

2-C16 Door lock Rear door / Dörrlås Bakdörr

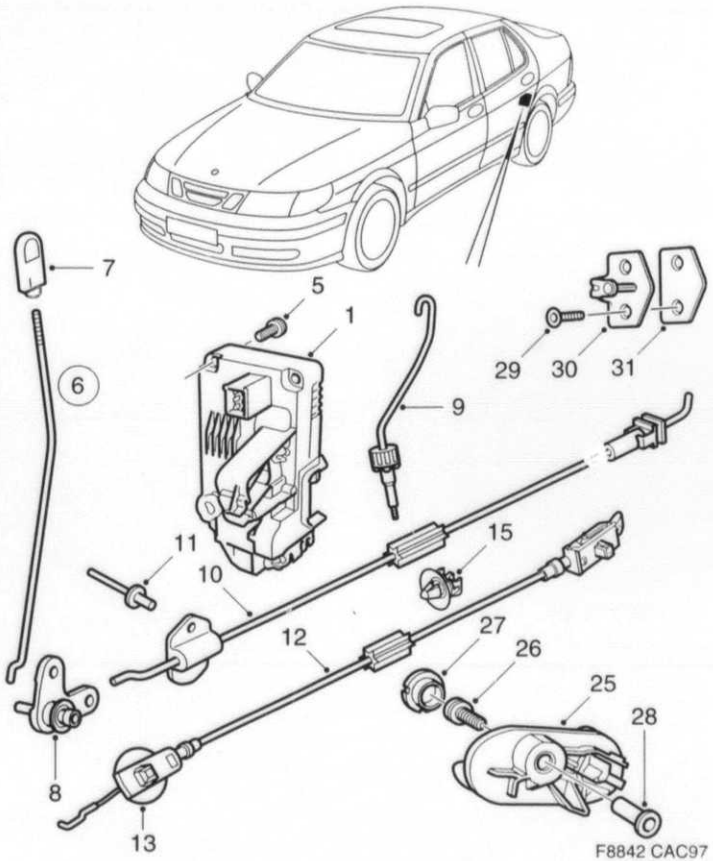

F8842 CAC97
08A/0780

0780	Pos	Part No/Art nr	K S	Notes/Anmärkningar	Qty/ Antal	Description	Benämning	S L
0010	1	48 55 193		LH	1	Door lock	Dörrlås	
0020	1	48 55 201		RH	1	Door lock	Dörrlås	
0030	5	46 95 813			6	Screw	Skruv	
0040	6	45 52 774		LH	1	Rod	Stång	
0050	6	45 52 782		RH	1	Rod	Stång	
0060	7	40 37 735			1	.Lock button	.Låsknapp	5
0070	8	43 23 119			2	Lever	Hävarm	5
0080	9	45 52 733		LH	1	Rod	Stång	
0090	9	45 52 741		RH	1	Rod	Stång	
0100	10	48 53 479			2	Cable	Wire	
0110	11	79 72 516			2	Rivet	Nit	5
0120	12	45 59 746			2	Cable	Wire	
0130	13	48 56 449			2	Coupling piece	Kopplingsstycke	
0140	15	48 54 451			2	Clip	Clips	
0150	25	48 21 807		LH, CHROME	1	Opening handle	Öppningshandtag	
0160	25	48 21 815		RH, CHROME	1	Opening handle	Öppningshandtag	
0170	26	79 78 430			2	Screw	Skruv	
0180	27	44 20 600			2	Cover	Täcklock	
0190	28	73 99 454			2	Nut	Mutter	5
0200								
0210	29	46 85 624			4	Screw	Skruv	
0220	30	46 95 821			2	End plate	Slutbleck	
0230	31	48 54 378			2	Spacer	Mellanlägg	

MASTER INDEX

0	General	1-A02
2	Engine	1-C02
3A	Electrical systems, instruments	1-F02
4	Transmission	1-I02
5	Brakes	1-K02
6	Front assembly, Steering	1-L02
7	Suspension, Wheels	2-A02
8A	Body, external	2-B02
8B	Body, internal	2-F02
8C	Body, heating and ventilation	2-H02
8D	Tool, Labels	2-I02
9	Accessories	2-J02
10	Numerical register	3-A02

8A GROUP INDEX

Car body	2-B06
Hood, front, fenders	2-C02
Doors, trunk lid	2-C10
External details, glass, sealings	2-C24
Bumpers and touch-up paint	2-D14
Complete sets	2-E02

2-C18

Trunk lid, hinges, lock

Baklucka, gångjärn, lås

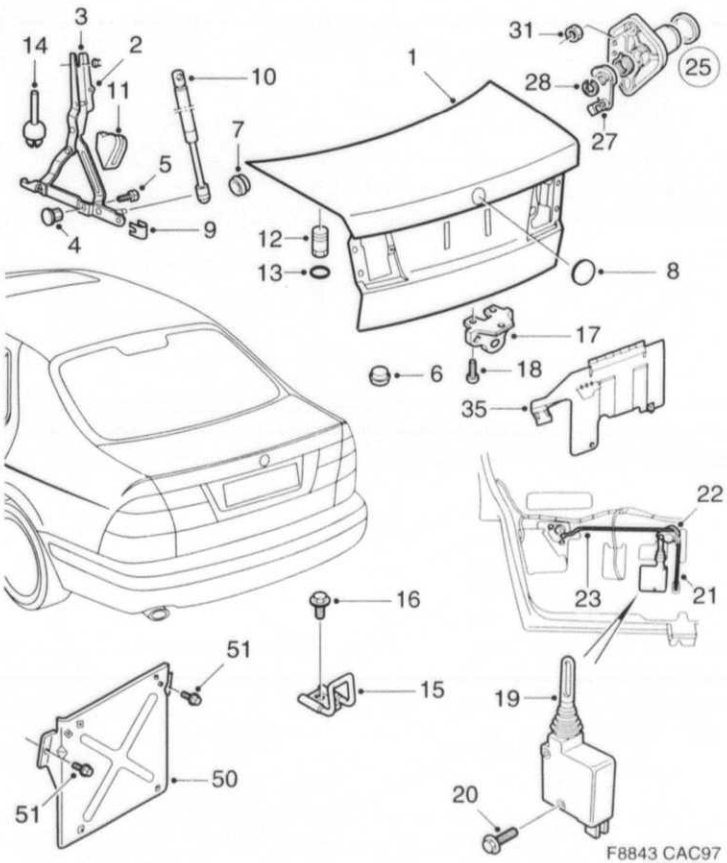

F8843 CAC97
08A/0800

0800	Pos	Part No/Art nr	K S	Notes/Anmärkningar	Qty/ Antal	Description	Benämning	S L
0010	1	48 51 044			1	Trunk lid	Bagagelucka	
0020	2	48 51 713		LH	1	Hinge	Gångjärn	
0030	2	48 51 721		RH	1	Hinge	Gångjärn	
0040	3	79 77 630			4	Nut	Mutter	5
0050	4	73 99 454			6	Nut	Mutter	5
0060	5	79 78 190			6	Screw	Skruv	5
0070	6	69 30 572			2	Plug	Plugg	5
0080	7	71 63 074			2	Plug	Plugg	5
0090	8	73 98 886			1	Plug	Plugg	5
0100	9	45 58 060			2	Clip	Clips	5
0110	10	48 55 094			2	Gas spring	Gasfjäder	
0120	11	45 58 045		LH	1	Stop	Anslag	
0130	11	45 58 052		RH	1	Stop	Anslag	
0140	12	48 51 374			2	Rubber buffer	Gummibuffert	
0150	13	69 74 000			2	Protecting moulding	Skyddslist	5
0160	14	48 55 243			2	Stop	Stopp	
0170								
0180	15	48 55 664			1	End plate	Slutbleck	
0190	16	43 47 407			1	Screw	Skruv	
0200	17	47 66 879			1	Lock	Lås	
0210	18	79 82 325			3	Screw	Skruv	5
0220								
0230	19	48 08 812			1	Motor	Motor	
0240	20	79 71 823			3	Screw	Skruv	5
0250	21	46 95 243			1	Rod	Stång	
0260	22	48 51 929			1	Pivot arm	Ledarm	
0270	23	45 52 329			1	Rod	Stång	
0280								
0290	25			See page 8A-045, 2-C22		Lock cylinder	Låscylinder	
0291	27	43 46 110			1	.Clip	.Clips	6
0292	28	48 54 212			1	.E-circlip	.Spårryttare	
0300	31	79 77 929			2	Nut	Mutter	5
0310	35	48 51 366			1	Protection	Skydd	
0320								
0330	50	45 60 678		US, CA, JP	1	Bracket	Hållare	
0340	51	79 78 091		US, CA, JP	2	Screw	Skruv	5
0350		92 40 086		US, CA, JP	1	Mounting kit	Monteringssats	5

MASTER INDEX

0	General	1-A02
2	Engine	1-C02
3A	Electrical systems, instruments	1-F02
4	Transmission	1-I02
5	Brakes	1-K02
6	Front assembly, Steering	1-L02
7	Suspension, Wheels	2-A02
8A	Body, external	2-B02
8B	Body, internal	2-F02
8C	Body, heating and ventilation	2-H02
8D	Tool, Labels	2-I02
9	Accessories	2-J02
10	Numerical register	3-A02

8A GROUP INDEX

Car body	2-B06
Hood, front, fenders	2-C02
Doors, trunk lid	2-C10
External details, glass, sealings	2-C24
Bumpers and touch-up paint	2-D14
Complete sets	2-E02

2-C20 Outside handle / Ytterhandtag

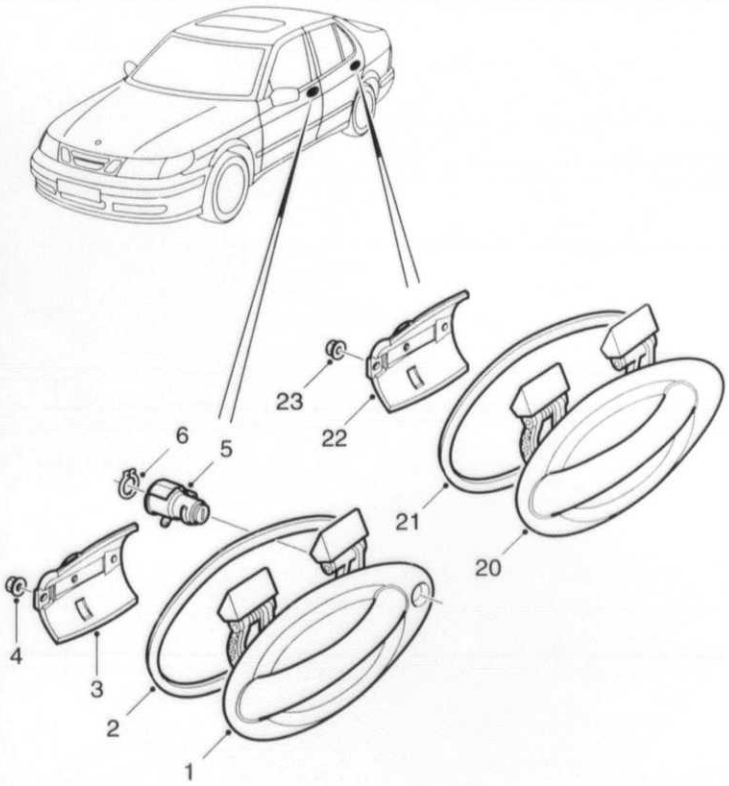

F8844 CAC97
08A/0850

0850	Pos	Part No/Art nr	K S	Notes/Anmärkningar	Qty/ Antal	Description	Benämning	S L
0010	1	48 50 871		LH, LHD	1	Handle	Handtag	
0020	1	45 53 285		RH, LHD	1	Handle	Handtag	
0030	1	45 53 277		LH, RHD	1	Handle	Handtag	
0040	1	48 50 889		RH, RHD	1	Handle	Handtag	
0050	2	48 54 196		LH	1	Seal	Tätning	
0060	2	48 54 204		RH	1	Seal	Tätning	
0070	3	45 53 939			2	Bracket	Konsol	
0080	4	79 77 929			3	Nut	Mutter	5
0090								
0100	5			See page 8A-045, 2-C22	1	Lock cylinder	Låscylinder	
0110	6	48 54 212			1	E-circlip	Spårryttare	
0120								
0130	20	45 53 277		LH	1	Handle	Handtag	
0140	20	45 53 285		RH	1	Handle	Handtag	
0150	21	48 54 196		LH	1	Seal	Tätning	
0160	21	48 54 204		RH	1	Seal	Tätning	
0170	22	45 53 939			2	Bracket	Konsol	
0180	23	79 77 929			4	Nut	Mutter	5

MASTER INDEX

0	General	1-A02
2	Engine	1-C02
3A	Electrical systems, instruments	1-F02
4	Transmission	1-I02
5	Brakes	1-K02
6	Front assembly, Steering	1-L02
7	Suspension, Wheels	2-A02
8A	Body, external	2-B02
8B	Body, internal	2-F02
8C	Body, heating and ventilation	2-H02
8D	Tool, Labels	2-I02
9	Accessories	2-J02
10	Numerical register	3-A02

8A GROUP INDEX

Car body	2-B06
Hood, front, fenders	2-C02
Doors, trunk lid	2-C10
External details, glass, sealings	2-C24
Bumpers and touch-up paint	2-D14
Complete sets	2-E02

2 -C22 Lock / Lock cylinder set — Lås / Låscylindersats

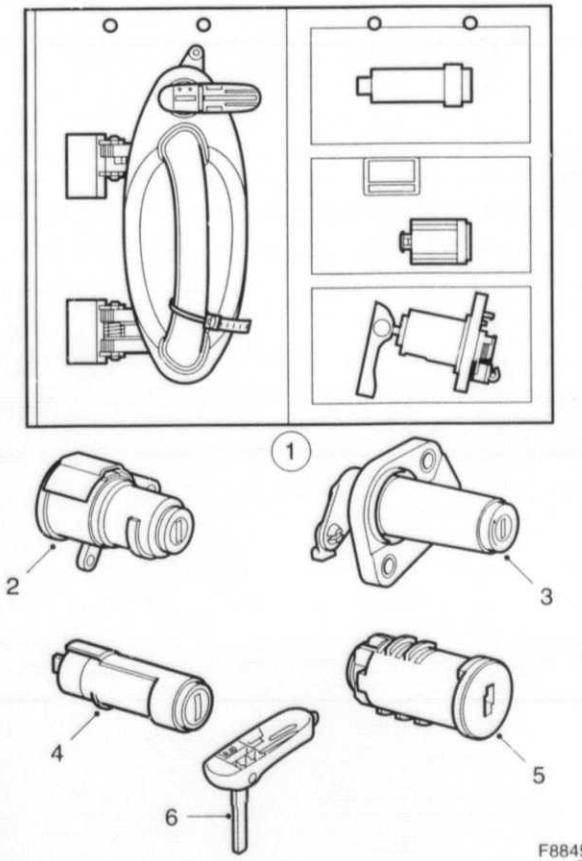

F8845 CAC97
08A/0900

	Pos	Part No/Art nr	K S	Notes/Anmärkningar	Qty/ Antal	Description	Benämning	S L
0900								
0010	1	45 53 293		LHD, DOOR LH, IGNITION, TRUNK DOOR AND GLOVE COMPARTMENT	1	Lock kit	Låssats	
0020								
0030								
0040								
0050	1	45 53 301		RHD, DOOR RH, IGNITION, TRUNK DOOR AND GLOVE COMPARTMENT	1	Lock kit	Låssats	
0060								
0070								
0080								
0090								
0100								
0110				41)		LOCK	LÅS	
0120								
0130	2	48 54 139		LHD, DOOR, STATE KEY CODE	X	Lock cylinder	Låscylinder	
0140								
0150	2	48 54 147		RHD, DOOR, STATE KEY CODE	X	Lock cylinder	Låscylinder	
0160								
0170	3	45 52 303		TRUNKDOOR, STATE KEY CODE	X	Lock cylinder	Låscylinder	
0180								
0190	4	89 60 221		IGNITION, STATE KEY CODE	X	Lock cylinder	Låscylinder	5
0200	5	47 66 739		GLOVE COMPARTMENT, STATE KEY CODE	X	Lock cylinder	Låscylinder	
0210								
0220								
0230	6	47 67 802		STATE KEY CODE	X	Key	Nyckel	
0240		48 55 334			X	Key blank	Nyckel ämne	
0250								

41. Lock cylinders may be ordered to match original equipment locks. Use the part number listed, stating the key code as additional information. These cylinders are delivered without keys. För att behålla samma nyckel till bilens samtliga lås kan låsdetaljer tillverkas efter uppgivande av nyckelnummer. Levereras utan nycklar.

MASTER INDEX

0	General	1-A02
2	Engine	1-C02
3A	Electrical systems, instruments	1-F02
4	Transmission	1-I02
5	Brakes	1-K02
6	Front assembly, Steering	1-L02
7	Suspension, Wheels	2-A02
8A	Body, external	2-B02
8B	Body, internal	2-F02
8C	Body, heating and ventilation	2-H02
8D	Tool, Labels	2-I02
9	Accessories	2-J02
10	Numerical register	3-A02

8A GROUP INDEX

Car body	2-B06
Hood, front, fenders	2-C02
Doors, trunk lid	2-C10
External details, glass, sealings	2-C24
Bumpers and touch-up paint	2-D14
Complete sets	2-E02

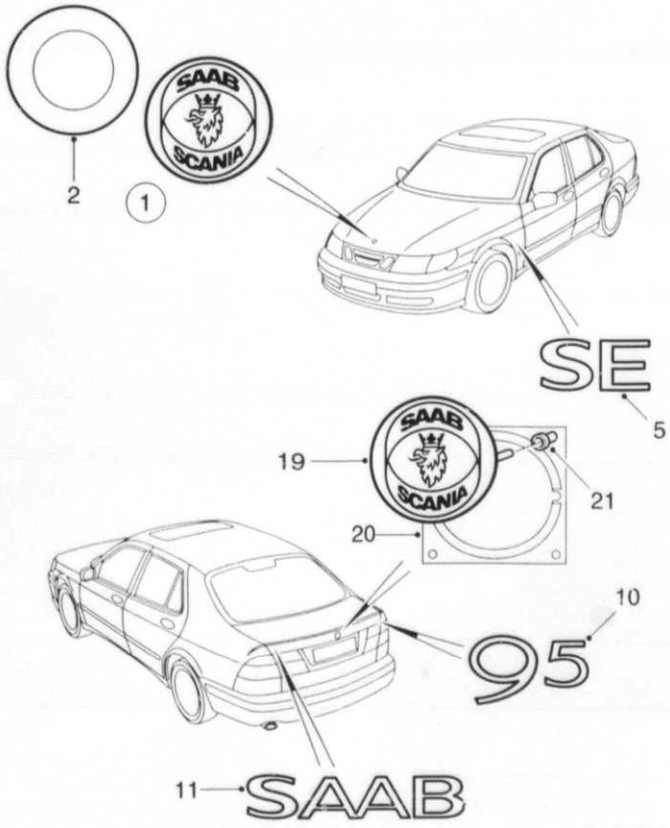

F8846 CAC97
08A/0925

2-C24

External details, glass, sealings
Emblem

Utvändiga detaljer, glas, tätningslister
Emblem

0925	Pos	Part No/Art nr	K S	Notes/Anmärkningar	Qty/ Antal	Description	Benämning	S L
0010	1	49 11 541		"SAAB-SCANIA"	1	Emblem	Emblem	
0020	2	49 14 115			1	.Decal tape	.Emblemtejp	
0030								
0040	5	49 56 322		"SE"	1	Emblem	Emblem	
0050	10	48 33 372		"9-5"	1	Emblem	Emblem	
0060	11	49 15 377		"SAAB"	1	Emblem	Emblem	
0070								
0080	19	48 33 638		"SAAB-SCANIA"	1	Emblem	Emblem	
0090	20	49 14 016			1	.Decal tape	.Emblemtejp	
0100	21	69 15 706			2	Bushing	Bussning	3

MASTER INDEX

0	General	1-A02
2	Engine	1-C02
3A	Electrical systems, instruments	1-F02
4	Transmission	1-I02
5	Brakes	1-K02
6	Front assembly, Steering	1-L02
7	Suspension, Wheels	2-A02
8A	Body, external	2-B02
8B	Body, internal	2-F02
8C	Body, heating and ventilation	2-H02
8D	Tool, Labels	2-I02
9	Accessories	2-J02
10	Numerical register	3-A02

8A GROUP INDEX

Car body	2-B06
Hood, front, fenders	2-C02
Doors, trunk lid	2-C10
External details, glass, sealings	2-C24
Bumpers and touch-up paint	2-D14
Complete sets	2-E02

2 -D02

External details, glass, sealings
Decor

Utvändiga detaljer, glas, tatningslister
Dekor

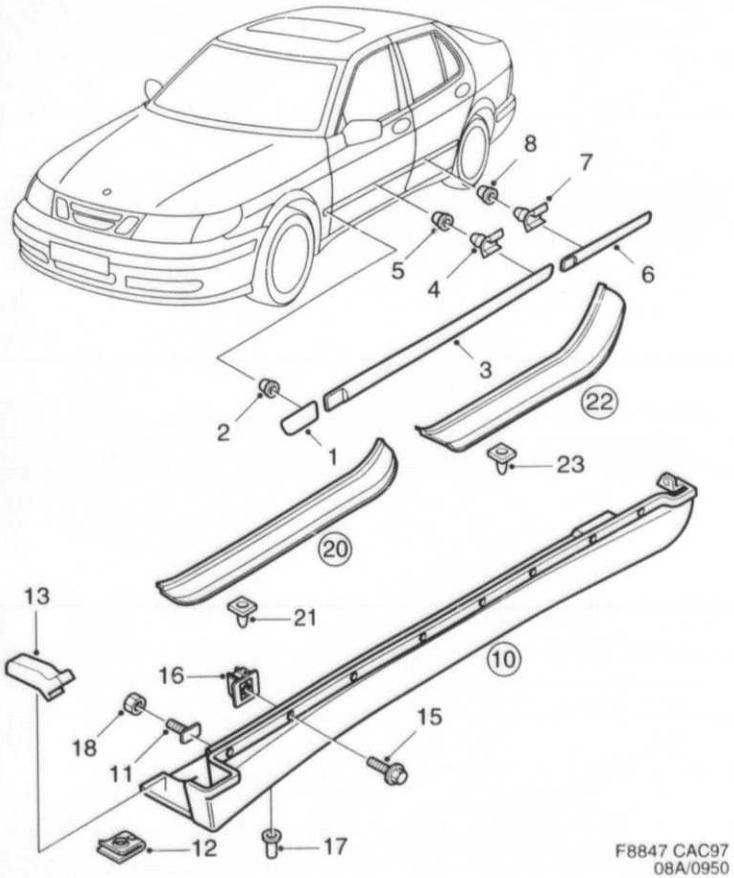

F8847 CAC97
08A/0950

0950	Pos	Part No/Art nr	K S	Notes/Anmärkningar	Qty/ Antal	Description	Benämning	S L
0010	1	45 60 215		LH	1	Decor strip	Dekorlist	
0020	1	45 60 223		RH	1	Decor strip	Dekorlist	
0030	2	44 69 854			2	.Bushing	.Bussning	5
0040								
0050	3	45 60 231		LH	1	Decor strip	Dekorlist	
0060	3	45 60 249		RH	1	Decor strip	Dekorlist	
0070	4	45 61 288			6	.Clip	.Clips	
0080	5	45 64 035			6	.Bushing	.Bussning	
0090								
0100	6	45 60 256		LH	1	Decor strip	Dekorlist	
0110	6	45 60 264		RH	1	Decor strip	Dekorlist	
0120	7	45 61 288			6	.Clip	.Clips	
0130	8	45 64 035			6	.Bushing	.Bussning	
0140								
0150	10	45 60 298		LH	1	Sill protection	Tröskelskydd	5
0160	10	45 60 306		RH	1	Sill protection	Tröskelskydd	5
0170	11	45 96 979			1	.Screw	.Skruv	
0180	12	79 77 523			1	.Clip	.Clips	5
0190	13	44 94 993			1	.Seal	.Tätning	5
0200								
0210	15	79 83 000			16	Hexagon screw	Sexkantsskruv	5
0220	16	45 62 161			16	Bushing	Bussning	
0230	17	40 87 128			10	Plastic nut	Plastmutter	5
0240	18	79 77 929			2	Nut	Mutter	5
0250								
0260	20	45 62 898		LH	1	Sill protection	Tröskelskydd	
0270	20	45 62 906		RH	1	Sill protection	Tröskelskydd	
0280	21	45 63 029			4	.Clip	.Fästclips	
0290								
0300	22	45 62 914		LH	1	Sill protection	Tröskelskydd	
0310	22	45 62 922		RH	1	Sill protection	Tröskelskydd	
0320	23	45 63 029			2	.Clip	.Fästclips	

MASTER INDEX

0	General	1-A02
2	Engine	1-C02
3A	Electrical systems, instruments	1-F02
4	Transmission	1-I02
5	Brakes	1-K02
6	Front assembly, Steering	1-L02
7	Suspension, Wheels	2-A02
8A	Body, external	2-B02
8B	Body, internal	2-F02
8C	Body, heating and ventilation	2-H02
8D	Tool, Labels	2-I02
9	Accessories	2-J02
10	Numerical register	3-A02

8A GROUP INDEX

Car body	2-B06
Hood, front, fenders	2-C02
Doors, trunk lid	2-C10
External details, glass, sealings	2-C24
Bumpers and touch-up paint	2-D14
Complete sets	2-E02

2 -D04 External mirror / Utvändiga backspeglar

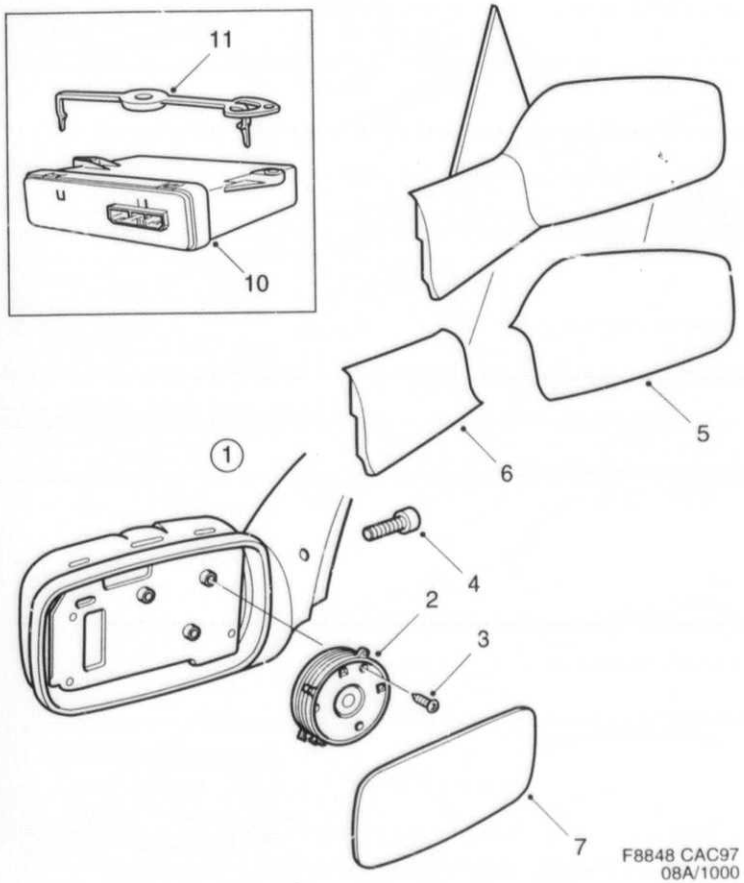

1000	Pos	Part No/Art nr	K S	Notes/Anmärkningar	Qty/ Antal	Description	Benämning	S L
0010	1	47 02 783		LH	1	Rear view mirror	Backspegel	3
0020				LHD, EU, ME, LA, PA,				
0030				US, CA				
0040				RHD, AU, GB, EU, PA				
0050								
0060	1	47 02 791		RH	1	Rear view mirror	Backspegel	3
0070				LHD, EU, ME, LA, PA,				
0080				US, CA				
0090				RHD, AU, GB, EU, PA				
0100								
0110	1	47 02 809		29) LH	1	Rear view mirror	Backspegel	3
0120				LHD, EU, ME, LA, PA,				
0130				US, CA				
0140				RHD, AU, GB, EU, PA				
0150								
0160	1	47 02 817		29) RH	1	Rear view mirror	Backspegel	3
0170				LHD, EU, ME, LA, PA				
0180				US, CA				
0190				RHD, AU, GB, EU, PA				
0200								
0210	2	45 08 081			1	.Drive unit	.Drivenhet	5
0220	2	46 07 628		29)	1	.Drive unit	.Drivenhet	5
0230	3	46 44 100			3	.Screw	.Skruv	5
0240								
0250	4	79 78 422			8	Screw	Skruv	5
0260								
0270	5	47 02 742		109) LH	1	Cover	Kåpa	
0280	5	47 02 759		109) RH	1	Cover	Kåpa	
0290								
0300	6	47 02 767		109) LH	1	Cover	Kåpa	
0310	6	47 02 775		109) RH	1	Cover	Kåpa	
0320								
0330	7	46 43 706		LH, LHD, WIDE ANGEL	1	Mirror glass	Spegelglas	3
0340				EU, LA, PA				
0350	7	48 81 785		LH, LHD, WIDE ANGEL	1	Mirror glass	Spegelglas	
0360				ME				
0370	7	46 43 748		LH, LHD, WIDE ANGEL	1	Mirror glass	Spegelglas	
0380				US, CA				
0390	7	46 43 706		LH, RHD, WIDE ANGEL	1	Mirror glass	Spegelglas	3
0400				AU, GB, EU, PA				
0410								
0420	7	46 43 714		RH, LHD, WIDE ANGEL	1	Mirror glass	Spegelglas	3
0430				EU, LA, PA				
0440	7	48 81 793		RH, LHD, WIDE ANGEL	1	Mirror glass	Spegelglas	
0450				ME				
0460	7	49 31 275		RH, LHD, WIDE ANGEL	1	Mirror glass	Spegelglas	
0470				US, CA				
0480	7	46 43 714		RH, RHD, WIDE ANGEL	1	Mirror glass	Spegelglas	3
0490				GB, EU, PA				
0500								
0510	7	46 43 755		RH, RHD, FLAT	1	Mirror glass	Spegelglas	3
0520				AU				
0530								
0540	10	46 83 884			1	Electronic unit	Elektronikenhet	
0550	11	46 83 876			1	Attaching brace	Fästbygel	
0560		92 89 414		L=44DM	X	Tape	Tape	5

29. With memory function. Med minnesfunktion.
109. Paintable design Lackeringsbart utförande

MASTER INDEX

0	General	1-A02
2	Engine	1-C02
3A	Electrical systems, instruments	1-F02
4	Transmission	1-I02
5	Brakes	1-K02
6	Front assembly, Steering	1-L02
7	Suspension, Wheels	2-A02
8A	Body, external	2-B02
8B	Body, internal	2-F02
8C	Body, heating and ventilation	2-H02
8D	Tool, Labels	2-I02
9	Accessories	2-J02
10	Numerical register	3-A02

8A GROUP INDEX

Car body	2-B06
Hood, front, fenders	2-C02
Doors, trunk lid	2-C10
External details, glass, sealings	2-C24
Bumpers and touch-up paint	2-D14
Complete sets	2-E02

2-D06 External details, glass, sealings *Windscreen*

Utvändiga detaljer, glas, tätningslister *Vindruta*

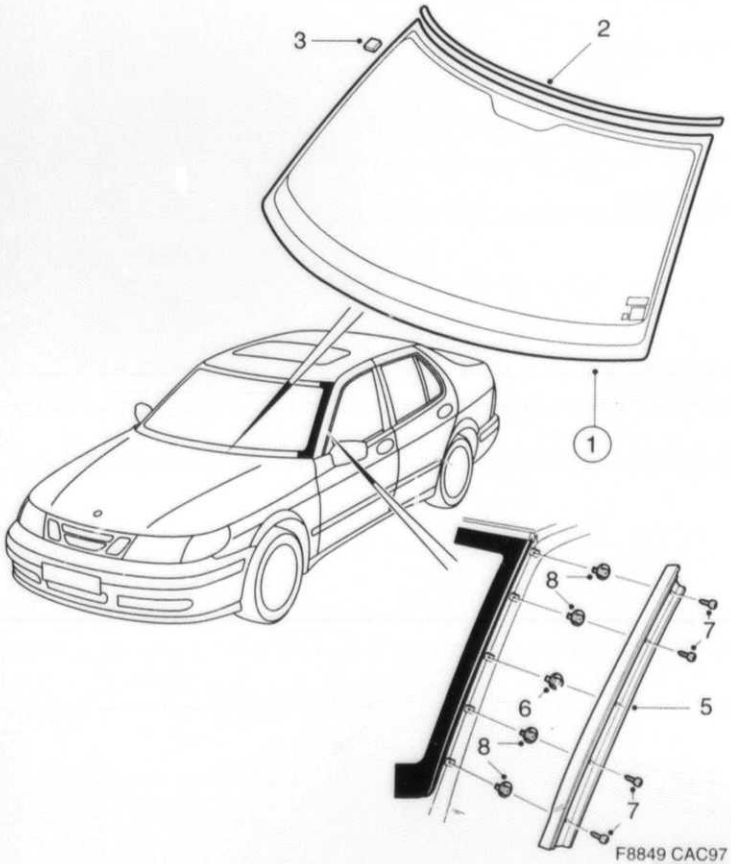

F8849 CAC97
08A/1050

1050	Pos	Part No/Art nr	K S	Notes/Anmärkningar	Qty/ Antal	Description	Benämning	S L
0010	1	48 57 223		23)	1	Windscreen	Vindruta	
0020				See page 8A-073, 2-E02				
0030	2	45 52 360			1	.Decor	.Dekor	
0040	3	69 92 028			3	Spacer	Distans	3
0050	5	45 52 378		LH	1	Decor	Dekor	
0060	5	45 52 386		RH	1	Decor	Dekor	
0070	6	46 98 106			2	Holder	Hållare	
0080	7	49 40 557			8	Screw	Skruv	
0090	8	46 98 098			8	Press nut	Pressmutter	

23. Heat-absorbing glass Värmeabsorberande glas

MASTER INDEX

0	General	1-A02
2	Engine	1-C02
3A	Electrical systems, instruments	1-F02
4	Transmission	1-I02
5	Brakes	1-K02
6	Front assembly, Steering	1-L02
7	Suspension, Wheels	2-A02
8A	Body, external	2-B02
8B	Body, internal	2-F02
8C	Body, heating and ventilation	2-H02
8D	Tool, Labels	2-I02
9	Accessories	2-J02
10	Numerical register	3-A02

8A GROUP INDEX

Car body	2-B06
Hood, front, fenders	2-C02
Doors, trunk lid	2-C10
External details, glass, sealings	2-C24
Bumpers and touch-up paint	2-D14
Complete sets	2-E02

2-D08

External details, glass, sealings

Rear window

Utvändiga detaljer, glas, tätningslister

Bakruta

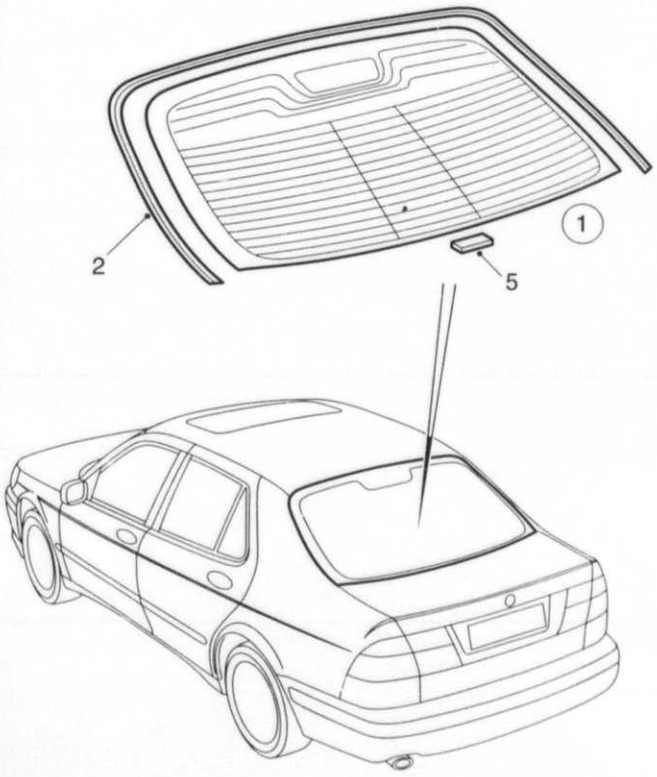

F8850 CAC97
08A/1060

1060	Pos	Part No/Art nr	K §	Notes/Anmärkningar	Qty/ Antal	Description	Benämning	S L
0010	1	47 67 117		23)	1	Rear window	Bakruta	
0020	2	45 52 402			1	.Decor strip	.Dekorlist	
0030	3	47 68 552			2	.Cover washer	.Täckbricka	
0040	5	69 92 028			1	Spacer	Distans	3

23. Heat-absorbing glass Värmeabsorberande glas

MASTER INDEX

0	General	1-A02
2	Engine	1-C02
3A	Electrical systems, instruments	1-F02
4	Transmission	1-I02
5	Brakes	1-K02
6	Front assembly, Steering	1-L02
7	Suspension, Wheels	2-A02
8A	Body, external	2-B02
8B	Body, internal	2-F02
8C	Body, heating and ventilation	2-H02
8D	Tool, Labels	2-I02
9	Accessories	2-J02
10	Numerical register	3-A02

8A GROUP INDEX

Car body	2-B06
Hood, front, fenders	2-C02
Doors, trunk lid	2-C10
External details, glass, sealings	2-C24
Bumpers and touch-up paint	2-D14
Complete sets	2-E02

2-D10

External details, glass, sealings
Doors and side windows

Utvändiga detaljer, glas, tätningslister
Dörr- och sidorutor

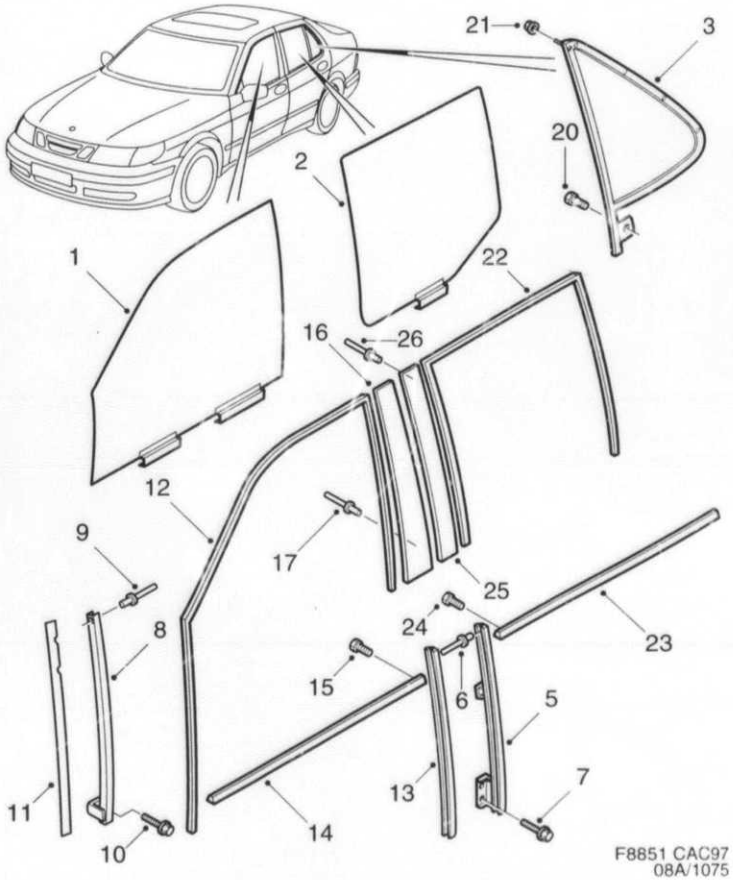

1075	Pos	Part No/Art nr	K S	Notes/Anmärkningar	Qty/ Antal	Description	Benämning	S L
0010	1	47 67 570		LH	1	Door window	Dörruta	4
0020	1	47 67 588		RH	1	Door window	Dörruta	
0030								
0040	2	45 52 816		LH	1	Door window	Dörruta	
0050	2	45 52 824		RH	1	Door window	Dörruta	
0060								
0070	3	45 52 410		LH	1	Door window	Dörruta	
0080	3	45 52 428		RH	1	Door window	Dörruta	
0090								
0100	5	45 52 659		LH	1	Guide rail	Styrskena	
0110	5	45 52 667		RH	1	Guide rail	Styrskena	
0120	6	79 72 516			2	Rivet	Nit	5
0130	7	79 79 610			4	Screw	Skruv	5
0140	8	45 52 972		LH	1	Guide rail	Styrskena	
0150	8	45 52 980		RH	1	Guide rail	Styrskena	
0160	9	79 72 516			4	Rivet	Nit	5
0170	10	79 79 610			2	Screw	Skruv	5
0180	11	48 52 398			2	Protection	Skydd	
0190	12	45 51 891		LH	1	Seal	Tätning	
0200	12	45 51 909		RH	1	Seal	Tätning	
0210	13	48 53 818			2	Seal	Tätning	
0220	14	45 51 917		LH	1	Seal	Tätning	
0230	14	45 51 925		RH	1	Seal	Tätning	
0240	15	49 40 250			2	Screw	Skruv	
J250	16	45 51 933		LH	1	Cover	Avtäckning	
0260	16	45 51 941		RH	1	Cover	Avtäckning	
0270	17	46 85 632			6	Blind rivet	Blindnit	
0280								
0290	20	79 79 610			2	Screw	Skruv	5
0300	21	79 77 929			8	Nut	Mutter	5
0310								
0320	22	45 51 990		LH	1	Seal	Tätning	
0330	22	45 52 006		RH	1	Seal	Tätning	
0340	23	45 52 014		LH	1	Seal	Tätning	
0350	23	45 52 022		RH	1	Seal	Tätning	
0360	24	49 40 250			2	Screw	Skruv	
0370	25	45 52 030		LH	1	Cover	Avtäckning	
0380	25	45 52 048		RH	1	Cover	Avtäckning	
0390	26	46 85 632			6	Blind rivet	Blindnit	

MASTER INDEX

0	General	1-A02
2	Engine	1-C02
3A	Electrical systems, instruments	1-F02
4	Transmission	1-I02
5	Brakes	1-K02
6	Front assembly, Steering	1-L02
7	Suspension, Wheels	2-A02
8A	Body, external	2-B02
8B	Body, internal	2-F02
8C	Body, heating and ventilation	2-H02
8D	Tool, Labels	2-I02
9	Accessories	2-J02
10	Numerical register	3-A02

8A GROUP INDEX

Car body	2-B06
Hood, front, fenders	2-C02
Doors, trunk lid	2-C10
External details, glass, sealings	2-C24
Bumpers and touch-up paint	2-D14
Complete sets	2-E02

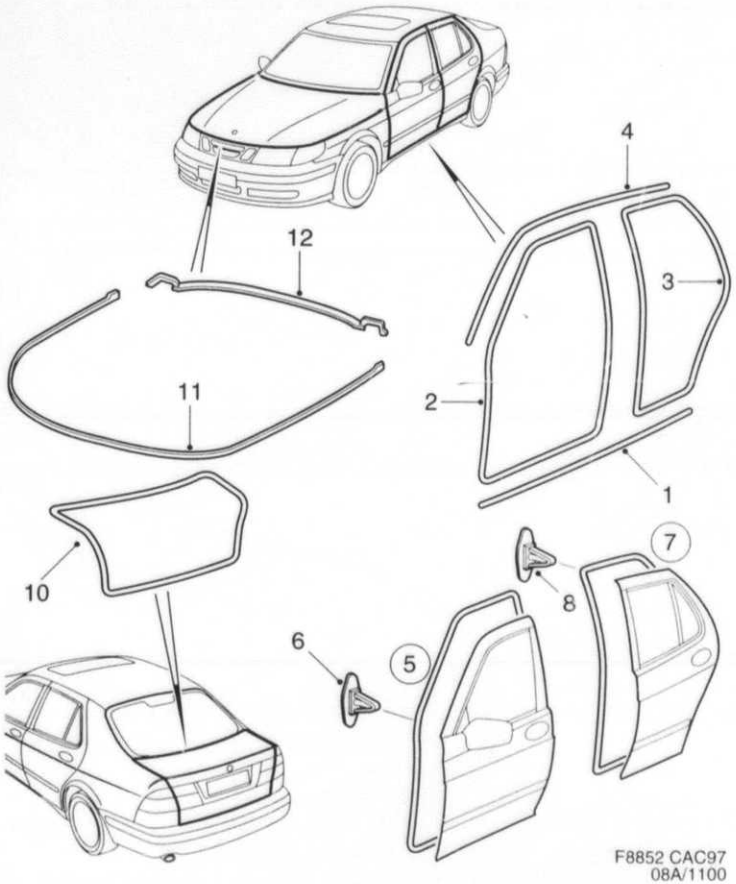

F8852 CAC97
08A/1100

2-D12 External details, glass, sealings / Utvändiga detaljer, glas, tätningslister

Other sealings / *Övriga tätningslister*

1100	Pos	Part No/Art nr	K S	Notes/Anmärkningar	Qty/ Antal	Description	Benämning	S L
0010	1	46 97 314		LH	1	Seal	Tätning	
0020	1	46 97 322		RH	1	Seal	Tätning	
0030								
0040	2	46 98 411			2	Seal	Tätning	
0050	3	46 98 429			2	Seal	Tätning	
0060								
0070	4	45 52 071		LH	1	Seal	Tätning	
0080	4	45 52 089		RH	1	Seal	Tätning	
0090								
0100	5	45 51 859		LH	1	Seal	Tätning	
0110	5	45 51 867		RH	1	Seal	Tätning	
0120	6	45 53 681			25	.Clip	.Clips	
0130								
0140	7	48 52 315		LH	1	Sealing strip	Tätningslist	
0150	7	48 52 323		RH	1	Sealing strip	Tätningslist	
0160	8	45 53 681			28	.Clip	.Clips	
0170								
0180	10	48 52 174			1	Seal	Tätning	
0190								
0200	11			See page 8A-025, 2-C02	X	Seal	Tätning	
0210	12			See page 8A-025, 2-C02	X	Seal	Tätning	

MASTER INDEX

0	General	1-A02
2	Engine	1-C02
3A	Electrical systems, instruments	1-F02
4	Transmission	1-I02
5	Brakes	1-K02
6	Front assembly, Steering	1-L02
7	Suspension, Wheels	2-A02
8A	Body, external	2-B02
8B	Body, internal	2-F02
8C	Body, heating and ventilation	2-H02
8D	Tool, Labels	2-I02
9	Accessories	2-J02
10	Numerical register	3-A02

8A GROUP INDEX

Car body	2-B06
Hood, front, fenders	2-C02
Doors, trunk lid	2-C10
External details, glass, sealings	2-C24
Bumpers and touch-up paint	2-D14
Complete sets	2-E02

2-D14 Bumper, front / Stötfångare, främre

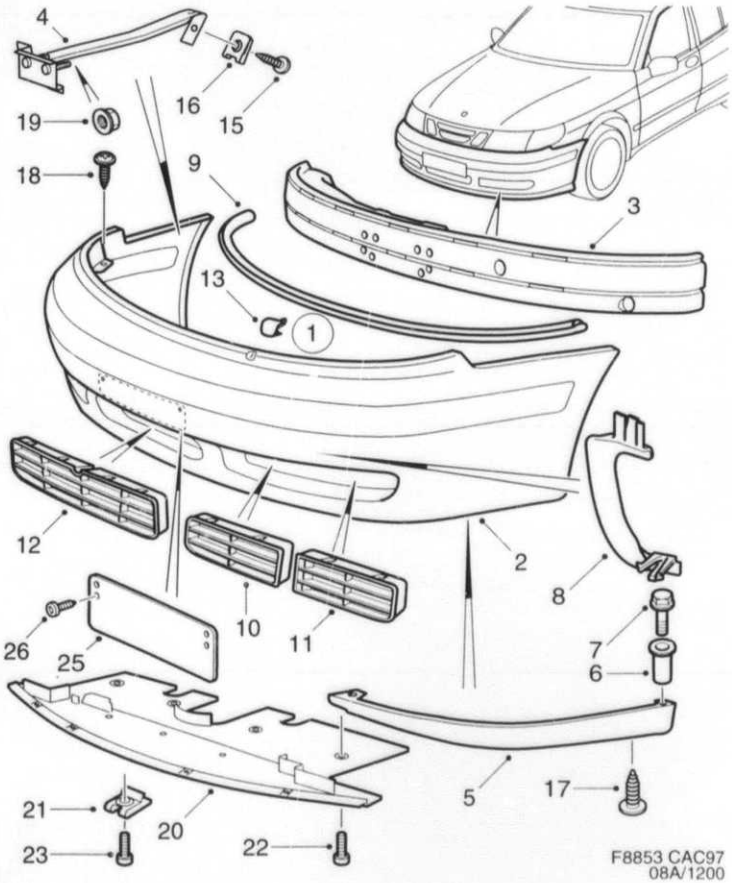

1200	Pos	Part No/Art nr	K S	Notes/Anmärkningar	Qty/ Antal	Description	Benämning	S L
0010	1	45 60 025		109)	1	Bumper	Stötfångare	3
0020	2	45 60 033		109)	1	.Outer casing	.Hölje	3
0030	3	45 60 041			1	.Foam part	.Skumdel	
0040	4	45 60 058		LH	1	.Attaching rail	.Fästskena	6
0050	4	45 60 066		RH	1	.Attaching rail	.Fästskena	
0060	5	45 60 991		LH	1	.Spoiler	.Spoiler	
0070	5	45 61 007		RH	1	.Spoiler	.Spoiler	
0080	6	90 87 040			2	.Nut	.Mutter	5
0090	7	79 78 109			4	.Screw	.Skruv	5
0100								
0110	8	49 19 031		LH	1	Bracket	Konsol	
0120	8	49 19 049		RH	1	Bracket	Konsol	
0130	9	48 33 281		SRA	1	Seal	Tätning	
0140	9	47 85 309		WITHOUT SRA	1	Seal	Tätning	
0150	10	45 61 056		LH	1	Grille	Galler	
0160	10	45 61 064		RH	1	Grille	Galler	
0170	11	45 64 134		LH	1	Grille	Galler	
0180	11	45 64 142		LH	1	Grille	Galler	
0190	12	45 64 233			1	Grille	Galler	
0200	13	47 85 176		WITHOUT SRA	2	Plug	Plugg	
0210								
0220	15	79 77 002			2	Screw	Skruv	5
0230	16	79 77 523			2	Clip	Clips	5
0240	17	79 78 653			2	Screw	Skruv	5
0250	18	79 78 661			4	Hexagon screw	Sexkantsskruv	5
0260	19	79 77 929			2	Nut	Mutter	5
0270								
0280	20	45 93 281			1	Air shield	Luftskärm	
0290	21	79 67 995			4	.Clip nut	.Clipsmutter	3
0300	22	79 72 946			4	Screw	Skruv	5
0310	23	79 77 465			4	Screw	Skruv	5
0320								
0330	25	45 62 948		US, JP	1	Bracket	Hållare	
0340	26	79 22 438		US,JP	4	Screw	Skruv	5

109. Paintable design Lackeringsbart utförande

MASTER INDEX

0	General	1-A02
2	Engine	1-C02
3A	Electrical systems, instruments	1-F02
4	Transmission	1-I02
5	Brakes	1-K02
6	Front assembly, Steering	1-L02
7	Suspension, Wheels	2-A02
8A	Body, external	2-B02
8B	Body, internal	2-F02
8C	Body, heating and ventilation	2-H02
8D	Tool, Labels	2-I02
9	Accessories	2-J02
10	Numerical register	3-A02

8A GROUP INDEX

Car body	2-B06
Hood, front, fenders	2-C02
Doors, trunk lid	2-C10
External details, glass, sealings	2-C24
Bumpers and touch-up paint	2-D14
Complete sets	2-E02

2-D16 Bumper, rear / Stötfångare, bakre

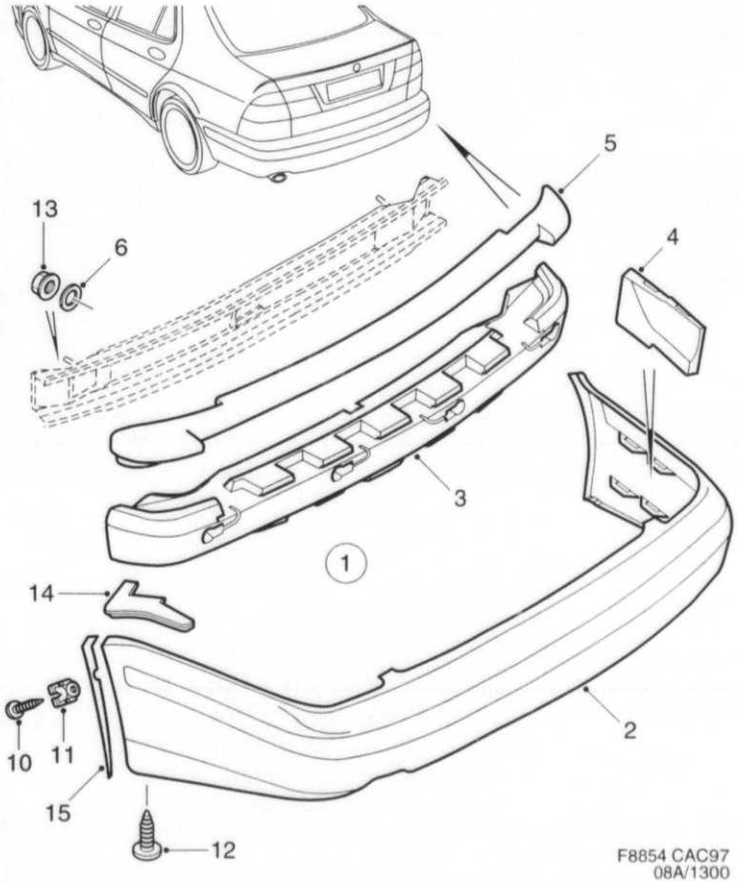

F8854 CAC97
08A/1300

1300	Pos	Part No/Art nr	K S	Notes/Anmärkningar	Qty/ Antal	Description	Benämning	S L
0010	1	45 60 132		109)	1	Bumper	Stötfångare	
0020	2	49 57 072		109)	1	.Outer casing	.Hölje	
0030	3	45 60 876			1	.Foam part	.Skumdel	
0040	4	48 67 255		LH	1	.Stiffener	.Förstyvning	
0050	4	48 67 263		RH	1	.Stiffener	.Förstyvning	
0060	5	45 62 963			1	.Support	.Stöd	
0070	6	09 92 325			4	.Seal	.Tätning	5
0080								
0090	10	79 77 002			2	Screw	Skruv	5
0100	11	79 82 929			2	Press nut	Pressmutter	3
0110	12	79 72 938			2	Screw	Skruv	5
0120	13	79 67 979			4	Nut	Mutter	5
0130	14	45 64 951		LH	1	Seal	Tätning	
0140	14	45 64 969		RH	1	Seal	Tätning	
0150	15	49 13 679		LH	1	Stripe	Dekortejp	
0160	15	49 13 661		RH	1	Stripe	Dekortejp	

109. Paintable design Lackeringsbart utförande

MASTER INDEX

0	General	1-A02
2	Engine	1-C02
3A	Electrical systems, instruments	1-F02
4	Transmission	1-I02
5	Brakes	1-K02
6	Front assembly, Steering	1-L02
7	Suspension, Wheels	2-A02
8A	Body, external	2-B02
8B	Body, internal	2-F02
8C	Body, heating and ventilation	2-H02
8D	Tool, Labels	2-I02
9	Accessories	2-J02
10	Numerical register	3-A02

8A GROUP INDEX

Car body	2-B06
Hood, front, fenders	2-C02
Doors, trunk lid	2-C10
External details, glass, sealings	2-C24
Bumpers and touch-up paint	2-D14
Complete sets	2-E02

2-D18

Bumpers and touch-up paint
1-can

Stötfångare och bättringsfärg
1-komponent

1725	Pos	Part No/Art nr	K S	Notes/Anmärkningar	Qty/ Antal	Description	Benämning	S L
0010						FINISHING PAINT	TÄCKFÄRG	
0020	1L	96 98 168		BODY COLOUR 198	X	Touch-up paint	Bättringsfärg	3
0030						Embassy blue	Ambassadblå	
0040	1/4L	96 98 176		BODY COLOUR 198	X	Touch-up paint	Bättringsfärg	3
0050						Embassy blue	Ambassadblå	
0060	1L	82 85 371		BODY COLOUR 240	X	Touch-up paint	Bättringsfärg	3
0070						Imola red	Imolaröd	
0080	1/4L	82 85 389		BODY COLOUR 240	X	Touch-up paint	Bättringsfärg	3
0090						Imola red	Imolaröd	
0100	1L	84 87 266		BODY COLOUR 153	X	Touch-up paint	Bättringsfärg	3
0110						Cirrus white	Cirrusvit	
0120	1/4L	84 87 274		BODY COLOUR 153	X	Touch-up paint	Bättringsfärg	3
0130						Cirrus white	Cirrusvit	
0140	1L	78 20 228		BODY COLOUR 170	X	Touch-up paint	Bättringsfärg	3
0150						Black	Svart	
0160	1/4L	78 20 244		BODY COLOUR 170	X	Touch-up paint	Bättringsfärg	3
0170						Black	Svart	
0220								
0230	1L	84 87 753			X	Thinner	Förtunning	5
0240	5L	84 87 761			X	Thinner	Förtunning	5
0260								
0270						PRIMER	GRUNDFÄRG	
0280	1L	74 97 019			X	Primer	Grundfärg	6
0290						1K-Fullprimer	1K-Fullprimer	
0300	1L	82 85 231			X	Thinner	Förtunning	5
0310						2K-Expressverdünnung	2K-Expressverdünnung	
0320								
0330						FILLER	SPACKEL	
0340	2KG	82 85 488			X	Polyester filler	Polyesterspackel	6
0350		82 85 496			X	Hardener	Hårdare	5
0360	1L	84 87 621			X	Spray filler	Sprutspackel	6

MASTER INDEX

0	General	1-A02
2	Engine	1-C02
3A	Electrical systems, instruments	1-F02
4	Transmission	1-I02
5	Brakes	1-K02
6	Front assembly, Steering	1-L02
7	Suspension, Wheels	2-A02
8A	Body, external	2-B02
8B	Body, internal	2-F02
8C	Body, heating and ventilation	2-H02
8D	Tool, Labels	2-I02
9	Accessories	2-J02
10	Numerical register	3-A02

8A GROUP INDEX

Car body	2-B06
Hood, front, fenders	2-C02
Doors, trunk lid	2-C10
External details, glass, sealings	2-C24
Bumpers and touch-up paint	2-D14
Complete sets	2-E02

2-D20

Bumpers and touch-up paint
2-can

Stötfångare och bättringsfärg
2-komponent

1750	Pos	Part No/Art nr	K S	Notes/Anmärkningar	Qty/ Antal	Description	Benämning	S L
0010						FINISHING PAINT	TÄCKFÄRG	
0020	1L	96 98 184		BODY COLOUR 198	X	Touch-up paint	Bättringsfärg	3
0030						Embassy blue	Ambassadblå	
0040	1L	82 85 397		BODY COLOUR 240	X	Touch-up paint	Bättringsfärg	3
0050						Imola red	Imolaröd	
0060	1L	84 87 282		BODY COLOUR 153	X	Touch-up paint	Bättringsfärg	3
0070						Cirrus white	Cirrusvit	
0080	1L	97 46 264		BODY COLOUR 170	X	Touch-up paint	Bättringsfärg	3
0090						Black	Svart	
0100	1L	82 85 231			X	Thinner	Förtunning	5
0110						2K-Expressverdünnung	2K-Expressverdünnung	
0120	1/2L	84 86 300			X	Hardener	Härdare	5
0130						2K-Spezialhärter	2K-Spezialhärter	
0140	1L	84 86 292			X	Hardener	Härdare	5
0150						2K-Spezialhärter	2K-Spezialhärter	
0160								
0170						PRIMER	GRUNDFÄRG	
0180	4L	74 97 001			X	Primer	Grundfärg	6
0190						2K-Toppfuller	2K-Toppfuller	
0200	1/2L	84 86 300			X	Hardener	Härdare	5
0210						2K-Spezialhärter	2K-Spezialhärter	
0220	1L	84 86 292			X	Hardener	Härdare	5
0230						2K-Spezialhärter	2K-Spezialhärter	
0240								
0250						INTERMEDIATE PAINT	MELLANFÄRG	
0260	1L	84 87 712			X	Intermediate paint	Mellanfärg	6
0270						2K-Fillsealer	2K-Fillsealer	
0280						Colourable	Infärgningsbar	
0290	1L	82 85 231			X	Thinner	Förtunning	5
0300						2K-Expressverdünnung	2K-Expressverdünnung	
0310	1/2L	84 86 300			X	Hardener	Härdare	5
0320						2K-Spezialhärter	2K-Spezialhärter	
0330	1L	84 86 292			X	Hardener	Härdare	5
0340						2K-Spezialhärter	2K-Spezialhärter	
0350								
0360						FILLER	SPACKEL	
0370	2KG	82 85 488			X	Polyester filler	Polyesterspackel	6
0380		82 85 496			X	Hardener	Härdare	5
0390	1L	84 87 621			X	Spray filler	Sprutspackel	6

MASTER INDEX

0	General	1-A02
2	Engine	1-C02
3A	Electrical systems, instruments	1-F02
4	Transmission	1-I02
5	Brakes	1-K02
6	Front assembly, Steering	1-L02
7	Suspension, Wheels	2-A02
8A	Body, external	2-B02
8B	Body, internal	2-F02
8C	Body, heating and ventilation	2-H02
8D	Tool, Labels	2-I02
9	Accessories	2-J02
10	Numerical register	3-A02

8A GROUP INDEX

Car body	2-B06
Hood, front, fenders	2-C02
Doors, trunk lid	2-C10
External details, glass, sealings	2-C24
Bumpers and touch-up paint	2-D14
Complete sets	2-E02

2-D22

Bumpers and touch-up paint
Two-coat type

Stötfångare och bättringsfärg
Tvåskiktstyp

1775	Pos	Part No/Art nr	K S	Notes/Anmärkningar	Qty/ Antal	Description	Benämning	S L
0010						BASE METALLIC COAT	BASMETALLICFÄRG	
0020	1L	82 84 499		BODY COLOUR 230	X	Touch-up paint	Bättringsfärg	3
0030						Scarabé green	Scarabégrön	
0040	1L	74 97 522		BODY COLOUR 257	X	Touch-up paint	Bättringsfärg	3
0050						Midnight blue	Midnattsblå	
0060	1L	74 97 787		BODY COLOUR 264	X	Touch-up paint	Bättringsfärg	
0070						Cosmic blue	Kosmosblå	
0080	1L	74 97 514		BODY COLOUR 256	X	Touch-up paint	Bättringsfärg	3
0090						Cayenne red	Kajennröd	
0100	1L	74 97 530		BODY COLOUR 258	X	Touch-up paint	Bättringsfärg	3
0110						Amethyst violet	Ametistviolett	
0120	1L	74 97 225		BODY COLOUR 247	X	Touch-up paint	Bättringsfärg	3
0130						Silver	Silver	
0140	1L	74 97 795		BODY COLOUR 268	X	Touch-up paint	Bättringsfärg	
0150						Silver	Silver	
0160	1L	74 97 779		BODY COLOUR 261	X	Touch-up paint	Bättringsfärg	
0170						Green silver	Silvergrön	
0180	1L	74 97 753		BODY COLOUR 262	X	Touch-up paint	Bättringsfärg	
0190						Golden sand	Guldsand	
0200	1L	74 97 761		BODY COLOUR 263	X	Touch-up paint	Bättringsfärg	
0210						Copper bronze	Kopparbrons	
0220	1L	97 46 975			X	Thinner	Förtunning	5
0230								
0240						PRIMER	GRUNDFÄRG	
0250	1L	74 97 019			X	Primer	Grundfärg	6
0260						1K-Füllprimer	1K-Füllprimer	
0270	1L	82 85 231			X	Thinner	Förtunning	5
0280						2K-Expressverdünnung	2K-Expressverdünnung	
0290								
0300						CLEAR ENAMEL	KLARLACK	
0310	1L	84 87 225			X	Clear enamel	Klarlack	3
0320	1L	82 85 231			X	Thinner	Förtunning	5
0330						2K-Expressverdünnung	2K-Expressverdünnung	
0340	1/2L	84 86 300			X	Hardener	Härdare	5
0350						2K-Spezialhärter	2K-Spezialhärter	
0360	1L	84 86 292			X	Hardener	Härdare	5
0370						2K-Spezialhärter	2K-Spezialhärter	
0380								
0390						FILLER	SPACKEL	
0400	2KG	82 85 488			X	Polyester filler	Polyesterspackel	6
0410		82 85 496			X	Hardener	Härdare	5
0420	1L	84 87 621			X	Spray filler	Sprutspackel	6

MASTER INDEX

0	General	1-A02
2	Engine	1-C02
3A	Electrical systems, instruments	1-F02
4	Transmission	1-I02
5	Brakes	1-K02
6	Front assembly, Steering	1-L02
7	Suspension, Wheels	2-A02
8A	Body, external	2-B02
8B	Body, internal	2-F02
8C	Body, heating and ventilation	2-H02
8D	Tool, Labels	2-I02
9	Accessories	2-J02
10	Numerical register	3-A02

8A GROUP INDEX

Car body	2-B06
Hood, front, fenders	2-C02
Doors, trunk lid	2-C10
External details, glass, sealings	2-C24
Bumpers and touch-up paint	2-D14
Complete sets	2-E02

2-D24 Other paint / Övrig färg

1800	Pos	Part No/Art nr	K S	Notes/Anmärkningar	Qty/ Antal	Description	Benämning	S L
0010	1/4L	97 46 835			X	Touch-up paint	Bättringsfärg	3
0020						Charcoal grey 176	Antracitgrå 176	
0030	1L	97 46 975			X	Thinner	Förtunning	5
0040								
0050	1/4L	97 46 850			X	Touch-up paint	Bättringsfärg	3
0060						Black 175	Svart 175	
0070	1L	82 85 231			X	Thinner	Förtunning	5
0080						2K-Expressverdünnung	2K-Expressverdünnung	
0090								
0100						PRIMER	GRUNDFÄRG	
0110	1L	82 85 249			X	Primer	Grundfärg	6
0120						1K-Plastic primer	1K-Plastic primer	
0130						ready to spray	sprutfärdig	
0140	1L	82 85 256			X	Primer	Grundfärg	6
0150						1K-Plastic fuller	1K-Plastic fuller	
0160	1L	97 46 967			X	Thinner	Förtunning	5
0170								
0180						PLASTICIZER	MJUKGÖRARE	
0190	1L	97 46 314			X	Plasticizer	Mjukgörare	6
0200						2K-Elastic adetiv	2K-Elastic adetiv	
0210								
0220	5L	97 46 884			X	Cleaning agent	Rengöringsmedel	6
0230	1KG	82 85 264			X	Filler	Spackel	6
0240	2L	97 46 892			X	Primer	Grundfärg	6
0250	1L	97 46 900			X	Hardener	Härdare	6
0260	1L	97 46 926			X	Intermediate paint	Mellanfärg	6
0270	1L	97 46 934			X	Hardener	Härdare	5
0280	1L	97 46 959			X	Plasticizer	Mjukgörare	6
0290	1L	97 46 652			X	Thinner	Förtunning	5
0300								
0310	5L	84 87 779			X	Cleaning agent	Rengöringsmedel	6
0320						silicon remover	silikonborttagare	
0340	1KG	79 94 882			X	Stone chip interpaint	Stenskottsmellanfärg	6

MASTER INDEX

0	General	1-A02
2	Engine	1-C02
3A	Electrical systems, instruments	1-F02
4	Transmission	1-I02
5	Brakes	1-K02
6	Front assembly, Steering	1-L02
7	Suspension, Wheels	2-A02
8A	Body, external	2-B02
8B	Body, internal	2-F02
8C	Body, heating and ventilation	2-H02
8D	Tool, Labels	2-I02
9	Accessories	2-J02
10	Numerical register	3-A02

8A GROUP INDEX

Car body	2-B06
Hood, front, fenders	2-C02
Doors, trunk lid	2-C10
External details, glass, sealings	2-C24
Bumpers and touch-up paint	2-D14
Complete sets	2-E02

2-E02

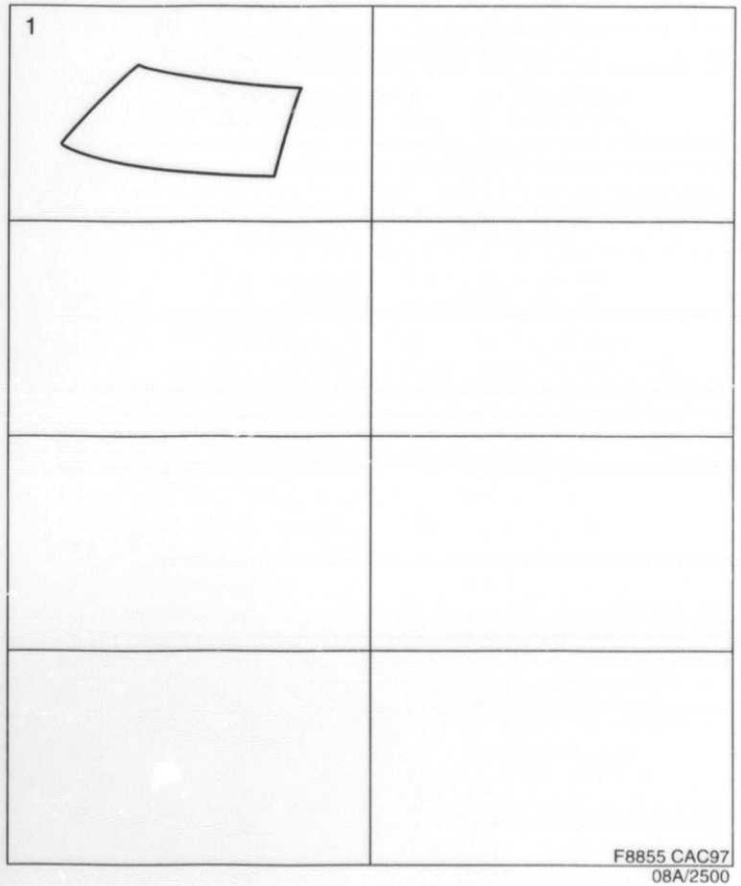

2500	Pos	Part No/Art nr	K S	Notes/Anmärkningar	Qty/ Antal	Description	Benämning	S L
0010	1	45 53 848		23)	X	Windscreen	Vindruta	
0020		45 52 360			1	.Decor	.Dekor	

23. Heat-absorbing glass Värmeabsorberande glas

MASTER INDEX

0	General	1-A02
2	Engine	1-C02
3A	Electrical systems, instruments	1-F02
4	Transmission	1-I02
5	Brakes	1-K02
6	Front assembly, Steering	1-L02
7	Suspension, Wheels	2-A02
8A	Body, external	2-B02
8B	Body, internal	2-F02
8C	Body, heating and ventilation	2-H02
8D	Tool, Labels	2-I02
9	Accessories	2-J02
10	Numerical register	3-A02

8A GROUP INDEX

Car body	2-B06
Hood, front, fenders	2-C02
Doors, trunk lid	2-C10
External details, glass, sealings	2-C24
Bumpers and touch-up paint	2-D14
Complete sets	2-E02

8B

Body, internal
Kaross, invändig
Carrocería, inferior

TABLE OF CONTENTS

0041	**Instrument panel**		
0020	Instrument panel, panel, instrument plate	8B : 5	2-F06
0030	Instrument panel, glove compartment, panel lower	8B : 7	2-F08
0040	Instrument panel, centre console	8B : 9	2-F10
0050	**Upholstery**		
0060	Insulation	8B : 11	2-F12
0160	Damper mat	8B : 13	2-F14
0175	Covers	8B : 15	2-F16
0190	Door trim, front door	8B : 19	2-F20
0200	Door trim, rear door	8B : 21	2-F22
0400	Upholstery luggage compartment	8B : 23	2-F24
0410	Carpets, sill protection	8B : 25	2-G02
0420	Headlining, pillar lining	8B : 27	2-G04
0482	**Other interior equipment**		
0490	Front seats	8B : 29	2-G06
0515	Front seats, electrically adjustable	8B : 33	2-G10
0517	Rear seat	8B : 39	2-G16
0540	Equipment luggage compartment, other interior equipment	8B : 41	2-G18
0550	Shelf	8B : 43	2-G20
0559	Safety belt, front seat	8B : 45	2-G22
0582	Safety belt, rear seat	8B : 47	2-G24
0587			
0590			
0600			
0625			
0630			
0640			

MASTER INDEX

0	General	1-A02
2	Engine	1-C02
3A	Electrical systems, instruments	1-F02
4	Transmission	1-I02
5	Brakes	1-K02
6	Front assembly, Steering	1-L02
7	Suspension, Wheels	2-A02
8A	Body, external	2-B02
8B	Body, internal	2-F02
8C	Body, heating and ventilation	2-H02
8D	Tool, Labels	2-I02
9	Accessories	2-J02
10	Numerical register	3-A02

8B GROUP INDEX

Instrument panel	2-F06
Upholstery	2-F12
Other interior equipment	2-G06

INNEHÅLLSFÖRTECKNING

0042	**Instrumentpanel**		
0810	Instrumentpanel, panel, instrumentplatta	8B : 5	2-F06
0820	Instrumentpanel, handskfack, underdel	8B : 7	2-F08
0920	Instrumentpanel, mittkonsol	8B : 9	2-F10
0935	**Klädsel**		
0950	Isolering	8B : 11	2-F12
0960	Dämpmatta	8B : 13	2-F14
1160	Klädselpåsar	8B : 15	2-F16
1165	Dörrklädsel, framdörr	8B : 19	2-F20
1170	Dörrklädsel, bakdörr	8B : 21	2-F22
1243	Klädsel bagagerum	8B : 23	2-F24
1250	Mattor, tröskelskydd	8B : 25	2-G02
1270	Takklädsel, stolpklädsel. etc	8B : 27	2-G04
1277	**Övrig invändig utrustning**		
1300	Stolar	8B : 29	2-G06
1310	Stolar, elmanövrerade	8B : 33	2-G10
1319	Baksäte	8B : 39	2-G16
1342	Utrustning bagagerum, övrig invändig utrustning	8B : 41	2-G18
1347	Hatthylla	8B : 43	2-G20
1350	Bilbälte, framsäte	8B : 45	2-G22
1360	Bilbälte, baksäte	8B : 47	2-G24
1385			
1390			
1400			

SUMARIO

0042	**Tablero de instrumentos**		
3080	Tablero de instrumentos, panel, placa instrumentos	8B : 5	2-F06
3090	Tablero de instrumentos, guantera, parte inferior	8B : 7	2-F08
3100	Tablero de instrumentos, soporte central	8B : 9	2-F10
3200	**Tapiceria**		
3215	Aislamiento	8B : 11	2-F12
3230	Alfombra amortiguador	8B : 13	2-F14
3240	Fundas de asiento	8B : 15	2-F16
3440	Tapiceria de puerta, porta delantera	8B : 19	2-F20
3445	Tapiceria de puerta, porta Tras	8B : 21	2-F22
3450	Tapiceria compartimento de equipajes	8B : 23	2-F24
3523	Moquetas, guardaumbral	8B : 25	2-G02
3530	Tapiceria del techo, de los montantes, etc	8B : 27	2-G04
3550	**Otro equipo interior**		
3557	Asientos Del	8B : 29	2-G06
3580	Asientos Del, maniobra electrica	8B : 33	2-G10
3590	Asientos Tras	8B : 39	2-G16
3599	Compartimento para equipo, otro equipo interior	8B : 41	2-G18
3622	Tablilla trassera	8B : 43	2-G20
3627	Cinturon de seguridad, Del.	8B : 45	2-G22
3630	Cinturon de seguridad, Tras.	8B : 47	2-G24
3640			
3665			
3670			
3680			

MASTER INDEX

0	General	1-A02
2	Engine	1-C02
3A	Electrical systems, instruments	1-F02
4	Transmission	1-I02
5	Brakes	1-K02
6	Front assembly, Steering	1-L02
7	Suspension, Wheels	2-A02
8A	Body, external	2-B02
8B	Body, internal	2-F02
8C	Body, heating and ventilation	2-H02
8D	Tool, Labels	2-I02
9	Accessories	2-J02
10	Numerical register	3-A02

8B GROUP INDEX

Instrument panel	2-F06
Upholstery	2-F12
Other interior equipment	2-G06

Instrument panel

Instrumentpanel

2-F06 *Panel Instrument plate* *Panel Instrumentplatta*

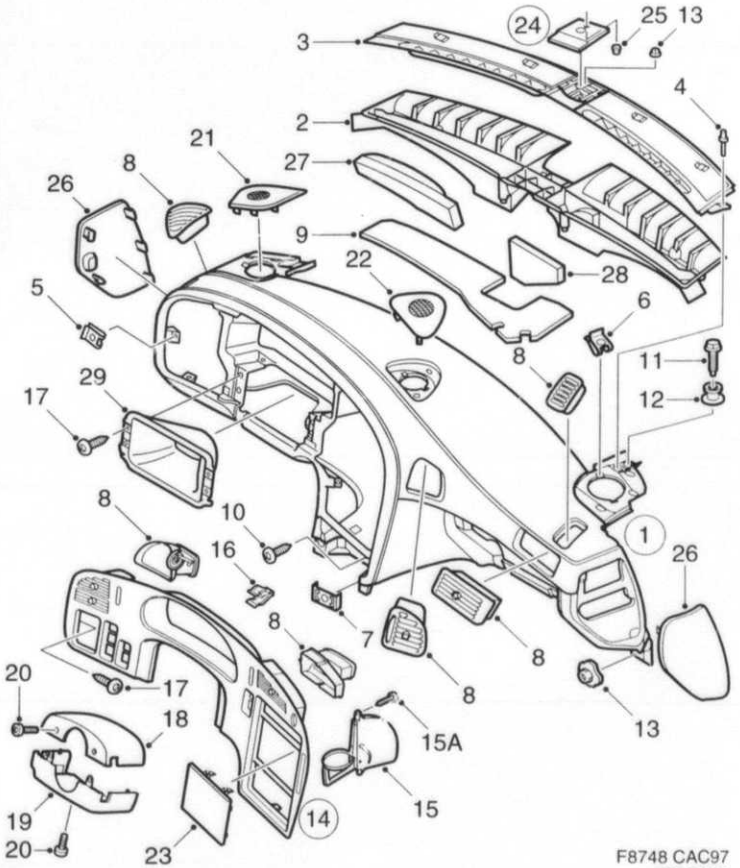

F8748 CAC97
08B/0505

0505	Pos	Part No/Art nr	K S	Notes/Anmärkningar	Qty/ Antal	Description	Benämning	S L
0010	1	47 44 462		30), LHD, AIRBAG 1	1	Instrument panel	Instrumentpanel	
0020	1	47 44 447		40), LHD, AIRBAG 1	1	Instrument panel	Instrumentpanel	
0030	1	46 41 106		30), LHD, AIRBAG 2	1	Instrument panel	Instrumentpanel	
0040	1	46 41 098		40), LHD, AIRBAG 2	1	Instrument panel	Instrumentpanel	
0050	1	47 44 470		30), RHD, AIRBAG 1	1	Instrument panel	Instrumentpanel	
0060	1	47 44 454		40), RHD, AIRBAG 1	1	Instrument panel	Instrumentpanel	
0070	1	46 41 122		30), RHD, AIRBAG 2	1	Instrument panel	Instrumentpanel	
0080	1	46 41 114		40), RHD, AIRBAG 2	1	Instrument panel	Instrumentpanel	
0090	2			1)	1	,Defroster duct	,Defrosterkanal	
0100	3	47 41 013		LHD	1	Cover	Avtäckning	
0110	3	47 41 021		RHD	1	Cover	Avtäckning	
0120	4	44 70 639			2	Expanding rivet	Expandernit	3
0130	5	79 68 001			X	Clip nut	Clipsmutter	5
0140	6	46 85 376			X	Clip nut	Klämmutter	
0150	7	46 85 137			4	Clip	Clips	
0160	8			See page 8C-013, 2-H14		Air outlet	Luftutsläpp	
0170	9	47 05 919		LHD	1	Sound absorber	Ljudabsorbent	
0180	9	48 18 175		RHD	1	Sound absorber	Ljudabsorbent	
0190	10	79 77 002			2	Screw	Skruv	5
0200	11	47 41 963			2	Screw	Skruv	
0210	12	46 09 954			2	Friction washer	Friktionsbricka	
0220	13	40 87 664			3	Nut	Mutter	5
0230	14	46 39 084		LHD	1	Instrument plate	Instrumentplatta	
0240	14	46 39 092		RHD	1	Instrument plate	Instrumentplatta	
0250	14	46 39 100		LHD	1	Instrument plate	Instrumentplatta	
0260						wood	trä	
0270	14	46 40 389		RHD	1	Instrument plate	Instrumentplatta	
0280						wood	trä	
0290	15	46 42 633			1	,Holder	,Hållare	
0300	15A	49 40 102			2	,Screw	,Skruv	
0320	16	44 23 075			4	,Clamp	,Klämma	
0325	8			See page 8C-013, 2-H14	2	,Air outlet	,Luftutsläpp	
0327	17	79 77 002			10	Screw	Skruv	5
0330	18	46 00 193			1	Steering column cover	Rattlagerkåpa	
0340	19	46 00 201			1	Steering column cover	Rattlagerkåpa	
0350	20	79 70 304			3	Screw	Skruv	5
0360	21	46 40 397		LH, LHD	1	Loudspeaker grille	Högtalargaller	
0370	21	46 40 405		RH, LHD	1	Loudspeaker grille	Högtalargaller	
0380	21	46 15 100		LH, RHD	1	Loudspeaker grille	Högtalargaller	
0390	21	46 15 118		RH, RHD	1	Loudspeaker grille	Högtalargaller	
0400	22	46 42 203		LHD	1	Loudspeaker grille	Högtalargaller	
0410	22	46 42 401		RHD	1	Loudspeaker grille	Högtalargaller	
0420	23	47 05 646			1	Cover plate	Täckplatta	
0440	24	47 05 604			1	Cover plate	Täckplatta	
0460	24	47 05 588		ACC	1	Cover plate	Täckplatta	
0470	25	95 93 161			1	,Bracket	,Hållare	5
0480	26	50 12 729		LH, LHD	1	Cover	Täcklock	
0490	26	46 15 266		LH, RHD	1	Cover	Täcklock	
0510	26	46 40 991		RH, LHD	1	Cover	Täcklock	
0530	26	50 12 737		RH, RHD	1	Cover	Täcklock	
0540	27	47 05 927		LH, LHD	1	Sound absorber	Ljudabsorbent	
0550	27	48 18 183		LH, RHD	1	Sound absorber	Ljudabsorbent	
0560	28	47 05 935		RH, LHD	1	Sound absorber	Ljudabsorbent	
0570	28	48 18 191		RH, RHD	1	Sound absorber	Ljudabsorbent	
0580	29	50 13 453			1	Cover	Avtäckning	

1. Not as separate spare part. Ej som separat reservdel.
30. Light beige Ljus beige
40. Grey Grå

MASTER INDEX

0	General	1-A02
2	Engine	1-C02
3A	Electrical systems, instruments	1-F0[illegible]
4	Transmission	1-I02
5	Brakes	1-K02
6	Front assembly, Steering	1-L02
7	Suspension, Wheels	2-A02
8A	Body, external	2-B02
8B	Body, internal	2-F02
8C	Body, heating and ventilation	2-H02
8D	Tool, Labels	2-I02
9	Accessories	2-J02
10	Numerical register	3-A02

8B GROUP INDEX

Instrument panel	2-F06
Upholstery	2-F12
Other interior equipment	2-G06

Instrument panel

2 -F08 Glove compartment Panel lower

Instrumentpanel

Handskfack Underdel

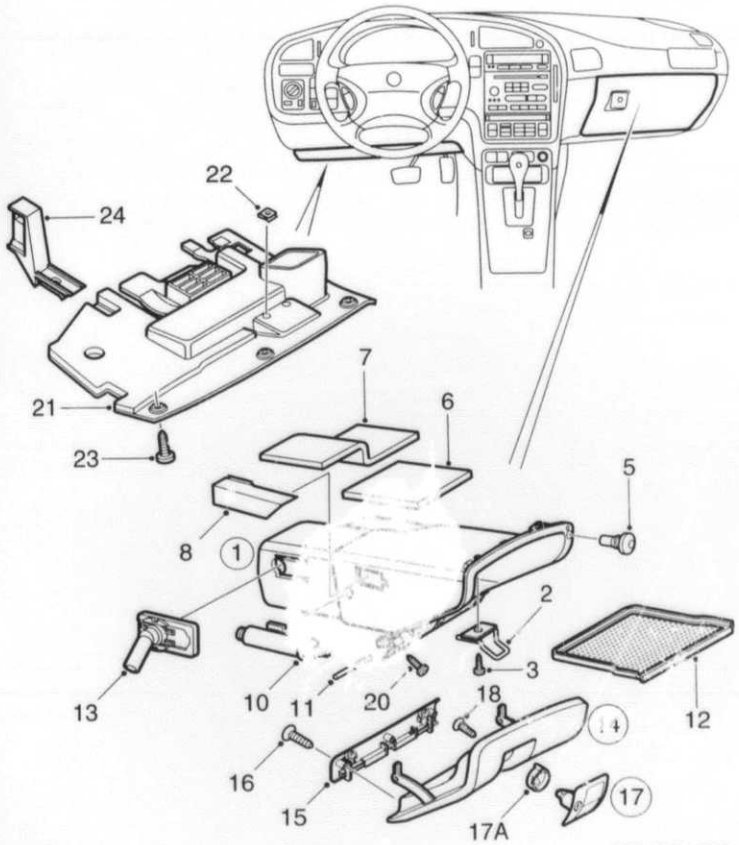

F8749 CAC97
08B/0520

0520	Pos	Part No/Art nr	K S	Notes/Anmärkningar	Qty/ Antal	Description	Benämning	S L
0010	1	47 04 474		LHD	1	Box	Låda	
0020	1	47 04 482		RHD	1	Box	Låda	
0030	2	46 00 805			2	.Lock brace	.Låsbygel	
0040	3	79 77 002			2	.Screw	.Skruv	5
0060	5	45 18 668			2	.Rubber damper	.Gummidämpare	3
0070	6	47 08 368			1	.Insulation	.Isolering	
0080	7	47 89 129			1	.Insulation	.Isolering	
0090	8	48 48 693		LHD	1	.Protecting casing	.Skyddskåpa	
0095	8	48 48 701		RHD	1	.Protecting casing	.Skyddskåpa	
0100	10	44 22 259			2	Absorber	Dämpare	3
0110	11	46 40 959			2	Hinge pin	Gångjärnspinne	
0120	12	46 00 094			1	Rubber mat	Gummimatta	
0130	13	46 32 766			1	Discharge	Utsläpp	
0140	14	46 40 793		30), LHD	1	Glove comparment door	Handskfackslucka	
0150	14	46 40 785		40), LHD	1	Glove comparment door	Handskfackslucka	
0160	14	46 40 827		30), RHD	1	Glove comparment door	Handskfackslucka	
0170	14	46 40 819		40), RHD	1	Glove comparment door	Handskfackslucka	
0180	15	46 00 342		LHD	1	.Lock mechanism	.Låsmekanism	
0190	15	47 89 111		RHD	1	.Lock mechanism	.Låsmekanism	
0195	16	46 85 640			3	.Screw	.Skruv	
0200	17	47 48 240		30), LHD	1	.Handle	.Handtag	
0210	17	47 48 257		40), LHD	1	.Handle	.Handtag	
0220	17	47 48 265		30), RHD	1	.Handle	.Handtag	
0230	17	47 48 273		40), RHD	1	.Handle	.Handtag	
0235	17A	47 47 077			1	..Eccentric washer	..Excenterbricka	
0240	18	46 85 145			2	.Screw	.Skruv	
0250	20	79 77 002			6	Screw	Skruv	5
0260	21	47 00 860		30), LH, LHD	1	Sound insulation	Ljudisolering	
0270	21	47 00 886		30), RH, LHD	1	Sound insulation	Ljudisolering	
0280	21	47 00 852		40), LH, LHD	1	Sound insulation	Ljudisolering	
0290	21	47 00 878		40), RH, LHD	1	Sound insulation	Ljudisolering	
0300	21	47 00 902		30), LH, RHD	1	Sound insulation	Ljudisolering	
0310	21	47 00 928		30), RH, RHD	1	Sound insulation	Ljudisolering	
0320	21	47 00 894		40), LH, RHD	1	Sound insulation	Ljudisolering	
0330	21	47 00 910		40), RH, RHD	1	Sound insulation	Ljudisolering	
0340	22	79 67 995			2	.Clip nut	.Clipsmutter	3
0350	23	79 77 002			7	Screw	Skruv	5
0360	24	46 43 383		LH	1	Bracket	Konsol	
0370	24	46 43 615		RH	1	Bracket	Konsol	

30. Light beige Ljus beige
40. Grey Grå.

MASTER INDEX

0	General	1-A02
2	Engine	1-C02
3A	Electrical systems, instruments	1-F02
4	Transmission	1-I02
5	Brakes	1-K02
6	Front assembly, Steering	1-L02
7	Suspension, Wheels	2-A02
8A	Body, external	2-B02
8B	Body, internal	2-F02
8C	Body, heating and ventilation	2-H02
8D	Tool, Labels	2-I02
9	Accessories	2-J02
10	Numerical register	3-A02

8B GROUP INDEX

Instrument panel	2-F06
Upholstery	2-F12
Other interior equipment	2-G06

2-F10

Centre console

Mittkonsol

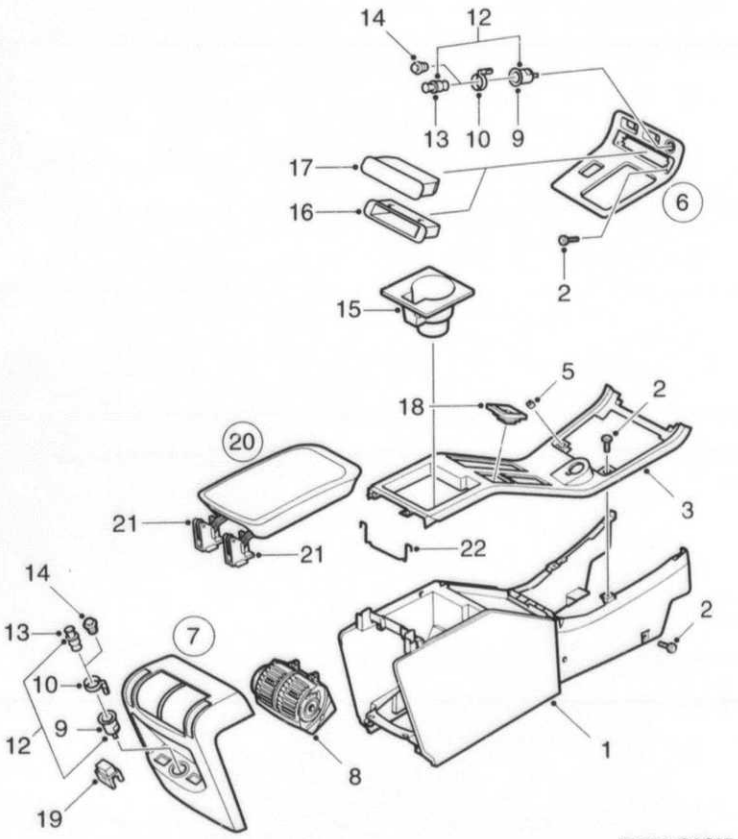

F8750 CAC97
08B/0530

0530	Pos	Part No/Art nr	K S	Notes/Anmärkningar	Qty/ Antal	Description	Benämning	S L
0010	1	46 15 555		30)	1	Centre console	Mittkonsol	
0020	1	46 15 548		40)	1	Centre console	Mittkonsol	
0030	2	79 77 002			12	Screw	Skruv	5
0040	3	46 00 292		LHD	1	Cover	Lock	
0050	3	47 09 515		RHD	1	Cover	Lock	
0070	5	46 85 152			2	.Clip	.Clips	
0080	6	46 38 953		LHD	1	Cover	Avtäckning	
0090	6	46 38 961		RHD	1	Cover	Avtäckning	
0100	6	47 05 968		LHD	1	Cover	Avtäckning	
0110						wood	trä	
0120	6	47 05 992		RHD	1	Cover	Avtäckning	
0130						wood	trä	
0131	9	85 74 477			1	.Cigarette lighter socket	.Cigarettändarhylsa	
0132	10	50 10 699			1	.Light guide	.Ljusledare	
0140	7	46 15 670			1	Cover	Kåpa	
0150	8			See page 8C-013, 2-H14	1	.Air outlet	.Luftutsläpp	
0160	9	85 74 477			1	.Cigarette lighter socket	.Cigarettändarhylsa	
0170	10	50 10 699			1	.Light guide	.Ljusledare	
0180	12	85 74 469			2	Cigarette lighter	Cigarettändare	4
0190	13	85 59 221			1	.Lighter unit	.Tändarenhet	4
0200	14	44 22 192			2	Cover	Lock	
0210	15	47 49 891			1	Holder	Hållare	
0220	16	46 00 250			1	Storage tray	Förvaringsfack	
0230	17	46 15 696			1	Ashtray	Askkopp	
0240	17	46 39 043			1	Ashtray	Askkopp	
0250						wood	trä	
0260	18	47 41 815			1	Coin holder	Mynthållare	
0270	19	48 15 890			2	Blind knob	Blindknapp	
0280	20	48 22 540		30), TRIM COLOUR L01,	1	Arm rest	Armstöd	
0285				L02, L03				
0290	20	48 22 532		40), TRIM COLOUR K01,	1	Arm rest	Armstöd	
0300				K02, K03				
0302	20	48 22 565		30), TRIM COLOUR L04	1	Arm rest	Armstöd	
0304	20	48 22 557		40), TRIM COLOUR K04	1	Arm rest	Armstöd	
0310	20	46 15 597		22,30), TRIM COLOUR	1	Arm rest	Armstöd	
0320				L01, L02, L03				
0330	20	46 15 589		22,40), TRIM COLOUR	1	Arm rest	Armstöd	
0340				K01, K02, K03				
0350	20	46 15 621		22,30), TRIM COLOUR	1	Arm rest	Armstöd	
0360				L04, L05				
0370	20	46 15 613		22,40), TRIM COLOUR	1	Arm rest	Armstöd	
0380				K04, K05				
0390	21	48 48 313		LH	1	.Hinge	.Gångjärn	
0400	21	48 48 321		RH	1	.Hinge	.Gångjärn	
0410	22	50 11 689			1	Brace	Bygel	

22. Adjustable Justerbar
30. Light beige Ljus beige
40. Grey Grå

MASTER INDEX

0	General	1-A02
2	Engine	1-C02
3A	Electrical systems, instruments	1-F02
4	Transmission	1-I02
5	Brakes	1-K02
6	Front assembly, Steering	1-L02
7	Suspension, Wheels	2-A02
8A	Body, external	2-B02
8B	Body, internal	2-F02
8C	Body, heating and ventilation	2-H02
8D	Tool, Labels	2-I02
9	Accessories	2-J02
10	Numerical register	3-A02

8B GROUP INDEX

Instrument panel	2-F06
Upholstery	2-F12
Other interior equipment	2-G06

2-F12 Insulation / Isolering

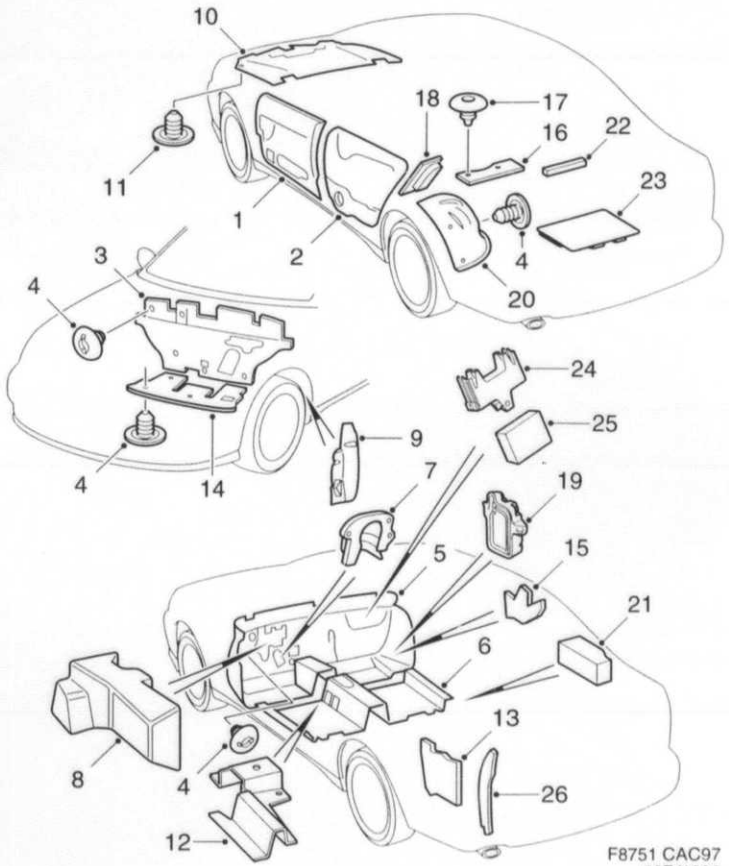

F8751 CAC97
08B/1200

1200	Pos	Part No/Art nr	K S	Notes/Anmärkningar	Qty/ Antal	Description	Benämning	S L
0010	1	46 02 546		LH	1	Water drainage	Vattenavledare	
0020	1	46 02 553		RH	1	Water drainage	Vattenavledare	
0030	2	46 02 561		LH	1	Water drainage	Vattenavledare	
0040	2	46 02 579		RH	1	Water drainage	Vattenavledare	
0050	3	47 94 483		LHD	1	Insulation	Isolering	
0060	3	47 94 491		RHD	1	Insulation	Isolering	
0070	4	42 18 277			X	Push nut	Tryckmutter	6
0080	5	46 36 742		LHD	1	Insulation	Isolering	
0090	5	46 36 759		RHD	1	Insulation	Isolering	
0100	6	48 17 938		LHD	1	Damper mat	Dämpmatta	
0110	6	48 17 946		RHD	1	Damper mat	Dämpmatta	
0120	7	47 06 511			1	Damper mat	Dämpmatta	
0130	8	47 06 529		LHD	1	Sound absorber	Ljudabsorbent	
0140	8	47 06 537		RHD	1	Sound absorber	Ljudabsorbent	
0150	9	46 43 086		LH	1	Sound absorber	Ljudabsorbent	
0160	9	46 43 094		RH	1	Sound absorber	Ljudabsorbent	
0170	10	46 02 629			1	Insulation	Isolering	
0180	11	97 60 497			X	Clamp	Klämma	6
0190	12	47 06 495		LH	1	Sound insulation	Ljudisolering	
0200	12	47 06 503		RH	1	Sound insulation	Ljudisolering	
0210	13	46 02 777		LH	1	Insulation	Isolering	
0220	13	46 02 785		RH	1	Insulation	Isolering	
0230	14	47 00 340			1	Damper mat	Dämpmatta	
0240	15	48 88 061		LHD	1	Sound absorber	Ljudabsorbent	
0250	15	48 88 103		RHD	1	Sound absorber	Ljudabsorbent	
0260	16	50 08 610			2	Sound absorber	Ljudabsorbent	
0270	17	97 60 497			4	Clamp	Klämma	6
0280	18	50 27 487		LH	1	Sound absorber	Ljudabsorbent	
0290	18	50 27 495		RH	1	Sound absorber	Ljudabsorbent	
0300	19	50 27 628		LH	1	Sound insulation	Ljudisolering	
0310	19	50 27 636		RH	1	Sound insulation	Ljudisolering	
0320	20	50 30 234		LH	1	Sound insulation	Ljudisolering	
0330	20	50 30 242		RH	1	Sound insulation	Ljudisolering	
0340	21	50 28 634			2	Insulation	Isolering	
0350	22	40 34 369			1	Seal	Tätning	5
0360	23	50 31 422			1	Floor hatch	Golvlucka	
0370	24	45 78 605			1	Bracket	Fäste	
0380	25	50 31 463		M	1	Sound absorber	Ljudabsorbent	
0390	26	50 31 455		LH	1	Sound insulation	Ljudisolering	
0400	26	50 32 727		RH	1	Sound insulation	Ljudisolering	

MASTER INDEX

0	General	1-A02
2	Engine	1-C02
3A	Electrical systems, instruments	1-F02
4	Transmission	1-I02
5	Brakes	1-K02
6	Front assembly, Steering	1-L02
7	Suspension, Wheels	2-A02
8A	Body, external	2-B02
8B	Body, internal	2-F02
8C	Body, heating and ventilation	2-H02
8D	Tool, Labels	2-I02
9	Accessories	2-J02
10	Numerical register	3-A02

8B GROUP INDEX

Instrument panel	2-F06
Upholstery	2-F12
Other interior equipment	2-G06

2-F14

Damper mat
Dämpmatta

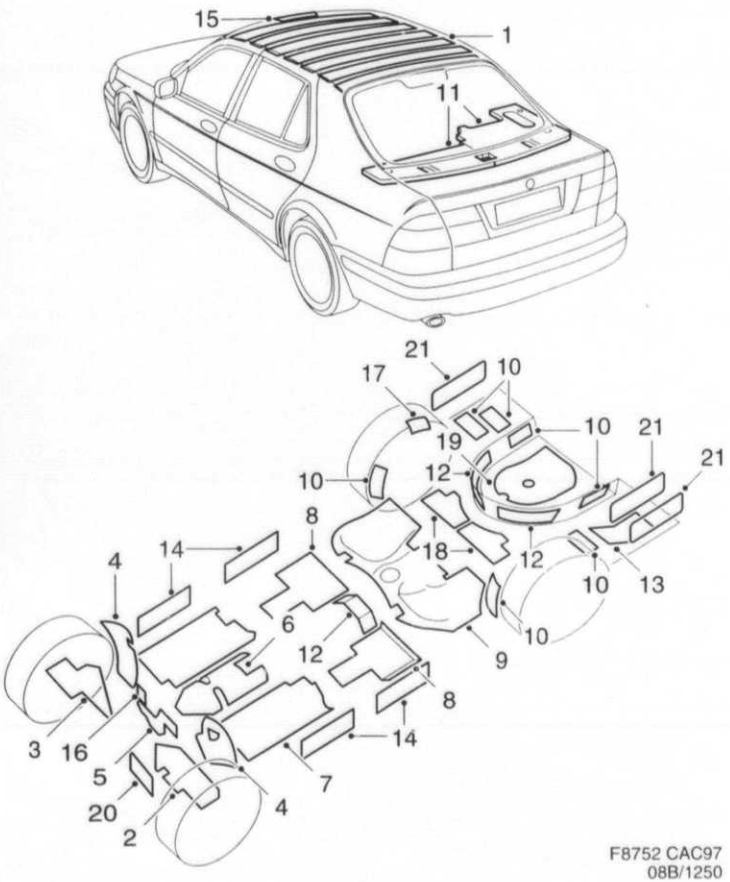

F8752 CAC97
08B/1250

1250	Pos	Part No/Art nr	K S	Notes/Anmärkningar	Qty/ Antal	Description	Benämning	S L
0010	1	97 57 691			7	Damper mat	Dämpmatta	
0020	1	97 57 691		SR	3	Damper mat	Dämpmatta	
0030	2	46 05 549		LH, LHD	1	Insulation	Isolering	
0040	2	46 41 379		LH, RHD	1	Insulation	Isolering	
0050	3	46 41 361		RH, LHD	1	Insulation	Isolering	
0060	3	46 41 387		RH, RHD	1	Insulation	Isolering	
0070	4	46 07 347		LH	1	Damper mat	Dämpmatta	
0080	4	46 41 395		RH	1	Damper mat	Dämpmatta	
0090	5	48 83 161		LHD	1	Damper mat	Dämpmatta	
0095	5	46 05 614		RHD	1	Damper mat	Dämpmatta	
0100	6	46 05 523			1	Damper mat	Dämpmatta	
0110	7	46 05 556		LH	1	Damper mat	Dämpmatta	
0120	7	46 05 564		RH	1	Damper mat	Dämpmatta	
0130	8	46 05 572			2	Damper mat	Dämpmatta	
0140	9	46 05 580		LH	1	Damper mat	Dämpmatta	
0150	9	46 05 598		RH	1	Damper mat	Dämpmatta	
0160	10	42 71 433			7	Damper mat	Dämpmatta	6
0170	11	46 42 187		LH	1	Damper mat	Dämpmatta	
0180	11	46 42 195		RH	1	Damper mat	Dämpmatta	
0190	12	42 71 425			4	Damper mat	Dämpmatta	6
0200	13	46 05 606		LH	1	Damper mat	Dämpmatta	
0210	14	95 44 834			4	Damper mat	Dämpmatta	5
0220	15	84 90 708		SR	1	Cardboard	Pappskiva	5
0230	16	46 82 571		LHD	1	Damper mat	Dämpmatta	6
0240	17	46 82 571			2	Damper mat	Dämpmatta	6
0250	18	47 94 541		LH	1	Damper mat	Dämpmatta	
0260	18	47 94 558		RH	1	Damper mat	Dämpmatta	
0270	19	47 92 388			1	Damper mat	Dämpmatta	
0280	20	50 30 176			2	Damper mat	Dämpmatta	
0290	21	50 28 055			4	Damper mat	Dämpmatta	

MASTER INDEX

0	General	1-A02
2	Engine	1-C02
3A	Electrical systems, instruments	1-F02
4	Transmission	1-I02
5	Brakes	1-K02
6	Front assembly, Steering	1-L02
7	Suspension, Wheels	2-A02
8A	Body, external	2-B02
8B	Body, internal	2-F02
8C	Body, heating and ventilation	2-H02
8D	Tool, Labels	2-I02
9	Accessories	2-J02
10	Numerical register	3-A02

8B GROUP INDEX

Instrument panel	2-F06
Upholstery	2-F12
Other interior equipment	2-G06

2-F16

Upholstery
Covers

Klädsel
Klädselpåsar

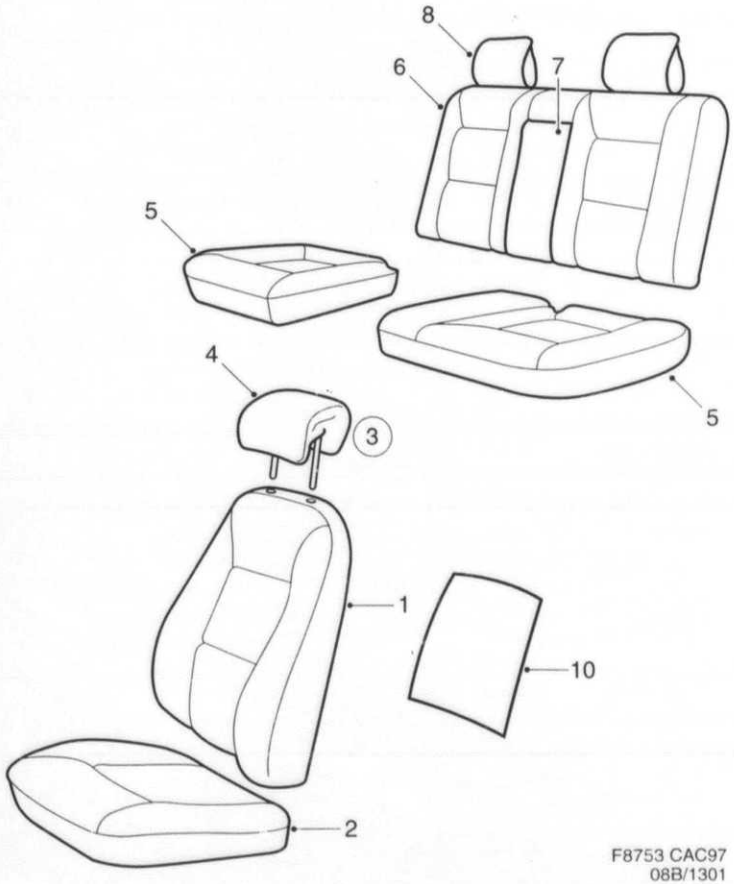

F8753 CAC97
08B/1301

1301	Pos	Part No/Art nr	K S	Notes/Anmärkningar	Qty/ Antal	Description	Benämning	S L
0010				TRIM COLOUR L02				
0020	1	48 02 948		30)	2	Seat cover	Sitspåse	
0030	2	49 32 414		30)	2	Back cover	Ryggpåse	
0040	3	49 32 497		30)	2	Head restraint	Nackstöd	
0050	4			1)	1	,Head restraint cover	,Nackstödspåse	
0060	5	48 02 518		30), LH	1	Seat cover	Sitspåse	6
0070	5	48 02 500		30), RH	1	Seat cover	Sitspåse	6
0080	6	48 02 393		30), LH	1	Back cover	Ryggpåse	6
0090	6	48 02 385		30), RH	1	Back cover	Ryggpåse	6
0100	7			1)		Arm rest cover	Armstödspåse	
0101				See page 8B-039, 2-G16				
0110	8	48 02 674		30), 40/400107496	2	Head restraint cover	Nackstödspåse	
0120				TRIM COLOUR L03				
0130	1	48 02 963		30)	2	Seat cover	Sitspåse	
0140	2	49 32 430		30)	2	Back cover	Ryggpåse	
0150	3	49 32 513		30)	2	Head restraint	Nackstöd	
0160	4			1)	1	,Head restraint cover	,Nackstödspåse	
0170	5	48 02 559		30), LH	1	Seat cover	Sitspåse	6
0180	5	48 02 542		30), RH	1	Seat cover	Sitspåse	6
0190	6	48 02 435		30), LH	1	Back cover	Ryggpåse	6
0200	6	48 02 427		30), RH	1	Back cover	Ryggpåse	6
0211	7			1)		Arm rest cover	Armstödspåse	
0212				See page 8B-039, 2-G16				
0220	8	48 02 690		30), 40/400107512	2	Head restraint cover	Nackstödspåse	
0230				TRIM COLOUR L04				
0240	1	48 02 989		30)	2	Seat cover	Sitspåse	
0250	2	49 32 455		30)	2	Back cover	Ryggpåse	
0260	3	49 32 539		30)	2	Head restraint	Nackstöd	
0270	4			1)	1	,Head restraint cover	,Nackstödspåse	
0280	5	48 02 591		30), LH	1	Seat cover	Sitspåse	6
0290	5	48 02 583		30), RH	1	Seat cover	Sitspåse	6
0300	6	48 02 476		30), LH	1	Back cover	Ryggpåse	6
0310	6	46 28 400		30,24), LH	1	Back cover	Ryggpåse	6
0320	6	48 02 468		30), RH	1	Back cover	Ryggpåse	6
0330	6	46 28 376		30,24), RH	1	Back cover	Ryggpåse	6
0341	7			1)		Arm rest cover	Armstödspåse	
0342				See page 8B-039, 2-G16				
0350	8	48 02 716		30), 40/400107538	2	Head restraint cover	Nackstödspåse	
0360	9	48 02 781		30,24)	2	Seat cover	Sitspåse	
0370				TRIM COLOUR L05				
0380	1	48 03 243		30)	2	Seat cover	Sitspåse	
0390	2	49 32 471		30)	2	Back cover	Ryggpåse	
0400	3	49 32 539		30)	2	Head restraint	Nackstöd	
0410	4			1)	1	,Head restraint cover	,Nackstödspåse	
0417	7			1)		Arm rest cover	Armstödspåse	
0418				See page 8B-039, 2-G16				
0420				TRIM COLOUR K02				
0430	1	48 02 930		40)	2	Seat cover	Sitspåse	
0440	2	49 32 406		40)	2	Back cover	Ryggpåse	
0450	3	49 32 489		40)	2	Head restraint	Nackstöd	
0460	4			1)	1	,Head restraint cover	,Nackstödspåse	
0470	5	48 02 492		40), LH	1	Seat cover	Sitspåse	6
0480	5	48 02 484		40), RH	1	Seat cover	Sitspåse	6
0490	6	48 02 377		40), LH	1	Back cover	Ryggpåse	6
0500	6	48 02 369		40), RH	1	Back cover	Ryggpåse	6
0511	7			1)		Arm rest cover	Armstödspåse	
0512				See page 8B-039, 2-G16				
0520	8	48 02 666		40), 40/400107488	2	Head restraint cover	Nackstödspåse	
0530				TRIM COLOUR K03				

1. Not as separate spare part. Ej som separat reservdel.
24. With integrated child seat Med integrerad barnstol
30. Light beige Ljus beige
40. Grey Grå

MASTER INDEX

0	General	1-A02
2	Engine	1-C02
3A	Electrical systems, instruments	1-F02
4	Transmission	1-I02
5	Brakes	1-K02
6	Front assembly, Steering	1-L02
7	Suspension, Wheels	2-A02
8A	Body, external	2-B02
8B	Body, internal	2-F02
8C	Body, heating and ventilation	2-H02
8D	Tool, Labels	2-I02
9	Accessories	2-J02
10	Numerical register	3-A02

8B GROUP INDEX

Instrument panel	2-F06
Upholstery	2-F12
Other interior equipment	2-G06

2-F18

Upholstery
Covers

Klädsel
Klädselpåsar

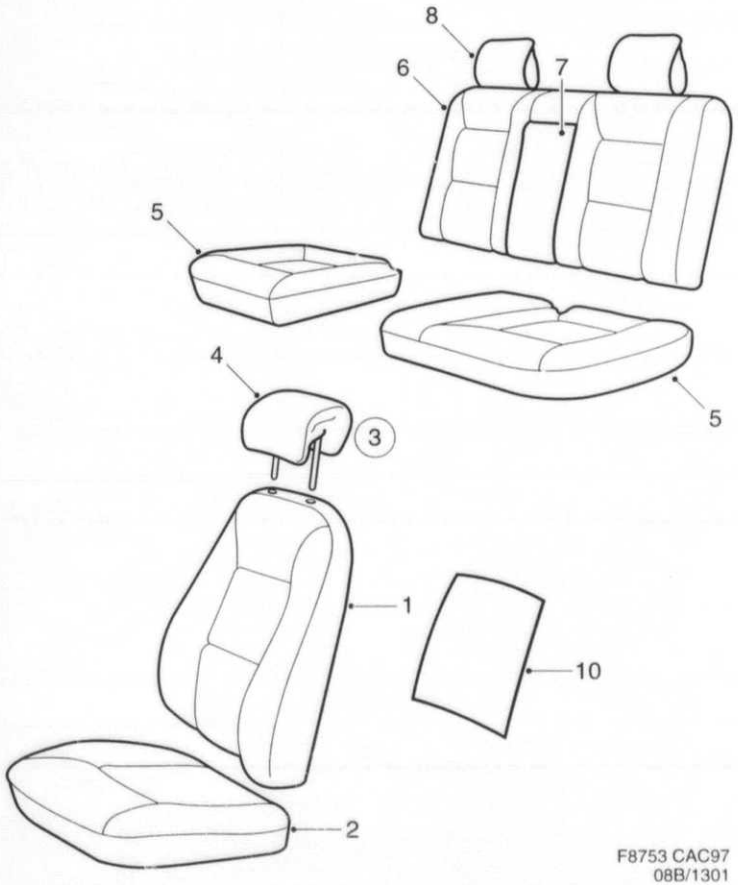

F8753 CAC97
08B/1301

1301	Pos	Part No/Art nr	K S	Notes/Anmärkningar	Qty/ Antal	Description	Benämning	S L
				TRIM COLOUR K03				
0540	1	48 02 955		40)	2	Seat cover	Sitspåse	
0550	2	49 32 422		40)	2	Back cover	Ryggpåse	
0560	3	49 32 505		40)	2	Head restraint	Nackstöd	
0570	4			1)	1	,Head restraint cover	,Nackstödspåse	
0580	5	48 02 534		40), LH	1	Seat cover	Sitspåse	6
0590	5	48 02 526		40), RH	1	Seat cover	Sitspåse	6
0600	6	48 02 419		40), LH	1	Rack cover	Ryggpåse	6
0610	6	48 02 401		40), RH	1	Back cover	Ryggpåse	6
0621	7			1)		Arm rest cover	Armstödspåse	
0622				See page 8B-039, 2-G15				
0630	8	48 02 682		40), 40/400107504	2	Head restraint cover	Nackstödspåse	
0640				TRIM COLOUR K04				
0650	1	48 02 971		40)	2	Seat cover	Sitspåse	
0660	2	49 32 448		40)	2	Back cover	Ryggpåse	
0670	3	49 32 521		40)	2	Head restraint	Nackstöd	
0680	4			1)	1	,Head restraint cover	,Nackstödspåse	
0690	5	48 02 575		40), LH	1	Seat cover	Sitspåse	6
0700	5	48 02 567		40), RH	1	Seat cover	Sitspåse	6
0710	6	48 02 450		40), LH	1	Back cover	Ryggpåse	6
0720	6	46 28 343		40,24), LH	1	Back cover	Ryggpåse	6
0730	6	48 02 443		40), RH	1	Back cover	Ryggpåse	6
0740	6	46 28 319		40,24), RH	1	Back cover	Ryggpåse	6
0751	7			1)		Arm rest cover	Armstödspåse	
0752				See page 8B-039, 2-G16				
0760	8	48 02 708		40), 40/400107520	2	Head restraint cover	Nackstödspåse	
0770	9	48 02 773		40,24)	2	Seat cover	Sitspåse	
0780				TRIM COLOUR K05				
0790	1	48 03 235		40)	2	Seat cover	Sitspåse	
0800	2	49 32 463		40)	2	Back cover	Ryggpåse	
0810	3	49 32 521		40)	2	Head restraint	Nackstöd	
0820	4			1)	1	,Head restraint cover	,Nackstödspåse	
0827	7			1)		Arm rest cover	Armstödspåse	
0828				See page 8B-039, 2-G16				
0830								
0840	10	50 28 113			2	Cardboard	Pappskiva	
0850	10	50 27 396		42)	2	Cardboard	Pappskiva	

1. Not as separate spare part. Ej som separat reservdel.
24. With integrated child seat Med integrerad barnstol
40. Grey Grå
42. With seat ventilation Med stolventilation

MASTER INDEX

0	General	1-A02
2	Engine	1-C02
3A	Electrical systems, instruments	1-F02
4	Transmission	1-I02
5	Brakes	1-K02
6	Front assembly, Steering	1-L02
7	Suspension, Wheels	2-A02
8A	Body, external	2-B02
8B	Body, internal	2-F02
8C	Body, heating and ventilation	2-H02
8D	Tool, Labels	2-I02
9	Accessories	2-J02
10	Numerical register	3-A02

8B GROUP INDEX

Instrument panel	2-F06
Upholstery	2-F12
Other interior equipment	2-G06

2 -F20 Door trim / Dörrklädsel / Front door / Framdörr

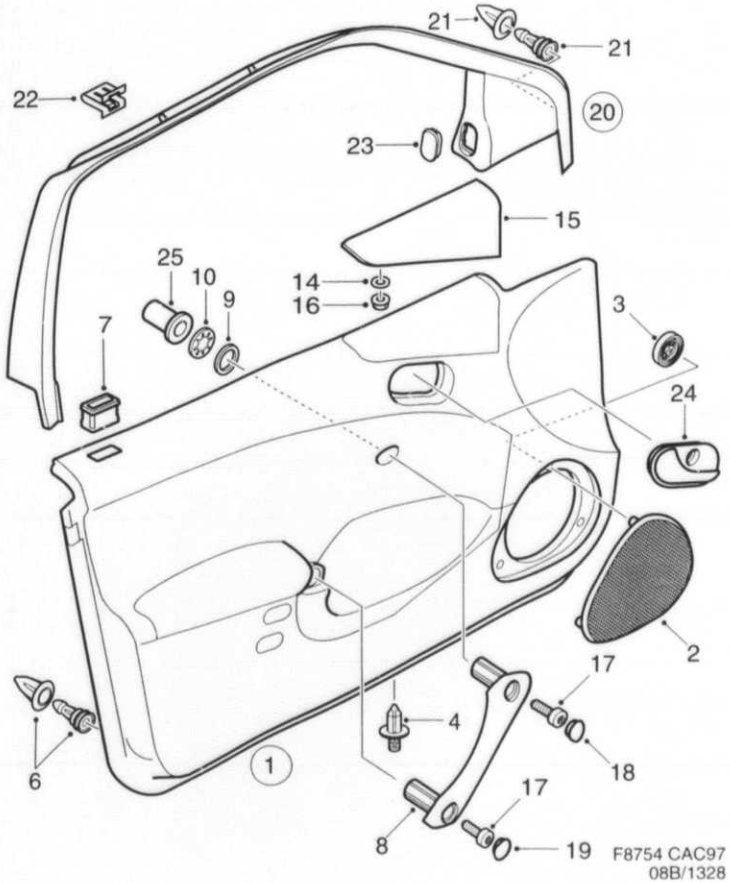

1328	Pos	Part No/Art nr	K S	Notes/Anmärkningar	Qty/ Antal	Description	Benämning	S L
0010				TRIM COLOUR L01, L02				
0020				L03, L04, L05				
0030	1	46 02 223		30), LH, LHD	1	Door trim	Dörrklädsel	
0040	1	46 02 231		30), RH, LHD	1	Door trim	Dörrklädsel	
0050	1	46 44 183		30), LH, RHD	1	Door trim	Dörrklädsel	
0060	1	46 44 191		30), RH, RHD	1	Door trim	Dörrklädsel	
0070				TRIM COLOUR K01, K02				
0080				K03, K04, K05				
0090	1	46 02 207		40), LH, LHD	1	Door trim	Dörrklädsel	
0100	1	46 02 215		40), RH, LHD	1	Door trim	Dörrklädsel	
0110	1	46 44 167		40), LH, RHD	1	Door trim	Dörrklädsel	
0120	1	46 44 175		40), RH, RHD	1	Door trim	Dörrklädsel	
0130								
0140	2	47 05 281		30)	2	.Loudspeaker grille	.Högtalargaller	
0150	2	47 05 273		40)	2	.Loudspeaker grille	.Högtalargaller	
0160	3	44 73 484			X	.Lock washer	.Spärrbricka	
0170	4	46 81 565			1	.Rivet	.Nit	
0190	6	46 82 639			11	.Clamp	.Klämma	
0200	7	42 69 957			1	.Bushing	.Bussning	4
0210	8	47 04 763		30), LH	1	.Handle	.Handtag	5
0220	8	47 04 771		30), RH	1	.Handle	.Handtag	5
0230	8	47 04 748		40), LH	1	.Handle	.Handtag	5
0240	8	47 04 755		40), RH	1	.Handle	.Handtag	5
0250	9	*96 71 389*		NLS – USE 9891391	2	.Washer	.Bricka	5
0260	10	97 97 200			2	.Washer	.Bricka	5
0290	14	79 73 894			3	Washer	Bricka	5
0300	15	47 04 821		LH	1	Wooden insert	Trainlägg	
0310	15	47 04 839		RH	1	Wooden insert	Trainlägg	
0320	16	86 84 847			6	Nut	Mutter	
0330	17	79 78 430			4	Screw	Skruv	
0340	18	46 44 381		30)	2	Cover	Tacklock	
0350	18	46 44 365		40)	2	Cover	Tacklock	
0360	19	46 44 399		30)	2	Cover	Tacklock	
0370	19	46 44 373		40)	2	Cover	Tacklock	
0380	20	46 02 447		LH	1	Upholstery	Klädsel	6
0390	20	46 02 454		RH	1	Upholstery	Klädsel	6
0400	21	46 82 639			2	.Clamp	.Klämma	
0410	22	48 83 757			8	.Clamp	.Klämma	
0420	23	46 02 488			1	Cover	Tacklock	
0430	24			See page 8A-037, 2-C14		Opening handle	Öppningshandtag	
0440	25	73 99 454			4	Nut	Mutter	5

30. Light beige Ljus beige
40. Grey Grå

MASTER INDEX

0	General	1-A02
2	Engine	1-C02
3A	Electrical systems, instruments	1-F02
4	Transmission	1-I02
5	Brakes	1-K02
6	Front assembly, Steering	1-L02
7	Suspension, Wheels	2-A02
8A	Body, external	2-B02
8B	Body, internal	2-F02
8C	Body, heating and ventilation	2-H02
8D	Tool, Labels	2-I02
9	Accessories	2-J02
10	Numerical register	3-A02

8B GROUP INDEX

Instrument panel	2-F06
Upholstery	2-F12
Other interior equipment	2-G06

2-F22 Door trim Rear door / Dörrklädsel Bakdörr

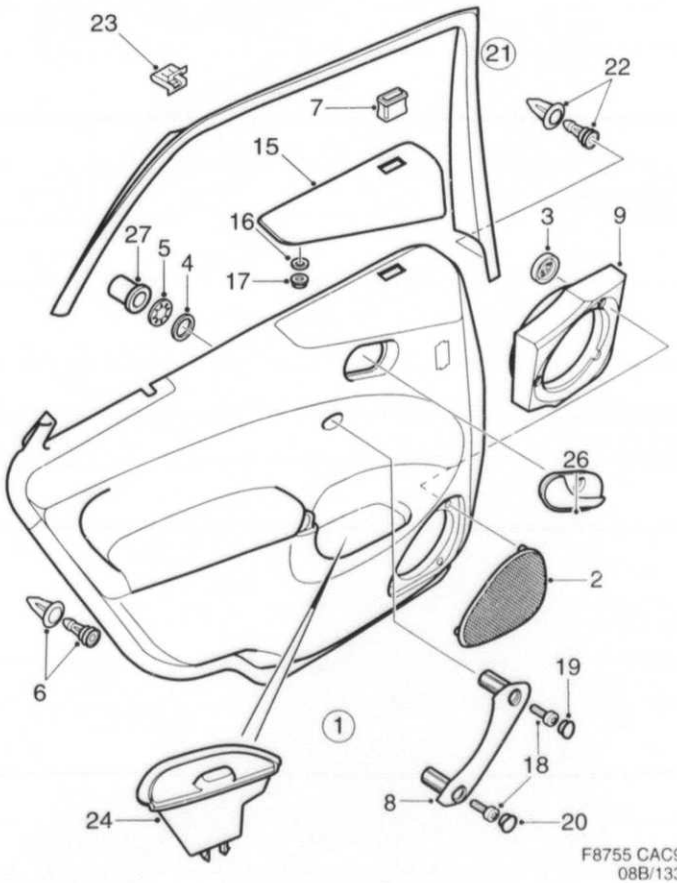

F8755 CAC97
08B/1331

1331	Pos	Part No/Art nr	K S	Notes/Anmärkningar	Qty/ Antal	Description	Benämning	S L
0010				TRIM COLOUR L01, L02,				
0020				L03, L04, L05				
0030	1	46 02 348		30), LH	1	Door trim	Dörrklädsel	
0040	1	46 02 355		30), RH	1	Door trim	Dörrklädsel	
0050				TRIM COLOUR K01, K02,				
0060				K03, K04, K05				
0070	1	46 02 322		LH	1	Door trim	Dörrklädsel	
0080	1	46 02 330		RH	1	Door trim	Dörrklädsel	
0090	2	47 05 158		30)	1	.Loudspeaker grille	.Högtalargaller	
0100	2	47 05 141		40)	1	.Loudspeaker grille	.Högtalargaller	
0110	3	44 73 484			X	.Lock washer	.Spärrbricka	
0120	4	*96 71 389*		NLS - USE 9891391	2	.Washer	.Bricka	5
0130	5	97 97 200			2	.Washer	.Bricka	5
0140	6	46 82 639			11	.Clamp	.Klämma	
0150	7	42 69 957			1	.Bushing	.Bussning	4
0160	8	47 05 042		30), LH	1	.Handle	.Handtag	5
0170	8	47 05 059		30), RH	1	.Handle	.Handtag	5
0180	8	47 05 026		40), LH	1	.Handle	.Handtag	5
0190	8	47 05 034		40), RH	1	.Handle	.Handtag	5
0200	9	46 82 985		LH	1	.Foam part	.Skumdel	
0210	9	47 92 768		RH	1	.Foam part	.Skumdel	
0300	15	47 05 109		LH	1	Wooden insert	Träinlägg	
0310	15	47 05 117		RH	1	Wooden insert	Träinlägg	
0320	16	79 73 894			3	Washer	Bricka	5
0330	17	86 84 847			3	Nut	Mutter	
0340	18	79 78 430			6	Screw	Skruv	
0350	19	46 44 381		30)	2	Cover	Täcklock	
0360	19	46 44 365		40)	2	Cover	Täcklock	
0370	20	46 44 399		30)	2	Cover	Täcklock	
0380	20	46 44 373		40)	2	Cover	Täcklock	
0390	21	46 02 462		LH	1	Upholstery	Klädsel	6
0400	21	46 02 470		RH	1	Upholstery	Klädsel	6
0410	22	46 82 639			2	.Clamp	.Klämma	
0420	23	48 83 757			7	.Clamp	.Klämma	
0430	24	48 19 314		30)	1	Ashtray	Askkopp	
0440	24	48 19 306		40)	1	Ashtray	Askkopp	
0470	26			See page 8A-039, 2-C16		Opening handle	Öppningshandtag	
0480	27	73 99 454			4	Nut	Mutter	5

30. Light beige Ljus beige
40. Grey Grå

MASTER INDEX

0	General	1-A02
2	Engine	1-C02
3A	Electrical systems, instruments	1-F02
4	Transmission	1-I02
5	Brakes	1-K02
6	Front assembly, Steering	1-L02
7	Suspension, Wheels	2-A02
8A	Body, external	2-B02
8B	Body, internal	2-F02
8C	Body, heating and ventilation	2-H02
8D	Tool, Labels	2-I02
9	Accessories	2-J02
10	Numerical register	3-A02

8B GROUP INDEX

Instrument panel	2-F06
Upholstery	2-F12
Other interior equipment	2-G06

2-F24 Luggage compartment / Bagagerum

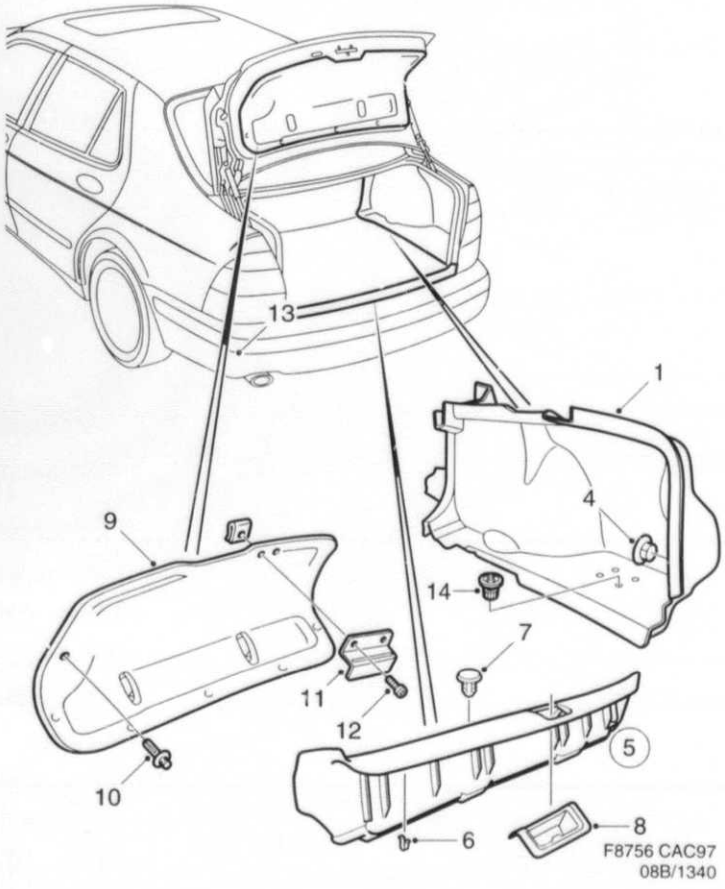

1340	Pos	Part No/Art nr	K S	Notes/Anmärkningar	Qty/ Antal	Description	Benämning	S L
0010	1	45 12 836		LH	1	Luggage compt lining	Bagagerumsklädsel	6
0020	1	45 12 844		RH	1	Luggage compt lining	Bagagerumsklädsel	6
0040	4	48 80 456			6	Push nut	Tryckmutter	6
0050	5	45 12 851			1	Sill protection	Tröskelskydd	5
0060	6	43 88 757			4	Clamp	Klämma	6
0070	7	96 76 057			2	Clamp	Klammer	5
0080	8	47 43 399			1	Protection	Skydd	6
0090	9	45 12 885			1	Upholstery	Klädsel	6
0100	10	48 82 718			X	Rivet	Nit	
0110	11	96 70 548			1	Handle	Handtag	6
0120	12	79 77 960			2	Screw	Skruv	5
0130	13	79 72 573			2	Clip nut	Clipsmutter	5
0140	14	96 76 057		LH	4	Clamp	Klammer	5

MASTER INDEX

0	General	1-A02
2	Engine	1-C02
3A	Electrical systems, instruments	1-F02
4	Transmission	1-I02
5	Brakes	1-K02
6	Front assembly, Steering	1-L02
7	Suspension, Wheels	2-A02
8A	Body, external	2-B02
8B	Body, internal	2-F02
8C	Body, heating and ventilation	2-H02
8D	Tool, Labels	2-I02
9	Accessories	2-J02
10	Numerical register	3-A02

8B GROUP INDEX

Instrument panel	2-F06
Upholstery	2-F12
Other interior equipment	2-G06

2-G02

Upholstery
Carpet
Sill protection

Klädsel
Matta
Tröskelskydd

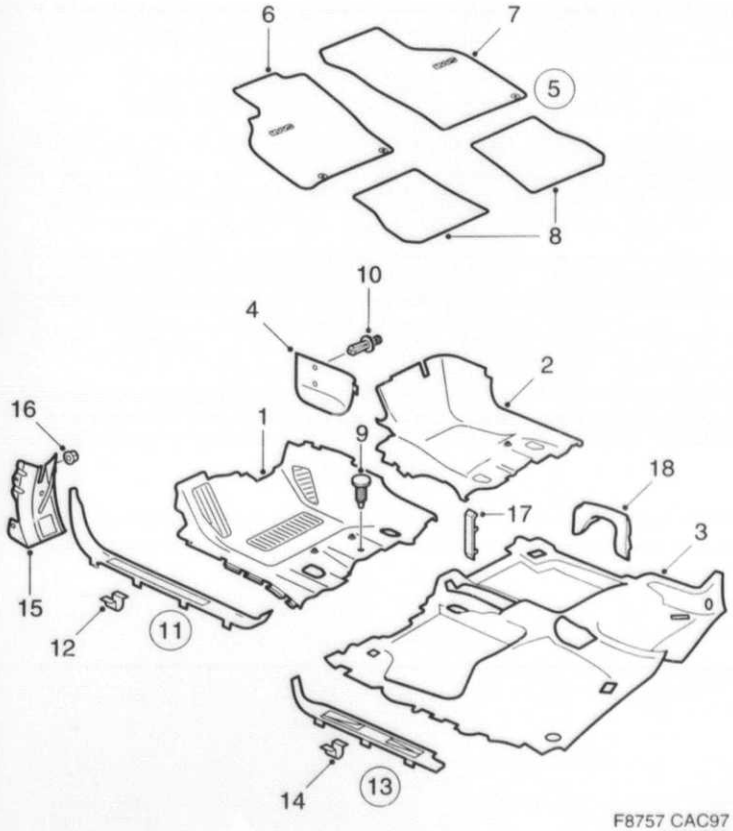

F8757 CAC97
8B/1370

1370	Pos	Part No/Art nr	K S	Notes/Anmärkningar	Qty/ Antal	Description	Benämning	S L
0010				TRIM COLOUR L01, L02,				
0020				L03, L04, L05				
0030	1	46 02 819		30), LH, LHD	1	Carpet	Matta	6
0040	2	46 04 468		30), RH, LHD	1	Carpet	Matta	6
0050	1	46 02 843		30), LH, RHD	1	Carpet	Matta	6
0060	2	46 04 492		30), RH, RHD	1	Carpet	Matta	6
0070	3	46 02 876		30)	1	Carpet	Matta	6
0080	4	46 09 012		30), LHD	1	Cover	Kåpa	
0090	4	46 09 020		30), RHD	1	Cover	Kåpa	
0100	5	48 23 571		30), LHD, 40/400107363	1	Textile mat	Textilmatta	
0110	5	48 23 597		30), RHD, 40/400107389	1	Textile mat	Textilmatta	
0120	6	46 80 245		30),LH,LHD, 40/400107405	1	.Carpet	.Matta	6
0130	7	46 80 278		30),RH,RHD, 40/400107421	1	.Carpet	.Matta	6
0140	8			1)	2	.Carpet	.Matta	
0150				TRIM COLOUR K01, K02,				
0160				K03, K04, K05				
0170	1	46 02 801		40), LH, LHD	1	Carpet	Matta	6
0180	2	46 04 450		40), RH, LHD	1	Carpet	Matta	6
0190	1	46 02 835		40), LH, RHD	1	Carpet	Matta	6
0200	2	46 04 484		40), RH, RHD	1	Carpet	Matta	6
0210	3	46 02 868		40)	1	Carpet	Matta	6
0220	4	46 08 360		40), LHD	1	Cover	Kåpa	
0230	4	46 08 378		40), RHD	1	Cover	Kåpa	
0240	5	48 23 563		40), LHD, 40/400107355	1	Textile mat	Textilmatta	
0250	5	48 23 589		40), RHD, 40/400107371	1	Textile mat	Textilmatta	
0260	6	46 80 187		40),LH,LHD, 40/400107397	1	.Carpet	.Matta	6
0270	7	46 80 211		40),RH,RHD, 40/400107413	1	.Carpet	.Matta	6
0280	8			1)	2	.Carpet	.Matta	
0290								
0300	9	50 31 182		30)	4	Rivet	Nit	
0305	9	50 31 174		40)	4	Rivet	Nit	
0310	10	48 24 330		30)	3	Rivet	Nit	
0320	10	48 24 322		40)	3	Rivet	Nit	
0330	11	47 47 747		30), LH	1	Sill protection	Tröskelskydd	5
0340	11	47 47 770		30), RH	1	Sill protection	Tröskelskydd	5
0350	11	47 47 648		40), LH	1	Sill protection	Tröskelskydd	5
0360	11	47 47 671		40), RH	1	Sill protection	Tröskelskydd	5
0370	12	43 88 757			5	.Clamp	.Klämma	6
0380	13	47 47 796		30), LH	1	Sill protection	Tröskelskydd	5
0390	13	47 47 820		30), RH	1	Sill protection	Tröskelskydd	5
0400	13	47 47 705		40), LH	1	Sill protection	Tröskelskydd	5
0410	13	47 47 721		40), RH	1	Sill protection	Tröskelskydd	5
0420	14	43 88 757			3	.Clamp	.Klämma	6
0430	15	47 41 724		LH	1	Bracket	Konsol	
0440	15	47 41 732		RH	1	Bracket	Konsol	
0450	16	79 85 377			4	Nut	Mutter	5
0460	17	48 22 466		30)	2	Cover moulding	Täcklist	
0470	17	48 22 458		40)	2	Cover moulding	Täcklist	
0480	18	49 31 317		LH	1	Support case	Stödkåpa	6
0490	18	49 31 325		RH	1	Support case	Stödkåpa	6

1. Not as separate spare part. Ej som separat reservdel.
30. Light beige Ljus beige
40. Grey Grå

MASTER INDEX

0	General	1-A02
2	Engine	1-C02
3A	Electrical systems, instruments	1-F02
4	Transmission	1-I02
5	Brakes	1-K02
6	Front assembly, Steering	1-L02
7	Suspension, Wheels	2-A02
8A	Body, external	2-B02
8B	Body, internal	2-F02
8C	Body, heating and ventilation	2-H02
8D	Tool, Labels	2-I02
9	Accessories	2-J02
10	Numerical register	3-A02

8B GROUP INDEX

Instrument panel	2-F06
Upholstery	2-F12
Other interior equipment	2-G06

Upholstery

2 -G04 *Head- and pillar lining*

Klädsel

Takklädsel,stolpklädsel

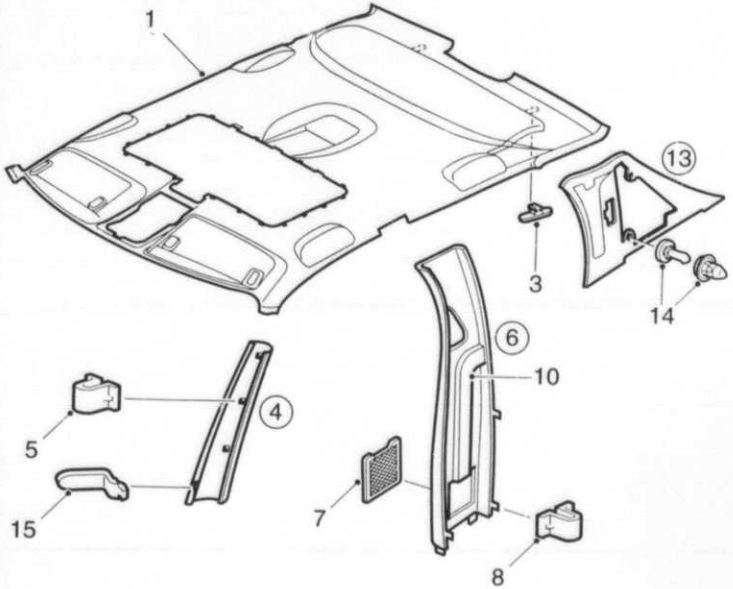

F8758 CAC97
08B/1400

1400	Pos	Part No/Art nr	K S	Notes/Anmärkningar	Qty/ Antal	Description	Benämning	S L
0010	1	46 83 827			1	Head lining	Takklädsel	6
0020	1	46 42 716		SR	1	Head lining	Takklädsel	6
0040	3	97 85 031			2	Upholstery clip	Klädselfäste	5
0050	4	47 06 099		LH	1	Pillar trim	Stolpklädsel	6
0060	4	47 06 115		RH	1	Pillar trim	Stolpklädsel	6
0070	5	43 88 757			3	.Clamp	.Klämma	6
0080	6	47 06 255		30), LH	1	Pillar trim	Stolpklädsel	6
0090	6	47 06 289		30), RH	1	Pillar trim	Stolpklädsel	6
0100	6	47 06 198		40), LH	1	Pillar trim	Stolpklädsel	6
0110	6	47 06 222		40), RH	1	Pillar trim	Stolpklädsel	6
0120	7	48 17 342		30), LH	1	.Net	.Nät	
0130	7	48 17 359		30), RH	1	.Net	.Nät	
0140	7	48 17 326		40), LH	1	.Net	.Nät	
0150	7	48 17 334		40), RH	1	.Net	.Nät	
0160	8	43 88 757			5	.Clamp	.Klämma	6
0180	10			1)	1	.Air duct	.Luftkanal	
0200	13	45 12 646		LH	1	Pillar trim	Stolpklädsel	6
0210	13	45 12 653		RH	1	Pillar trim	Stolpklädsel	6
0220	14	46 44 670			5	.Clamp	.Klämma	6
0230	15	45 12 620			2	Ticket clip	Biljetthållare	

1. Not as separate spare part. Ej som separat reservdel.
30. Light beige Ljus beige
40. Grey Grå

MASTER INDEX

0	General	1-A02
2	Engine	1-C02
3A	Electrical systems, instruments	1-F02
4	Transmission	1-I02
5	Brakes	1-K02
6	Front assembly, Steering	1-L02
7	Suspension, Wheels	2-A02
8A	Body, external	2-B02
8B	Body, internal	2-F02
8C	Body, heating and ventilation	2-H02
8D	Tool, Labels	2-I02
9	Accessories	2-J02
10	Numerical register	3-A02

8B GROUP INDEX

Instrument panel	2-F06
Upholstery	2-F12
Other interior equipment	2-G06

2-G06

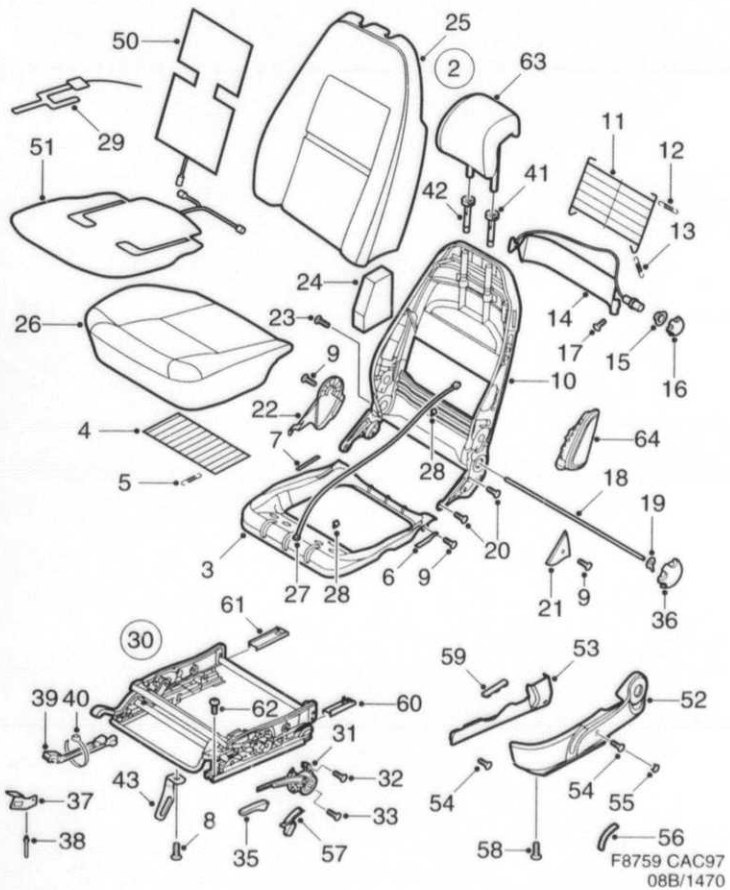

1470	Pos	Part No/Art nr	K S	Notes/Anmärkningar	Qty/ Antal	Description	Benämning	S L
0040	2	48 41 888		LH, LHD	1	Framework	Stomme	
0050	2	48 41 920		RH, LHD	1	Framework	Stomme	
0055	2	49 30 731		RH, LHD, AIRBAG 2	1	Framework	Stomme	
0057	2	49 30 749		37), RH, LHD	1	Framework	Stomme	
0058	2	49 30 756		37), RH, LHD, AIRBAG 2	1	Framework	Stomme	
0060	2	48 41 938		LH, RHD	1	Framework	Stomme	
0062	2	49 30 764		LH, RHD, AIRBAG 2	1	Framework	Stomme	
0064	2	49 30 772		37), LH, RHD	1	Framework	Stomme	
0066	2	49 30 780		37), LH, RHD, AIRBAG 2	1	Framework	Stomme	
0070	2	48 41 896		RH, RHD	1	Framework	Stomme	
0080	3	46 58 589			1	.Seat pan	.Sitsplåt	
0090	4	46 54 463			1	.Wire matting	.Resårmatta	
0100	5	46 54 471			8	.Spring	.Fjäder	
0110	6	46 54 448		LH	1	.Spacer	.Mellanlägg	
0120	7	46 54 455		RH	1	.Spacer	.Mellanlägg	
0130	8	44 96 626			2	.Screw	.Skruv	
0140	9	48 02 229			4	.Screw	.Skruv	
0150	10	49 35 433			1	.Backrest frame	.Ryggram	
0160	11	48 87 246			1	.Wire matting	.Resårmatta	
0170	12	46 54 570			2	.Spring	.Fjäder	
0180	13	46 54 588			2	.Spring	.Fjäder	
0190	14	50 32 784		LH	1	.Lumbar support	.Svankstöd	
0200	14	50 32 792		RH	1	.Lumbar support	.Svankstöd	
0210	15	46 58 316			1	.Cover ring	.Täckring	
0220	16	46 54 406			1	.Hand wheel	.Ratt	
0230	17	79 22 347			2	.Screw	.Skruv	5
0240	18	48 45 822			1	.Shaft	.Axel	
0250	19	43 47 928			1	.Clamping ring	.Klämring	
0260	20	47 98 906			4	.Screw	.Skruv	
0270	21	48 45 897		LH	1	.Protecting casing	.Skyddskåpa	
0280	21	48 45 889		RH	1	.Protecting casing	.Skyddskåpa	
0290	22	49 37 975		LH	1	.Cover	.Kåpa	
0300	22	49 37 983		RH	1	.Cover	.Kåpa	
0310	23	44 60 945			1	.Plug	.Plugg	
0320	24	50 05 723			1	.Dummy	.Attrapp	
0330	25	48 00 017			1	.Foam plastic cushion	.Skumplastdyna	
0340	26	46 54 414			1	.Foam plastic cushion	.Skumplastdyna	
0350	27	48 46 820			1	.Cable harness	.Ledningsnät	
0360	28	71 08 491			4	.Clamp	.Klammer	5
0370	29	46 54 984		34)	1	.Contact	.Kontakt	
0380	30	46 54 620		37), LH	1	.Seat chassis	.Stolchassi	
0390	30	46 58 365		37), RH	1	.Seat chassis	.Stolchassi	
0405	30	46 58 381		34), LHD	1	.Seat chassis	.Stolchassi	
0412	30	46 58 373		34), RHD	1	.Seat chassis	.Stolchassi	
0420	31	46 54 646		LH	1	..Control	..Reglage	
0430	31	46 58 449		RH	1	..Control	..Reglage	
0440	32	79 22 354			1	..Screw	..Skruv	5
0450	33	*84 41 503*		NLS - USE 7970601	3	..Screw	..Skruv	5
0460	35	46 54 729		LH	1	.Handle	.Handtag	
0470	35	46 58 456		RH	1	.Handle	.Handtag	
0480	36	46 54 596			1	.Hand wheel	.Ratt	
0490	37	48 00 447			1	.Bracket	.Konsol	6
0500	38	45 34 798			2	.Blind rivet	.Blindnit	
0510	39	48 46 846		33)	1	.Cable harness	.Ledningsnät	
0520	39	48 46 838		34)	1	.Cable harness	.Ledningsnät	
0530	40	79 71 872			3	.Tensioning band	.Spännband	5
0540	41	48 00 058		LH	1	.Sleeve	.Hylsa	
0550	42	48 00 041		RH	1	.Sleeve	.Hylsa	
0560	43	50 26 901		LH	1	.Child seat mounting	.Barnstolsinfästning	
0570	43	50 26 919		RH	1	.Child seat mounting	.Barnstolsinfästning	

33. Driver seat Förarstol
34. Passanger seat Passagerarstol
37. Height adjustable Justerbar i höjdled

MASTER INDEX

0	General	1-A02
2	Engine	1-C02
3A	Electrical systems, instruments	1-F02
4	Transmission	1-I02
5	Brakes	1-K02
6	Front assembly, Steering	1-L02
7	Suspension, Wheels	2-A02
8A	Body, external	2-B02
8B	Body, internal	2-F02
8C	Body, heating and ventilation	2-H02
8D	Tool, Labels	2-I02
9	Accessories	2-J02
10	Numerical register	3-A02

8B GROUP INDEX

Instrument panel	2-F06
Upholstery	2-F12
Other interior equipment	2-G06

2-G08 Seat / Stol

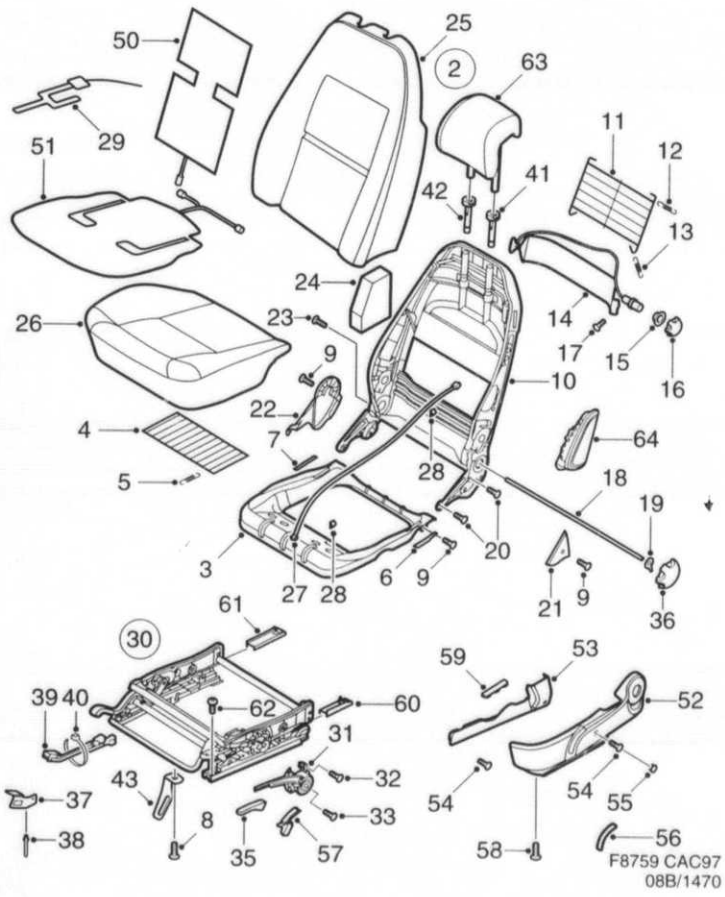

1470	Pos	Part No/Art nr	K S	Notes/Anmärkningar	Qty/ Antal	Description	Benämning	S L
1000	50	47 18 524			2	Heating pad	Värmedyna	
1010	51	49 36 431			2	Heating pad	Värmedyna	
1020	52	48 45 954		30,37), LH	1	Cover	Kåpa	
1030	52	48 45 962		40,37), LH	1	Cover	Kåpa	
1032	52	48 45 970		30,37), RH	1	Cover	Kåpa	
1034	52	48 45 988		40,37), RH	1	Cover	Kåpa	
1040	52	48 46 010		30), RH, LHD	1	Cover	Kåpa	
1050	52	48 46 028		40), RH, LHD	1	Cover	Kåpa	
1060	52	48 45 996		30), LH, RHD	1	Cover	Kåpa	
1070	52	48 46 002		40), LH, RHD	1	Cover	Kåpa	
1100	53	48 46 119		30,37), LH	1	Cover	Kåpa	
1110	53	48 46 127		40,37), LH	1	Cover	Kåpa	
1120	53	48 46 135		30,37), RH	1	Cover	Kåpa	
1130	53	48 46 143		40,37), RH	1	Cover	Kåpa	
1140	54	79 22 347			X	Screw	Skruv	5
1160	55	48 46 192		30,37)	1	Cover	Täcklock	
1170	55	48 46 200		40,37)	1	Cover	Täcklock	
1180	55	48 46 218		30,34)	1	Cover	Täcklock	
1190	55	48 46 226		40,34)	1	Cover	Täcklock	
1200	56	49 32 836		30), LH	1	Frame	Ram	
1210	56	49 32 893		40), LH	1	Frame	Ram	
1220	56	49 32 851		30), RH	1	Frame	Ram	
1230	56	49 32 901		40), RH	1	Frame	Ram	
1240	57	50 02 530		LH	1	Cover	Avtäckning	
1250	57	50 02 548		RH	1	Cover	Avtäckning	
1260	58	79 72 938			2	Screw	Skruv	5
1270	59	49 31 101			2	Clamp	Klämma	
1300	60	50 01 995		35,2), LH	1	Cover	Avtäckning	
1310	60	50 02 001		35,2), RH	1	Cover	Avtäckning	
1313	60	46 54 737		35,3), LH	1	Cover	Avtäckning	
1316	60	47 16 577		35,3), RH	1	Cover	Avtäckning	
1320	61	50 02 019		36,2), LH	1	Cover	Avtäckning	
1330	61	50 02 027		36,2), RH	1	Cover	Avtäckning	
1333	61	47 16 593		36,3), LH	1	Cover	Avtäckning	
1336	61	47 16 601		36,3), RH	1	Cover	Avtäckning	
1340	62	46 85 988			4	Screw	Skruv	
1350	63			1)		Head restraint	Nackstöd	
1360				See page 8B-015, 2-F16				
1370	64			See page 6-007, 1-L08		Airbag module	Airbagmodul	

1. Not as separate spare part. Ej som separat reservdel.
2. Front. Främre.
3. Rear. Bakre.
30. Light beige Ljus beige
34. Passanger seat Passagerarstol
35. Outer Yttre
36. Inner Inre
37. Height adjustable Justerbar i höjdled
40. Grey Grå

MASTER INDEX

0	General	1-A02
2	Engine	1-C02
3A	Electrical systems, instruments	1-F02
4	Transmission	1-I02
5	Brakes	1-K02
6	Front assembly, Steering	1-L02
7	Suspension, Wheels	2-A02
8A	Body, external	2-B02
8B	Body, internal	2-F02
8C	Body, heating and ventilation	2-H02
8D	Tool, Labels	2-I02
9	Accessories	2-J02
10	Numerical register	3-A02

8B GROUP INDEX

Instrument panel	2-F06
Upholstery	2-F12
Other interior equipment	2-G06

2-G10 Seat Electrically adjustable

Stol Elmanövrerade

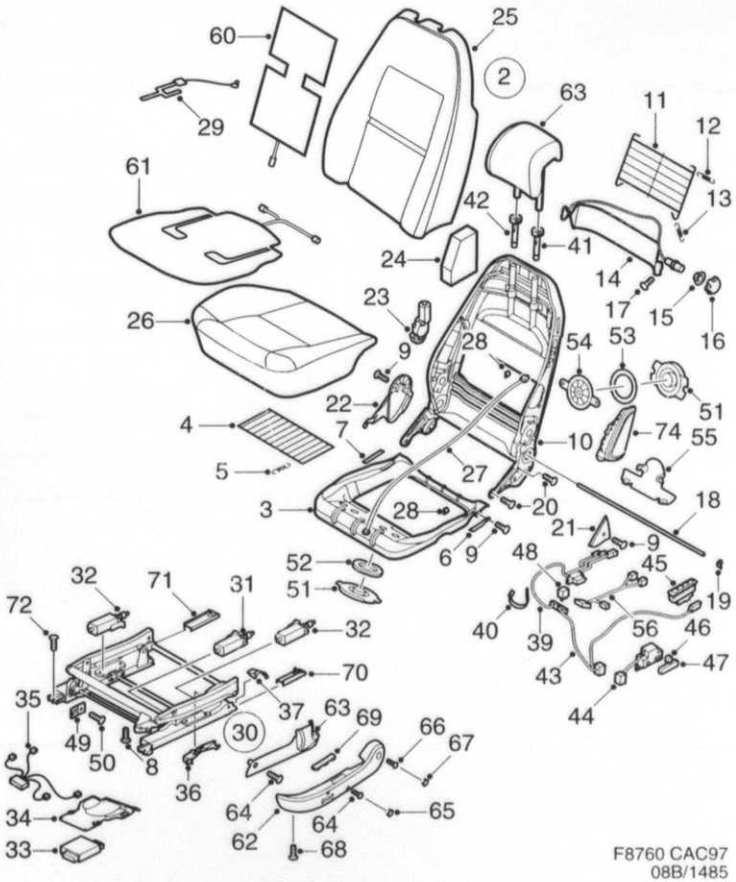

F8760 CAC97
08B/1485

1485	Pos	Part No/Art nr	K S	Notes/Anmärkningar	Qty/ Antal	Description	Benämning	S L
0010	2	49 35 516		LH, LHD	1	Framework	Stomme	
0020	2	49 35 532		42), LH, LHD	1	Framework	Stomme	
0030	2	48 42 001		39), RH, LHD	1	Framework	Stomme	
0040	2	48 42 027		39,42), RH, LHD	1	Framework	Stomme	
0050	2	49 30 798		38), RH, LHD	1	Framework	Stomme	
0060	2	49 30 814		38,42), RH, LHD	1	Framework	Stomme	
0070	2	48 42 019		39), LH, RHD	1	Framework	Stomme	
0080	2	48 42 035		39,42), LH, RHD	1	Framework	Stomme	
0090	2	49 30 806		38), LH, RHD	1	Framework	Stomme	
0100	2	49 30 822		38,42), LH, RHD	1	Framework	Stomme	
0110	2	49 35 524		RH, RHD	1	Framework	Stomme	
0120	2	49 35 540		42), RH, RHD	1	Framework	Stomme	
0130	2	48 41 961		29), LH, LHD	1	Framework	Stomme	
0140	2	48 41 987		29,42), LH, LHD	1	Framework	Stomme	
0150	2	48 41 979		29), RH, RHD	1	Framework	Stomme	
0160	2	48 41 995		29,42), RH, RHD	1	Framework	Stomme	
0170	3	46 58 589			1	.Seat pan	.Sitsplåt	
0180	3	50 25 275		42)	1	.Seat pan	.Sitsplåt	
0190	4	46 54 463			1	.Wire matting	.Resårmatta	
0200	5	46 54 471			8	.Spring	.Fjäder	
0210	6	46 54 448		LH	1	.Spacer	.Mellanlägg	
0220	7	46 54 455		RH	1	.Spacer	.Mellanlägg	
0230	8	44 96 626			2	.Screw	.Skruv	
0240	9	48 02 229			4	.Screw	.Skruv	
0250	10	49 35 441			1	.Backrest frame	.Ryggram	
0260	10	50 02 571		42)	1	.Backrest frame	.Ryggram	
0270	11	48 87 246			1	.Wire matting	.Resårmatta	
0280	11	49 33 057		42)	1	.Wire matting	.Resårmatta	
0290	12	46 54 570			2	.Spring	.Fjäder	
0300	12	48 02 922		42)	2	.Spring	.Fjäder	
0310	13	46 54 588			2	.Spring	.Fjäder	
0320	14	50 32 784		LH	1	.Lumbar support	.Svankstöd	
0330	14	50 32 792		RH	1	.Lumbar support	.Svankstöd	
0340	15	46 58 316			1	.Cover ring	.Täckring	
0350	16	46 54 406			1	.Hand wheel	.Ratt	
0360	17	79 22 347			2	.Screw	.Skruv	5
0370	18	46 57 185			1	.Shaft	.Axel	
0380	19	43 47 928			1	.Clamping ring	.Klämring	
0390	20	47 98 906			4	.Screw	.Skruv	
0400	21	48 45 897		LH	1	.Protecting casing	.Skyddskåpa	
0410	21	48 45 889		RH	1	.Protecting casing	.Skyddskåpa	
0420	22	49 37 975		LH	1	.Cover	.Kåpa	
0430	22	49 37 983		RH	1	.Cover	.Kåpa	
0440	23	46 57 193		LH	1	.Electric motor	.Elmotor	
0450	23	46 57 201		RH	1	.Electric motor	.Elmotor	
0460	23	46 57 235		29), LH	1	.Electric motor	.Elmotor	
0470	23	46 57 243		29), RH	1	.Electric motor	.Elmotor	
0480	24	50 05 723			1	.Dummy	.Attrapp	
0490	25	48 00 017			1	.Foam plastic cushion	.Skumplastdyna	
0500	25	46 58 324		42)	1	.Foam plastic cushion	.Skumplastdyna	
0510	26	46 54 414			1	.Foam plastic cushion	.Skumplastdyna	
0520	26	46 58 241		42)	1	.Foam plastic cushion	.Skumplastdyna	
0530	27	48 46 820			1	.Cable harness	.Ledningsnät	
0540	28	71 08 491			4	.Clamp	.Klammer	5
0550	29	46 54 984		34)	1	.Contact	.Kontakt	
0560	30	46 58 415		LH	1	.Seat chassis	.Stolchassi	
0570	30	50 32 909		42), LH	1	.Seat chassis	.Stolchassi	
0580	30	46 58 423		RH	1	.Seat chassis	.Stolchassi	

29. With memory function. Med minnesfunktion.
34. Passanger seat Passagerarstol
38. Without child seat bracket. Utan barnstolsfäste.
39. With child seat bracket. Med barnstolsfäste.
42. With seat ventilation Med stolventilation

MASTER INDEX

0	General	1-A02
2	Engine	1-C02
3A	Electrical systems, instruments	1-F02
4	Transmission	1-I02
5	Brakes	1-K02
6	Front assembly, Steering	1-L02
7	Suspension, Wheels	2-A02
8A	Body, external	2-B02
8B	Body, internal	2-F02
8C	Body, heating and ventilation	2-H02
8D	Tool, Labels	2-I02
9	Accessories	2-J02
10	Numerical register	3-A02

8B GROUP INDEX

Instrument panel	2-F06
Upholstery	2-F12
Other interior equipment	2-G06

Other interior equipment

2-G12 Seat Electrically adjustable

Övrig invändig utrustning

Stol Elmanövrerade

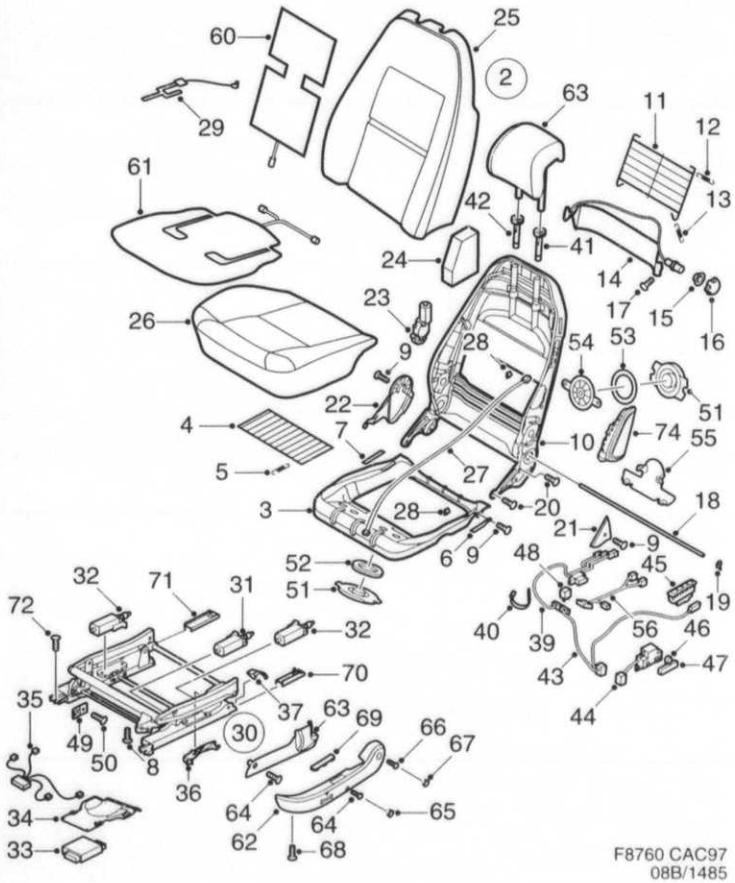

F8760 CAC97
08B/1485

1485	Pos	Part No/Art nr	K S	Notes/Anmärkningar	Qty/ Antal	Description	Benämning	S L
0590	30	50 32 917		42), RH	1	.Seat chassis	.Stolchassi	
0600	30	46 58 399		29), LH	1	.Seat chassis	.Stolchassi	
0610	30	50 32 883		29,42), LH	1	.Seat chassis	.Stolchassi	
0620	30	46 58 407		29), RH	1	.Seat chassis	.Stolchassi	
0630	30	50 32 891		29,42), RH	1	.Seat chassis	.Stolchassi	
0640	31	46 58 498		LH	1	..Electric motor	..Elmotor	6
0650	31	50 05 855		RH	1	..Electric motor	..Elmotor	6
0660	31	46 58 464		29), LH	1	..Electric motor	..Elmotor	6
0670	31	50 05 830		29), RH	1	..Electric motor	..Elmotor	6
0680	32	46 58 506		LH	2	..Electric motor	..Elmotor	6
0690	32	50 05 863		RH	2	..Electric motor	..Elmotor	6
0700	32	46 58 472		29), LH	2	..Electric motor	..Elmotor	6
0710	32	50 05 848		29), RH	2	..Electric motor	..Elmotor	6
0720	33	46 58 480		29)	1	..Electronic unit	..Elektronikenhet	
0730	34	48 00 439		LH	1	..Bracket	..Konsol	6
0740	34	48 01 296		RH	1	..Bracket	..Konsol	6
0750	34	50 06 689		42)	1	..Bracket	..Konsol	6
0760	35	50 07 208		LH	1	..Cable harness	..Ledningsnät	
0770	35	50 07 224		RH	1	..Cable harness	..Ledningsnät	
0780	35	50 07 190		29), LH	1	..Cable harness	..Ledningsnät	
0790	35	50 07 216		29), RH	1	..Cable harness	..Ledningsnät	
0800	36	49 30 699		LH	1	..Cover	..Täckkåpa	
0810	36	49 30 707		RH	1	..Cover	..Täckkåpa	
0820	37	50 05 814		LH	1	..Cover	..Avtäckning	
0830	37	50 05 822		RH	1	..Cover	..Avtäckning	
0840	39	48 46 861			1	.Cable harness	.Ledningsnät	
0850	39	48 46 853		29)	1	.Cable harness	.Ledningsnät	
0860	40	79 71 872			3	.Tensioning band	.Spännband	5
0870	41	48 00 058		LH	1	.Sleeve	.Hylsa	
0880	42	48 00 041		RH	1	.Sleeve	.Hylsa	
0890	43	46 53 721		29)	1	.Extension cable	.Anslutningskabel	6
0900	44	48 47 067		LH	1	.Switch	.Strömställare	
0910	44	48 47 075		RH	1	.Switch	.Strömställare	
0920	44	46 53 796		29), LH	1	.Switch	.Strömställare	
0930	44	46 53 804		29), RH	1	.Switch	.Strömställare	
0940	45	40 69 704		29)	1	.Switch	.Strömställare	5
0950	46	95 65 003			1	.Button	.Knapp	5
0960	47	95 65 011			1	.Button	.Knapp	5
0970	48	85 33 176			1	.Relay	.Relä	3
0980	49	49 35 847			2	.Child seat mounting	.Barnstolsinfästning	
0990	50	50 26 877			2	.Screw	.Skruv	
1000	51	46 58 514		42)	2	.Fan	.Fläkt	
1010	52	50 25 317		42)	1	.Gasket	.Packning	
1020	53	50 25 309		42)	1	.Gasket	.Packning	
1030	54	46 58 548		42)	1	.Protecting plate	.Skyddsplåt	
1040	55	50 06 697		42)	1	.Bracket	.Konsol	
1050	56	48 46 812		42)	1	.Cable harness	.Ledningsnät	
1060	60	47 18 524			2	Heating pad	Värmedyna	
1070	60	49 36 456		42)	2	Heating pad	Värmedyna	
1080	61	49 36 431			2	Heating pad	Värmedyna	
1090	61	49 36 415		42)	2	Heating pad	Värmedyna	
1100	62	48 46 036		30), LH	1	Cover	Kåpa	
1110	62	48 46 044		40), LH	1	Cover	Kåpa	
1120	62	48 46 051		30), RH	1	Cover	Kåpa	
1130	62	48 46 069		40), RH	1	Cover	Kåpa	
1140	62	48 46 077		30,29), LH	1	Cover	Kåpa	
1150	62	48 46 085		40,29), LH	1	Cover	Kåpa	
1160	62	48 46 093		30,29), RH	1	Cover	Kåpa	
1170	62	48 46 101		40,29), RH	1	Cover	Kåpa	

29. With memory function. Med minnesfunktion.
30. Light beige Ljus beige
40. Grey Grå
42. With seat ventilation Med stolventilation

MASTER INDEX

0	General	1-A02
2	Engine	1-C02
3A	Electrical systems, instruments	1-F02
4	Transmission	1-I02
5	Brakes	1-K02
6	Front assembly, Steering	1-L02
7	Suspension, Wheels	2-A02
8A	Body, external	2-B02
8B	Body, internal	2-F02
8C	Body, heating and ventilation	2-H02
8D	Tool, Labels	2-I02
9	Accessories	2-J02
10	Numerical register	3-A02

8B GROUP INDEX

Instrument panel	2-F06
Upholstery	2-F12
Other interior equipment	2-G06

2-G14 Seat Electrically adjustable / Stol Elmanövrerade

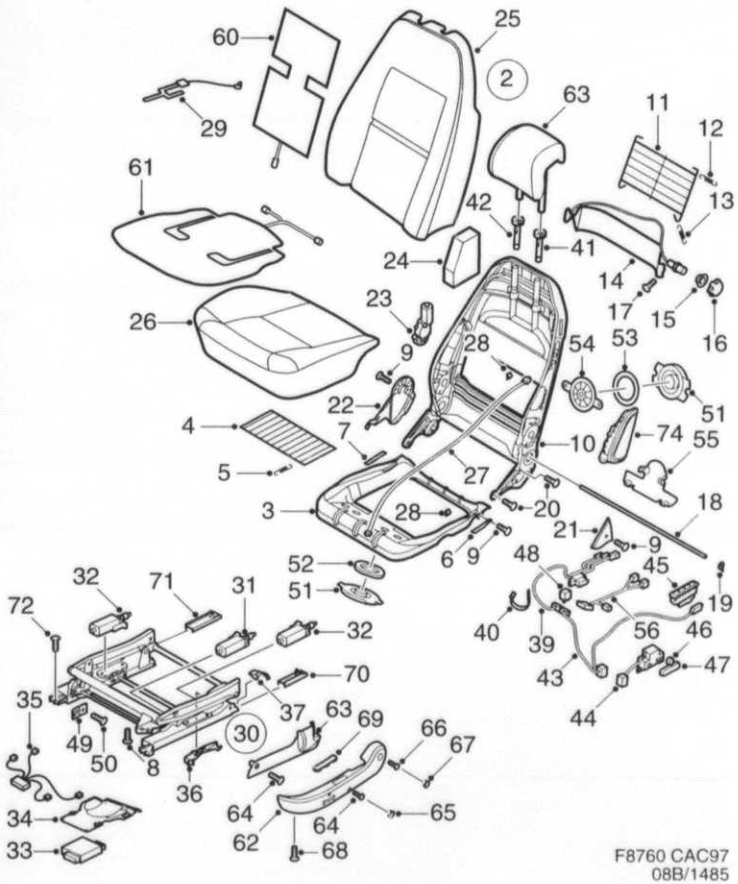

F8760 CAC97
08B/1485

1485	Pos	Part No/Art nr	K S	Notes/Anmärkningar	Qty/ Antal	Description	Benämning	S L
1180	63	48 46 150		30), LH	1	Cover	Kåpa	
1190	63	48 46 168		40), LH	1	Cover	Kåpa	
1200	63	48 46 176		30), RH	1	Cover	Kåpa	
1210	63	48 46 184		40), RH	1	Cover	Kåpa	
1220	64	79 22 347			6	Screw	Skruv	5
1230	65	48 46 275		30)	2	Cover	Täcklock	
1240	65	48 46 283		40)	2	Cover	Täcklock	
1250	66	40 30 359			2	Screw	Skruv	5
1260	67	48 46 234		30), LH	1	Cover	Täcklock	
1270	67	48 46 242		40), LH	1	Cover	Täcklock	
1280	67	48 46 259		30), RH	1	Cover	Täcklock	
1290	67	48 46 267		40), RH	1	Cover	Täcklock	
1300	68	79 72 938			2	Screw	Skruv	5
1310	69	49 31 101			2	Clamp	Klämma	
1320	70	50 01 979		35,2), LH	1	Cover	Avtäckning	
1330	70	50 01 987		35,2), RH	1	Cover	Avtäckning	
1333	70	47 16 635		35,3), LH	1	Cover	Avtäckning	
1336	70	47 16 643		35,3), RH	1	Cover	Avtäckning	
1340	71	50 01 953		36,2), LH	1	Cover	Avtäckning	
1350	71	50 01 961		36,2), RH	1	Cover	Avtäckning	
1353	71	47 16 676		36,3), LH	1	Cover	Avtäckning	
1356	71	47 16 684		36,3), RH	1	Cover	Avtäckning	
1360	72	46 85 988			4	Screw	Skruv	
1370	73			1)		Head restraint	Nackstöd	
1380				See page 8B-015, 2-F16				
1390	74			See page 6-007, 1-L08		Airbag module	Airbagmodul	

1. Not as separate spare part. Ej som separat reservdel.
2. Front. Främre.
3. Rear. Bakre.
30. Light beige Ljus beige
35. Outer Yttre
36. Inner Inre
40. Grey Grå

MASTER INDEX

0	General	1-A02
2	Engine	1-C02
3A	Electrical systems, instruments	1-F02
4	Transmission	1-I02
5	Brakes	1-K02
6	Front assembly, Steering	1-L02
7	Suspension, Wheels	2-A02
8A	Body, external	2-B02
8B	Body, internal	2-F02
8C	Body, heating and ventilation	2-H02
8D	Tool, Labels	2-I02
9	Accessories	2-J02
10	Numerical register	3-A02

8B GROUP INDEX

Instrument panel	2-F06
Upholstery	2-F12
Other interior equipment	2-G06

2-G16

Rear seat

Baksäte

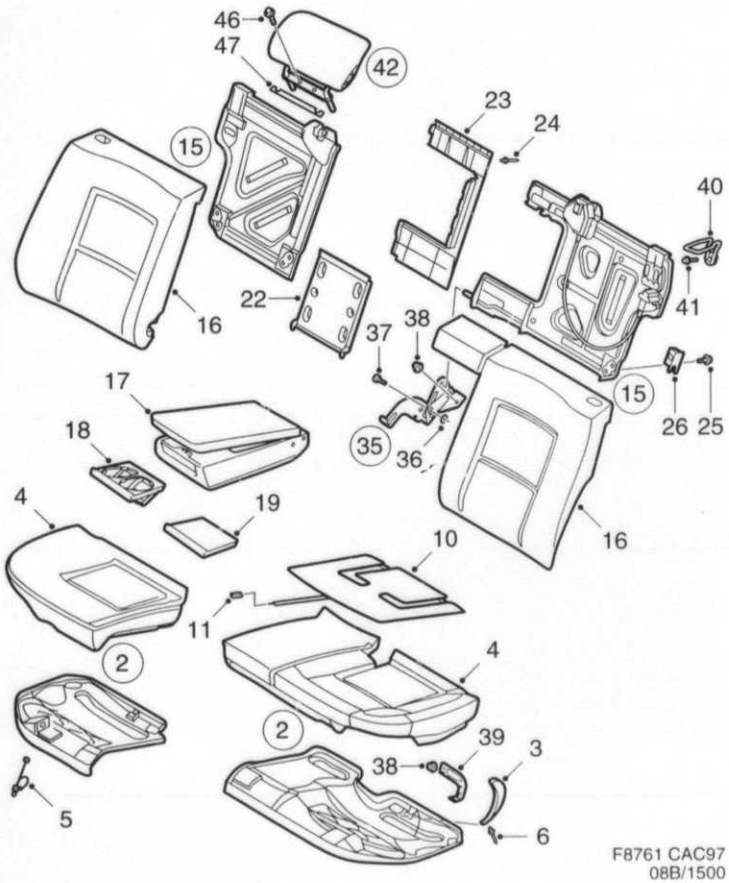

F8761 CAC97
08B/1500

1500	Pos	Part No/Art nr	K S	Notes/Anmärkningar	Qty/ Antal	Description	Benämning	S L
0010	2	46 56 625		LH	1	Seat cushion	Sittdyna	
0020	2	46 56 658		RH	1	Seat cushion	Sittdyna	
0030	3	46 56 070			1	.Lifting strap	.Lyftstropp	
0040	4	46 55 627		LH	1	.Foam plastic cushion	.Skumplastdyna	
0050	4	46 55 635		RH	1	.Foam plastic cushion	.Skumplastdyna	
0060	5	46 56 484			1	.Cable clip	.Kabelklips	
0070	6	47 16 346			1	.Rivet	.Nit	3
0100	10	46 56 641			2	Heating pad	Värmedyna	4
0110	11	44 10 528			2	Contact housing	Kontakthus	
0150	15	46 55 676		LH	1	Backrest cushion	Ryggdyna	
0155	15	49 33 503		31), LH	1	Backrest cushion	Ryggdyna	
0160	15	46 55 684		RH	1	Backrest cushion	Ryggdyna	
0170	16	46 55 601		LH	1	.Foam plastic cushion	.Skumplastdyna	
0180	16	46 55 619		RH	1	.Foam plastic cushion	.Skumplastdyna	
0190	17	48 01 254		27,28)	1	.Arm rest	.Armstöd	
0200	18	48 01 411			1	.Cup holder	.Mugghållare	
0210	19	48 00 025		31)	1	.Cover	.Täcklock	
0230	22	48 01 247			1	.Hatch	.Lucka	
0240	23	48 04 076			1	.Frame	.Ram	
0250	24	46 85 822			9	.Blind rivet	.Blindnit	
0260	25	80 59 776			X	.Screw	.Skruv	5
0270	26	46 56 104		LH	1	.Hinge fitting	.Gångjärnsbeslag	
0280	26	46 56 112		RH	1	.Hinge fitting	.Gångjärnsbeslag	
0350	35	47 17 070			1	Joint	Led	
0360	36	46 85 491			2	.Washer	.Bricka	
0370	37	79 82 986			2	.Screw	.Skruv	5
0380	38	79 77 952			2	Hexagon nut	Sexkantsmutter	5
0390	39	47 17 088			1	Hook	Krok	
0400	40	50 31 257		LH	1	Lock brace	Låsbygel	
0410	40	50 31 265		RH	1	Lock brace	Låsbygel	
0420	41	46 85 723			2	Screw	Skruv	
0430	42	48 42 332			2	Head restraint	Nackskydd	
0480	46	79 78 455			2	Screw	Skruv	5
0490	47			See page 8B-043, 2-G20		Cover	Avtäckning	

27. State trim colour Uppge klädselkod
28. With upholstery Med klädsel
31. Without cup holder Utan mugghållare

MASTER INDEX

0	General	1-A02
2	Engine	1-C02
3A	Electrical systems, instruments	1-F02
4	Transmission	1-I02
5	Brakes	1-K02
6	Front assembly, Steering	1-L02
7	Suspension, Wheels	2-A02
8A	Body, external	2-B02
8B	Body, internal	2-F02
8C	Body, heating and ventilation	2-H02
8D	Tool, Labels	2-I02
9	Accessories	2-J02
10	Numerical register	3-A02

8B GROUP INDEX

Instrument panel	2-F06
Upholstery	2-F12
Other interior equipment	2-G06

2-G18 Equip. luggage compart. Other interior equipment / Utrustning bagagerum Övrig invändig utrustning

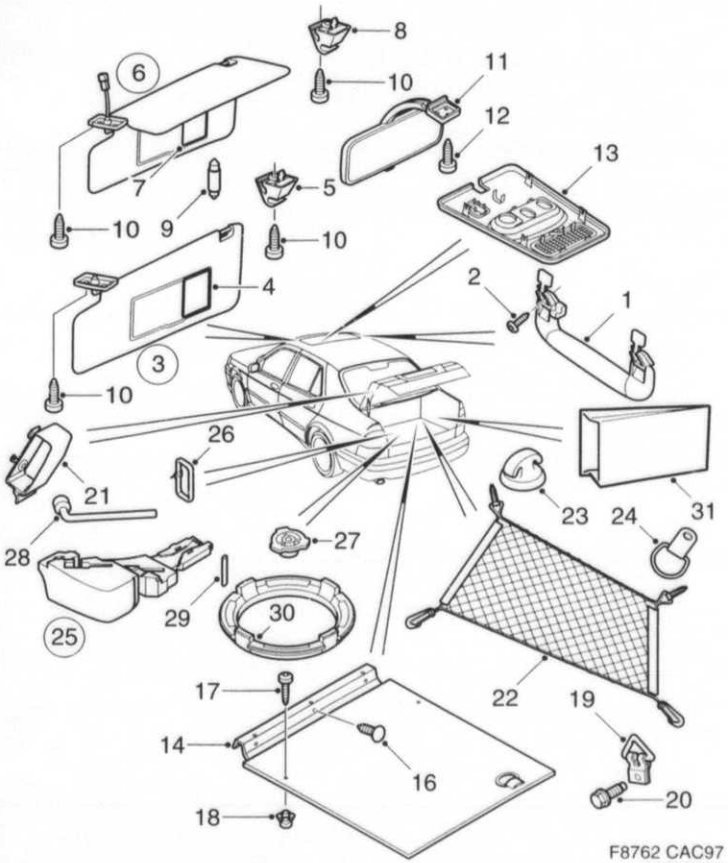

F8762 CAC97
08B/1600

1600	Pos	Part No/Art nr	K S	Notes/Anmärkningar	Qty/ Antal	Description	Benämning	S L
0010	1	46 03 395			4	Curve handle	Kurvhandtag	
0020	2	79 77 002			8	Screw	Skruv	5
0030	3	46 44 134		LH	1	Sun visor	Solskydd	5
0040	3	46 44 142		RH	1	Sun visor	Solskydd	5
0050	3	43 69 039		LH, US, CA	1	Sun visor	Solskydd	5
0060	3	43 69 021		RH, US, CA	1	Sun visor	Solskydd	5
0070	4			See page 8D-009, 2-I10	2	.Label	.Etikett	
0080				US, CA				
0090	5	46 83 165			1	.Holder	.Hållare	6
0100	6	46 03 429		LH	1	Sun visor	Solskydd	5
0110	6	46 03 437		RH	1	Sun visor	Solskydd	5
0120	6	43 69 062		LH, US, CA	1	Sun visor	Solskydd	5
0130	6	43 69 047		RH, US, CA	1	Sun visor	Solskydd	5
0140	7			See page 8D-009, 2-I10	1	.Label	.Etikett	
0150				US, CA				
0160	8	46 03 411			1	.Holder	.Hållare	6
0170	9			See page 3A-023, 1-F24	1	.Bulb	.Glödlampa	
0180	10	79 22 370			6	Screw	Skruv	5
0190	11	49 36 084			1	Rear view mirror	Backspegel	4
0200	12	79 75 329			3	.Screw	.Skruv	5
0210	13			See page 3A-023, 1-F24		Cover	Kåpa	
0220	14	45 12 828			1	Load floor	Lastgolv	5
0230	16	96 68 153			6	Clip	Clips	5
0240	17	79 75 337			2	Screw	Skruv	5
0250	18	79 82 929			2	Press nut	Pressmutter	3
0260	19	46 83 850			2	Eye	Ögla	6
0270	20	79 78 265			2	Hexagon screw	Sexkantsskruv	5
0280	21	46 06 984			2	Strap	Låsband	5
0290	22	46 06 992			1	Luggage net	Bagagenät	
0300	23	48 24 959			1	Anchor	Ankare	
0310	24	48 22 417			1	Ring	Ring	
0320	25	45 12 869			1	F..am plastic piece	Skumplastbit	
0330	26	41 41 784			1	.Strap	.Låsband	5
0340	27	97 74 290			1	Knob	Vred	5
0350	28			See page 8D-005, 2-I06		Socket wrench	Hylsnyckel	
0360	29	48 67 917			1	Edge protection moulding	Kantskyddslist	5
0370	30	48 85 646			1	Spacer ring	Distansring	5
0380	31	94 59 728			1	Bag	Påse	6

MASTER INDEX

0	General	1-A02
2	Engine	1-C02
3A	Electrical systems, instruments	1-F02
4	Transmission	1-I02
5	Brakes	1-K02
6	Front assembly, Steering	1-L02
7	Suspension, Wheels	2-A02
8A	Body, external	2-B02
8B	Body, internal	2-F02
8C	Body, heating and ventilation	2-H02
8D	Tool, Labels	2-I02
9	Accessories	2-J02
10	Numerical register	3-A02

8B GROUP INDEX

Instrument panel	2-F06
Upholstery	2-F12
Other interior equipment	2-G06

2-G20

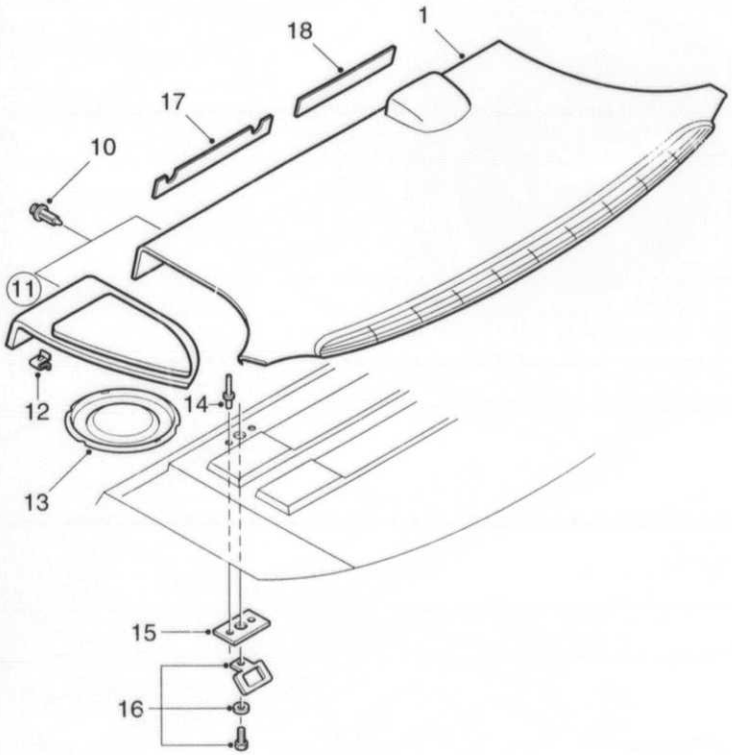

F8763 CAC97
08B/1625

1625	Pos	Part No/Art nr	K S	Notes/Anmärkningar	Qty/ Antal	Description	Benämning	S L
0010	1	45 12 760		30)	1	Rear shelf	Hatthylla	5
0020	1	45 12 745		40)	1	Rear shelf	Hatthylla	5
0100	10	46 81 565			5	Rivet	Nit	
0110	11	47 44 108		30), LH	1	Loudspeaker grille	Högtalargaller	5
0120	11	47 44 124		30), RH	1	Loudspeaker grille	Högtalargaller	5
0122	11	50 07 703		30),LH,"HARMAN/KARDON"	1	Loudspeaker grille	Högtalargaller	
0124	11	50 07 711		30),RH,"HARMAN/KARDON"	1	Loudspeaker grille	Högtalargaller	
0130	11	47 44 090		40), LH	1	Loudspeaker grille	Högtalargaller	5
0140	11	47 44 116		40), RH	1	Loudspeaker grille	Högtalargaller	5
0142	11	50 07 646		40),LH,"HARMAN/KARDON"	1	Loudspeaker grille	Högtalargaller	
0144	11	50 07 653		40),RH,"HARMAN/KARDON"	1	Loudspeaker grille	Högtalargaller	
0150	12	43 88 757			2	,Clamp	,Klämma	6
0160	13	45 12 810			2	Plate	Platta	
0170						only cars without	endast bilar utan	
0180						loudspeaker	högtalare	
0190	14	79 72 490		AU, CA	6	Rivet	Nit	5
0200	15	96 53 502		AU, CA	3	Nut plate	Mutterplatta	5
0210	16	50 12 331		AU	1	Child seat mounting	Barnstolsinfästning	
0220	16	45 05 269		CA	1	Attaching washer	Fästbricka	
0230	17	48 88 566		30)	2	Cover	Avtäckning	
0240	17	48 88 533		40)	2	Cover	Avtäckning	
0250	18	48 88 558		30)	1	Cover	Avtäckning	
0260	18	48 88 541		40)	1	Cover	Avtäckning	

30. Light beige Ljus beige
40. Grey Grå

MASTER INDEX

0	General	1-A02
2	Engine	1-C02
3A	Electrical systems, instruments	1-F02
4	Transmission	1-I02
5	Brakes	1-K02
6	Front assembly, Steering	1-L02
7	Suspension, Wheels	2-A02
8A	Body, external	2-B02
8B	Body, internal	2-F02
8C	Body, heating and ventilation	2-H02
8D	Tool, Labels	2-I02
9	Accessories	2-J02
10	Numerical register	3-A02

8B GROUP INDEX

Instrument panel	2-F06
Upholstery	2-F12
Other interior equipment	2-G06

2-G22 Safety belt, front seat / Bilbälte framsäte

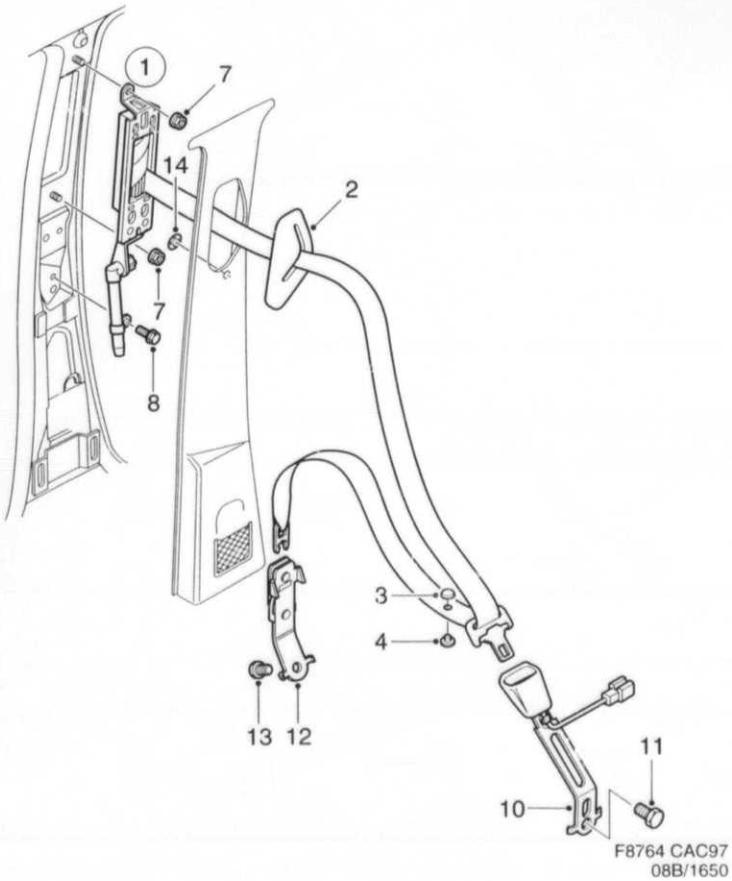

1650	Pos	Part No/Art nr	K S	Notes/Anmärkningar	Qty/ Antal	Description	Benämning	S L
0010	1	48 42 795		30), LH	1	Seat belt	Bilbälte	
0020	1	48 42 811		30), RH	1	Seat belt	Bilbälte	
0030	1	48 42 767		40), LH	1	Seat belt	Bilbälte	
0040	1	48 42 803		40), RH	1	Seat belt	Bilbälte	
0050	2	46 53 531		30), LH	1	.Grommet	.Genomföring	
0060	2	46 53 564		30), RH	1	.Grommet	.Genomföring	
0070	2	46 53 523		40), LH	1	.Grommet	.Genomföring	
0080	2	46 53 556		40), RH	1	.Grommet	.Genomföring	
0090	3	96 17 846			1	.Button	.Knapp	5
0100	4	96 17 853			1	.Button	.Knapp	5
0110	7	46 85 665			4	Flange lock nut	Flänslåsmutter	
0120	8	79 78 653			2	Screw	Skruv	5
0130	10	45 32 412			2	Buckle	Bilbälteslås	5
0140	11	84 99 204			2	Screw	Skruv	5
0150	12	47 16 841			2	End fitting	Ändbeslag	
0160	13	95 86 827			2	Screw	Skruv	5
0170	14	49 40 565			4	Lock washer	Spärrbricka	

30. Light beige Ljus beige
40. Grey Grå

MASTER INDEX

0	General	1-A02
2	Engine	1-C02
3A	Electrical systems, instruments	1-F02
4	Transmission	1-I02
5	Brakes	1-K02
6	Front assembly, Steering	1-L02
7	Suspension, Wheels	2-A02
8A	Body, external	2-B02
8B	Body, internal	2-F02
8C	Body, heating and ventilation	2-H02
8D	Tool, Labels	2-I02
9	Accessories	2-J02
10	Numerical register	3-A02

8B GROUP INDEX

Instrument panel	2-F06
Upholstery	2-F12
Other interior equipment	2-G06

2-G24

Safety belt, rear seat

Bilbälte, baksäte

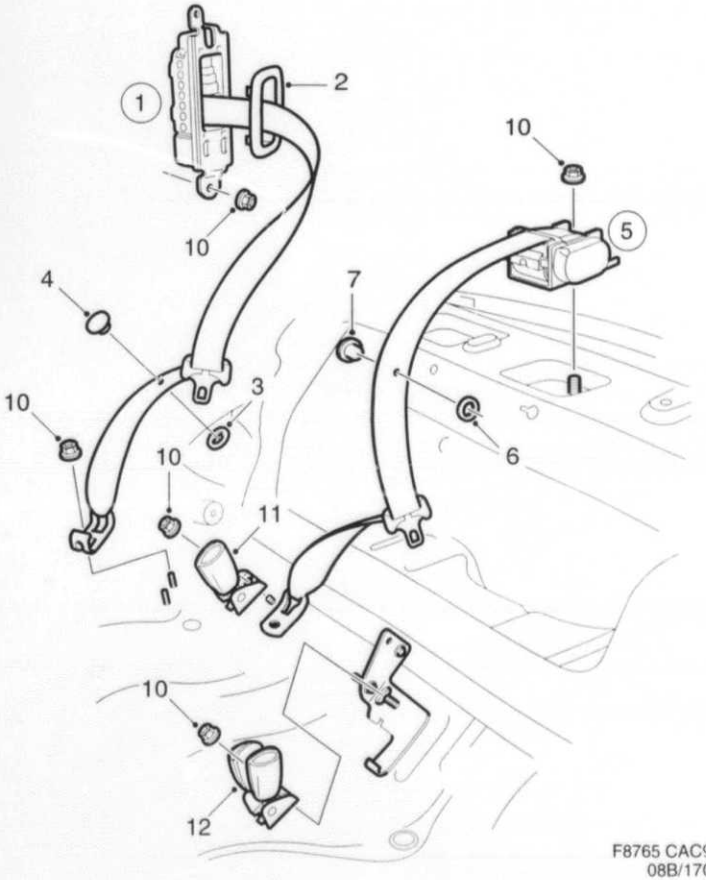

F8765 CAC97
08B/1700

1700	Pos	Part No/Art nr	K S	Notes/Anmärkningar	Qty/ Antal	Description	Benämning	S L
0010	1	48 42 829		LH	1	Seat belt	Bilbälte	5
0020	1	48 42 845		RH	1	Seat belt	Bilbälte	5
0030	2			1)	1	.Grommet	.Genomföring	
0040	3	96 17 846			1	.Button	.Knapp	5
0050	4	96 17 853			1	.Button	.Knapp	5
0060	5	48 42 837			1	Seat belt	Bilbälte	
0070	6	96 17 846			1	.Button	.Knapp	5
0080	7	96 17 853			1	.Button	.Knapp	5
0090	10	46 85 665			9	Flange lock nut	Flänslåsmutter	
0100	11	45 31 877			1	Buckle	Bilbälteslås	
0110	12	45 31 885			1	Buckle	Bilbälteslås	

1. Not as separate spare part. Ej som separat reservdel.

MASTER INDEX

0	General	1-A02
2	Engine	1-C02
3A	Electrical systems, instruments	1-F02
4	Transmission	1-I02
5	Brakes	1-K02
6	Front assembly, Steering	1-L02
7	Suspension, Wheels	2-A02
8A	Body, external	2-B02
8B	Body, internal	2-F02
8C	Body, heating and ventilation	2-H02
8D	Tool, Labels	2-I02
9	Accessories	2-J02
10	Numerical register	3-A02

8B GROUP INDEX

Instrument panel	2-F06
Upholstery	2-F12
Other interior equipment	2-G06

8C

Body, heating and ventilation
Karosserie, värme- och ventilation
Carrocería, calefacción y ventilacion

0041

0010 TABLE OF CONTENTS

0020 **Heating and ventilation system**
0030 Control panel ..... 8C : 5 2-H06
0040 Air inlett, compartment ..... 8C : 7 2-H08
0050 Climate unit ..... 8C : 9 2-H10
0060 Draft channels ..... 8C : 13 2-H14
0070 AC compressor ..... 8C : 15 2-H16
0080 AC condenser ..... 8C : 17 2-H18

MASTER INDEX

0090 **0 General** 1-A02
0100 **2 Engine** 1-C02
3A Electrical systems, instruments 1-F02
4 Transmission 1-I02
5 Brakes 1-K02
6 Front assembly, Steering 1-L02
7 Suspension, Wheels 2-A02
8A Body, external 2-B02
8B Body, internal 2-F02
8C Body, heating and ventilation 2-H02
8D Tool, Labels 2-I02
9 Accessories 2-J02
10 Numerical register 3-A02

8C GROUP INDEX

Heating and ventilation system 2-H06

0042
0010
0020
0030
0040
0050
0060
0070
0080
0090
0100
0110
0120
0130
0140
0150
0160
0170
0180
0190
0200

INNEHÅLLSFÖRTECKNING

Värme- och ventilationssystem

Reglagepanel	8C : 5	2-H06
Luftintag, kupe	8C : 7	2-H08
Klimataggregat	8C : 9	2-H10
Fördelningskanaler	8C : 13	2-H14
AC kompressor	8C : 15	2-H16
AC kondensor	8C : 17	2-H18

SUMARIO

Sistema de calefaccion y ventilacion

Panel mando	8C : 5	2-H06
Toma aire, compartimento	8C : 7	2-H08
Unidad de climatizacion	8C : 9	2-H10
Canales de distribucion	8C : 13	2-H14
AC compresor	8C : 15	2-H16
AC condensador	8C : 17	2-H18

MASTER INDEX

0	General	1-A02
2	Engine	1-C02
3A	Electrical systems, instruments	1-F02
4	Transmission	1-I02
5	Brakes	1-K02
6	Front assembly, Steering	1-L02
7	Suspension, Wheels	2-A02
8A	Body, external	2-B02
8B	Body, internal	2-F02
8C	Body, heating and ventilation	2-H02
8D	Tool, Labels	2-I02
9	Accessories	2-J02
10	Numerical register	3-A02

8C GROUP INDEX

Heating and ventilation system	2-H06

2 -H06

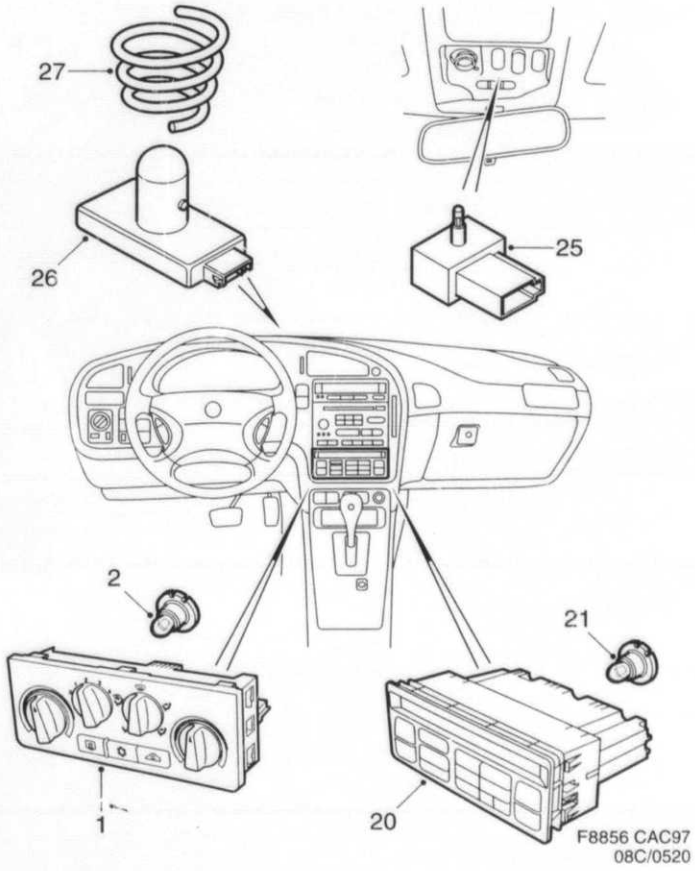

0520	Pos	Part No/Art nr	K S	Notes/Anmärkningar	Qty/ Antal	Description	Benämning	S L
0010	1	48 68 485			1	Control panel	Reglagepanel	5
0020	1	48 68 493		AC	1	Control panel	Reglagepanel	5
0030	2	48 68 725			3	.Bulb	.Glödlampa	4
0040								
0050	20	48 68 501		ACC	1	Control panel	Reglagepanel	5
0060	21	48 68 725			8	.Bulb	.Glödlampa	4
0070								
0080	25	45 41 686			1	Sensor indoor temperature	Givare innerlufttemperatur	4
0090								
0100	26	45 41 124			1	Solar sensor	Solsensor	4
0110	27	96 30 252			1	Spring	Fjäder	5
0120				See page 8B-005, 2-F06		Cover	Täcklock	

MASTER INDEX

0	General	1-A02
2	Engine	1-C02
3A	Electrical systems, instruments	1-F02
4	Transmission	1-I02
5	Brakes	1-K02
6	Front assembly, Steering	1-L02
7	Suspension, Wheels	2-A02
8A	Body, external	2-B02
8B	Body, internal	2-F02
8C	Body, heating and ventilation	2-H02
8D	Tool, Labels	2-I02
9	Accessories	2-J02
10	Numerical register	3-A02

8C GROUP INDEX

Heating and ventilation system	2-H06

2 -H08 Air inlet, compartment / Luftintag, kupe

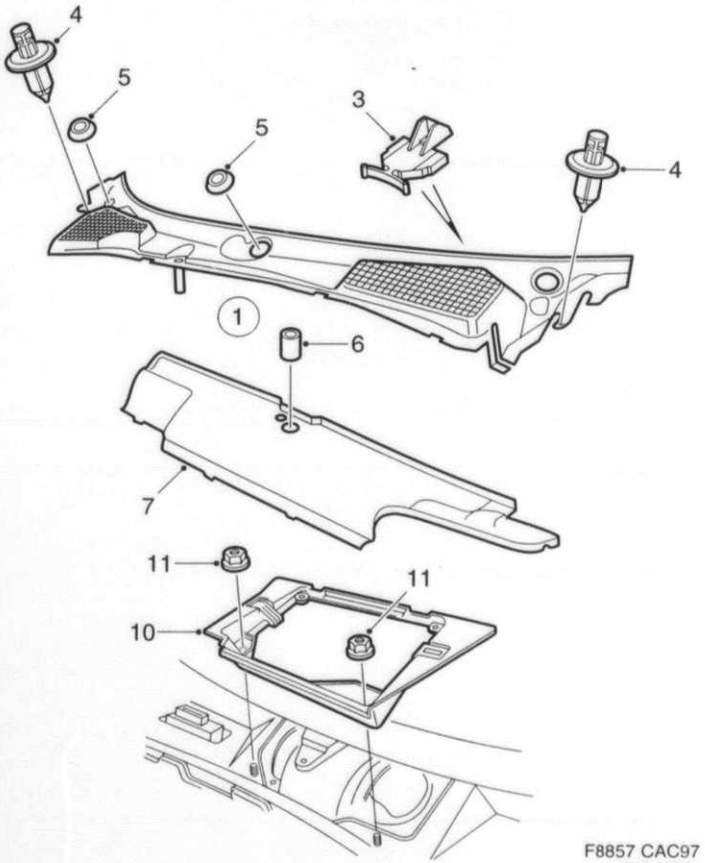

F8857 CAC97
08C/0700

0700	Pos	Part No/Art nr	K S	Notes/Anmärkningar	Qty/ Antal	Description	Benämning	S L
0010	1	45 60 314		LHD	1	Screen	Avskärmning	5
0020	1	45 61 148		RHD	1	Screen	Avskärmning	
0030	3	45 63 409			6	.Bracket	.Hållare	
0040								
0050	4	46 81 565			2	Rivet	Nit	
0060	5	45 62 252			2	Rubber bellows	Gummibälg	
0070	6	48 32 291			1	Draining hose	Dräneringsslang	
0080	7	45 61 411			1	Water drainage	Vattenavledare	
0090								
0100	10	45 41 587			1	Water drainage	Vattenavledare	5
0110	11	40 87 664			2	Nut	Mutter	5

MASTER INDEX

0	General	1-A02
2	Engine	1-C02
3A	Electrical systems, instruments	1-F02
4	Transmission	1-I02
5	Brakes	1-K02
6	Front assembly, Steering	1-L02
7	Suspension, Wheels	2-A02
8A	Body, external	2-B02
8B	Body, internal	2-F02
8C	Body, heating and ventilation	2-H02
8D	Tool, Labels	2-I02
9	Accessories	2-J02
10	Numerical register	3-A02

8C GROUP INDEX

Heating and ventilation system	2-H06

2-H10

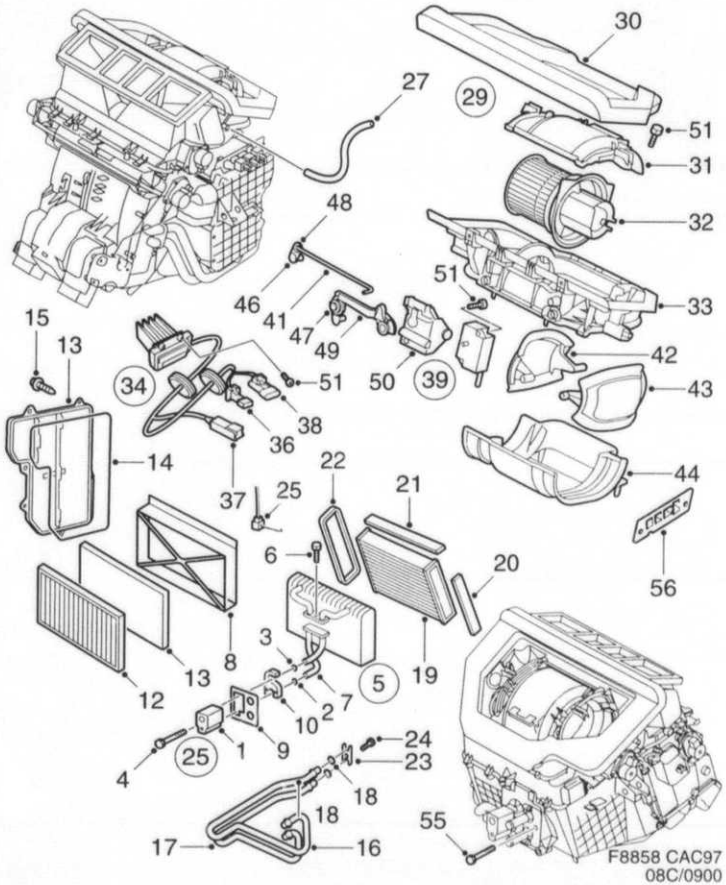

0900	Pcs	Part No/Art nr	KS	Notes/Anmärkningar	Qty/Antal	Description	Benämning	SL
0010	1	46 33 681		AC/ACC	1	Expansion valve	Expansionsventil	5
0020	2	48 69 020		AC/ACC	1	O-ring	O-ring	2
0030	3	48 69 129		AC/ACC	1	O-ring	O-ring	2
0040	4	47 57 563		AC/ACC	2	Screw	Skruv	5
0050	5	74 95 658		LHD, AC/ACC	1	Evaporator	Förångare	5
0060	5	74 95 690		RHD, AC/ACC	1	Evaporator	Förångare	5
0070	6	74 95 997		AC/ACC	1	.Screw	.Skruv	5
0080	7			1)	1	.Pipe set	.Rörsats	
0090	8	47 56 821			1	.Filter retainer	.Filterhållare	6
0095	9	48 69 285			1	Rubber bellows	Gummibälg	
0097	9	47 57 159		AC/ACC	1	Rubber bellows	Gummibälg	
0100	10	47 57 555			1	Washer	Bricka	5
0110	11	45 41 546			1	Compartment filter	Kupefilter	2
0120	12	47 56 946		40/400107637	1	Compartment filter	Kupefilter	
0130						carbon	kol	
0140	13	46 33 657		LHD	1	Cover	Lock	5
0150	13	46 33 665		RHD	1	Cover	Lock	5
0160	14	47 56 136			1	Seal	Tätning	4
0170	15	46 33 848			X	Screw	Skruv	5
0180	16	46 33 798		LHD	1	Tube	Rör	5
0190	16	46 33 814		RHD	1	Tube	Rör	5
0200	17	46 33 806		LHD	1	Tube	Rör	5
0210	17	46 33 822		RHD	1	Tube	Rör	5
0220	18	48 69 087			2	O-ring	O-ring	2
0230	19	45 41 611			1	Heat exchanger	Värmeväxlare	4
0231	20	47 57 498			1	Seal	Tätning	5
0232	21	47 57 506			1	Seal	Tätning	5
0233	22	47 57 514			1	Seal	Tätning	5
0250	23	47 56 060			1	Washer	Bricka	5
0260	24	47 56 078			1	Screw	Skruv	5
0270	25	45 41 306			1	Thermo contact	Termokontakt	4
0280	27	45 42 148		AC/ACC	1	Duct	Kanal	6
0300	29	45 41 645		1), LHD	1	Fan unit	Fläktenhet	5
0310	29	47 56 045		1), RHD	1	Fan unit	Fläktenhet	5
0320	30			1)	1	.Seal	.Tätning	
0330	31	46 33 707			1	.Cover	.Kåpa	6
0340	32	46 35 462			1	.Fan	.Fläkt	4
0390	33			1)	1	.Fan housing	.Fläkthus	
0400	34	46 32 931			1	.Control unit	.Reglerdon	5
0420	36	41 13 452			1	..Connector housing	..Kontakthus	4
0430	37	47 57 027			1	..Connector housing	..Kontakthus	
0440	38	41 13 650			1	..Connector housing	..Kontakthus	8
0450	39	45 41 629			1	.Electric motor	.Elmotor	5
0455						recirculation	recirkulation	
0460	41	46 35 470		1)	1	.Link arm	.Länkarm	5
0470	42			1), LH	1	.Shutter	.Spjäll	
0480	43			1), RH	1	.Shutter	.Spjäll	
0500	44			1)	1	.Fan housing	.Fläkthus	
0520	46	47 57 316		1), LH	1	.Link arm	.Länkarm	5
0530	47	47 57 324		1), RH	1	.Link arm	.Länkarm	5
0540	48	47 57 217		1)	1	.Clip	.Clips	5
0550	49	47 57 340		LHD	1	.Link arm	.Länkarm	5
0555	49	47 57 753		RHD	1	.Link arm	.Länkarm	5
0560	50	47 57 373		LHD	1	.Engine anchorage	.Motorfäste	6
0570	50	47 57 357		RHD	1	.Engine anchorage	.Motorfäste	6
0580	51	46 33 848			X	.Screw	.Skruv	5
0860	55	43 64 626			3	Screw	Skruv	5
0880	56	47 57 167		LHD	1	Bracket	Konsol	6
0890	56	47 57 886		RHD	1	Bracket	Konsol	6

1. Not as separate spare part. Ej som separat reservdel.

MASTER INDEX

0	General	1-A02
2	Engine	1-C02
3A	Electrical systems, instruments	1-F02
4	Transmission	1-I02
5	Brakes	1-K02
6	Front assembly, Steering	1-L02
7	Suspension, Wheels	2-A02
8A	Body, external	2-B02
8B	Body, internal	2-F02
8C	Body, heating and ventilation	2-H02
8D	Tool, Labels	2-I02
9	Accessories	2-J02
10	Numerical register	3-A02

8C GROUP INDEX

Heating and ventilation system	2-H06

2-H12 Climate unit Part 2

Klimataggregat Del 2

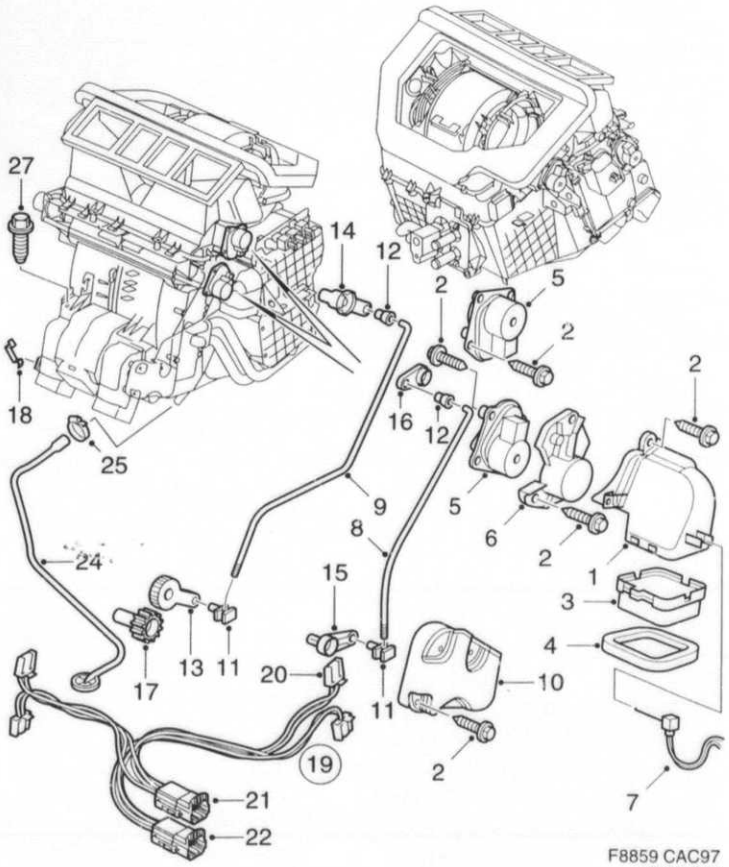

F8859 CAC97
08C/0950

0950	Pos	Part No/Art nr	K S	Notes/Anmärkningar	Qty/ Antal	Descr-ption	Benämning	S L
0620	1	47 56 268		LH, LHD	1	Outlet	Utlopp	6
0630	1	47 56 276		RH, LHD	1	Outlet	Utlopp	6
0633	1	47 57 183		LH, RHD	1	Outlet	Utlopp	6
0636	1	47 57 191		RH, RHD	1	Outlet	Utlopp	6
0637	2	46 33 848			X	Screw	Skruv	5
0640	3	47 56 813			1	Pipe end	Stos	6
0645	4	47 56 250			2	Seal	Tätning	5
0650	5	45 41 702			3	Electric motor	Elmotor	4
0660	6	47 57 860		LH	1	Engine bracket	Motorkonsol	6
0670	6	47 57 878		RH	1	Engine bracket	Motorkonsol	6
0680	7	45 41 694		ACC	2	Mixed air temperature	Blandlufttemperatur	4
0690	8	46 33 947			1	Link arm	Länkarm	5
0700	9	46 33 939			1	Link arm	Länkarm	5
0710	10	46 33 954		LHD	1	Cover	Kåpa	6
0720	10	46 33 962		RHD	1	Cover	Kåpa	6
0730	11	47 57 209			2	Clip	Clips	5
0740	12	47 57 217			2	Clip	Clips	5
0750	13	47 57 456			1	Link arm	Länkarm	5
0760	14	47 57 472			1	Link arm	Länkarm	5
0770	15	47 57 522			1	Link arm	Länkarm	5
0780	16	47 57 480			2	Link arm	Länkarm	5
0790	17	47 57 464			1	Wheel	Hjul	5
0800	18	46 33 905			6	Clip	Clips	5
0810	19	47 57 761		LHD	1	Cable harness	Ledningsnät	6
0820	19	45 41 744		LHD, ACC	1	Cable harness	Ledningsnät	6
0821	19	47 57 779		RHD	1	Cable harness	Ledningsnät	6
0822	19	47 57 258		RHD, ACC	1	Cable harness	Ledningsnät	6
0825	20	47 58 785			3	.Connector housing	.Kontakthus	
0826	21	44 10 528			1	.Contact housing	.Kontakthus	
0827	22	45 87 903			1	.Connector housing	.Kontakthus	
0830	24	47 56 581			2	Draining hose	Dräneringsslang	5
0840	25	79 85 682			2	Hose clamp	Slangklamma	5
0870	27	79 78 679			2	Hexagon screw	Sexkantsskruv	

MASTER INDEX

0	General	1-A02
2	Engine	1-C02
3A	Electrical systems, instruments	1-F02
4	Transmission	1-I02
5	Brakes	1-K02
6	Front assembly, Steering	1-L02
7	Suspension, Wheels	2-A02
8A	Body, external	2-B02
8B	Body, internal	2-F02
8C	Body, heating and ventilation	2-H02
8D	Tool, Labels	2-I02
9	Accessories	2-J02
10	Numerical register	3-A02

8C GROUP INDEX

Heating and ventilation system 2-H06

2-H14

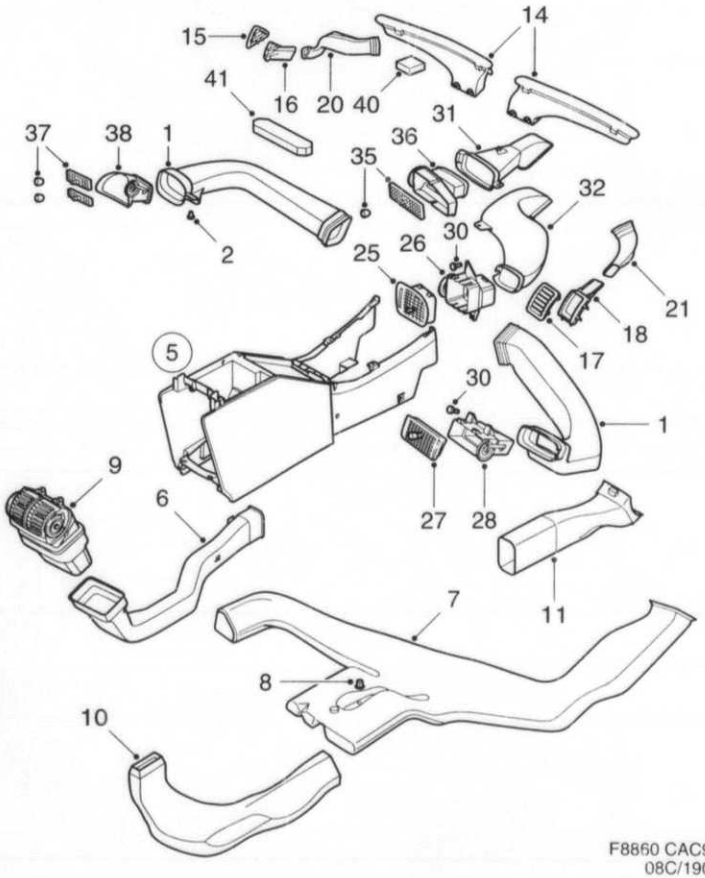

F8860 CAC97
08C/1900

1900	Pos	Part No/Art nr	K S	Notes/Anmärkningar	Qty/ Antal	Description	Benämning	S L
0010	1	45 41 389		LHD, LH	1	Air duct	Luftkanal	6
0020	1	45 41 454		LHD, RH	1	Air duct	Luftkanal	6
0030	1	45 41 421		RHD, LH	1	Air duct	Luftkanal	6
0040	1	45 41 405		RHD, RH	1	Air duct	Luftkanal	6
0050	2	79 77 002			1	Screw	Skruv	5
0060	5			See page 8B-009, 2-F10		Centre console	Mittkonsol	
0070	6	45 41 330			1	Duct	Kanal	6
0080	7	45 41 363		LH	1	Air duct	Luftkanal	5
0090	7	45 41 371		RH	1	Air duct	Luftkanal	5
0100	8	40 87 128			2	Plastic nut	Plastmutter	3
0110	9	45 41 512			1	Air outlet	Luftutsläpp	6
0120	10	45 41 314		LH	1	Duct	Kanal	6
0130	10	45 41 322		RH	1	Duct	Kanal	6
0140	11	45 42 700			1	Channel housing	Kanalhus	6
0150	14	46 33 483		LHD, LH	1	Duct	Kanal	
0160	14	46 33 491		LHD, RH	1	Duct	Kanal	
0170	14	46 33 509		RHD, LH	1	Duct	Kanal	
0180	14	46 33 517		RHD, RH	1	Duct	Kanal	
0190								
0200	15	46 33 368		LHD, LH	1	Air outlet	Luftutsläpp	
0210	15	46 33 426		RHD, LH	1	Air outlet	Luftutsläpp	
0220	16	50 11 804		LHD, LH	1	Air outlet	Luftutsläpp	
0230	16	50 11 788		RHD, LH	1	Air outlet	Luftutsläpp	
0240								
0250	17	46 33 418		LHD, RH	1	Air outlet	Luftutsläpp	
0260	17	46 33 376		RHD, RH	1	Air outlet	Luftutsläpp	
0270	18	50 11 812		LHD, RH	1	Air outlet	Luftutsläpp	
0280	18	50 11 796		RHD, RH	1	Air outlet	Luftutsläpp	
0290								
0300	20	45 42 585		LHD, LH	1	Duct	Kanal	
0310	20	45 42 742		RHD, LH	1	Duct	Kanal	
0320	21	45 42 593		LHD, RH	1	Duct	Kanal	
0330	21	45 42 734		RHD, RH	1	Duct	Kanal	
0340								
0350	25	46 34 747		LHD	1	Air outlet	Luftutsläpp	
0360	25	46 34 846		RHD	1	Air outlet	Luftutsläpp	
0370	26	46 34 754		LHD	1	Air outlet	Luftutsläpp	
0380	26	46 34 853		RHD	1	Air outlet	Luftutsläpp	
0390								
0400	27	46 34 762		LHD	1	Air outlet	Luftutsläpp	
0410	27	46 34 820		RHD	1	Air outlet	Luftutsläpp	
0420	28	46 34 770		LHD	1	Air outlet	Luftutsläpp	
0430	28	46 34 838		RHD	1	Air outlet	Luftutsläpp	
0440	30	46 85 707			8	Screw	Skruv	5
0450								
0460	31	45 41 504		LHD	1	Duct	Kanal	
0470	31	45 42 130		RHD	1	Duct	Kanal	
0480	32	45 42 759		LHD	1	Duct	Kanal	
0490	32	45 42 767		RHD	1	Duct	Kanal	
0500								
0510	35	46 34 721		LHD, DRIVER RH	1	Air outlet	Luftutsläpp	
0520	35	46 34 788		RHD, DRIVER LH	1	Air outlet	Luftutsläpp	
0530	36	46 34 739		LHD, DRIVER RH	1	Air outlet	Luftutsläpp	
0540	36	46 34 796		RHD, DRIVER LH	1	Air outlet	Luftutsläpp	
0550								
0560	37	46 34 705		LHD, DRIVER LH	1	Air outlet	Luftutsläpp	
0570	37	46 34 804		RHD, DRIVER RH	1	Air outlet	Luftutsläpp	
0580	38	46 34 713		LHD, DRIVER LH	1	Air outlet	Luftutsläpp	
0590	38	46 34 812		RHD, DRIVER RH	1	Air outlet	Luftutsläpp	
0600								
0610	40	48 84 532		LHD	1	Sound absorber	Ljudabsorbent	
0620	40	49 31 093		RHD	1	Sound absorber	Ljudabsorbent	
0630	41	48 84 524			1	Sound absorber	Ljudabsorbent	

MASTER INDEX

0	General	1-A02
2	Engine	1-C02
3A	Electrical systems, instruments	1-F02
4	Transmission	1-I02
5	Brakes	1-K02
6	Front assembly, Steering	1-L02
7	Suspension, Wheels	2-A02
8A	Body, external	2-B02
8B	Body, internal	2-F02
8C	Body, heating and ventilation	2-H02
8D	Tool, Labels	2-I02
9	Accessories	2-J02
10	Numerical register	3-A02

8C GROUP INDEX

Heating and ventilation system	2-H06

2-H16 AC compressor / AC kompressor

1960	Pos	Part No/Art nr	K S	Notes/Anmärkningar	Qty/ Antal	Description	Benämning	S L
0010	1	45 41 207			1	Compressor	Kompressor	5
0020	2	47 56 888			1	.Clutch	.Koppling	6
0030	3	47 56 896			1	.Plug	.Plugg	5
0150	12	79 82 960		4-CYL	3	Hexagon screw	Sexkantsskruv	5
0180	14			See page 2-015, 1-C16		Bracket	Konsol	

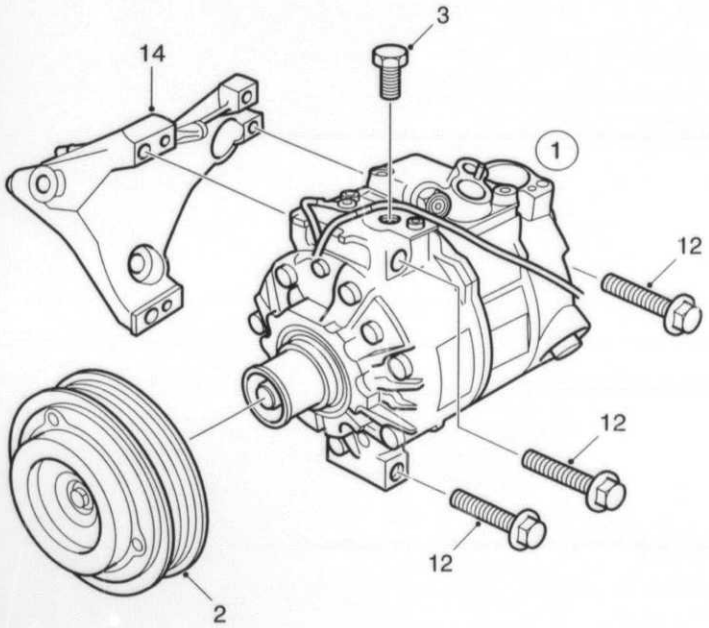

F8861 CAC97
08C/1960

MASTER INDEX

0	General	1-A02
2	Engine	1-C02
3A	Electrical systems, instruments	1-F02
4	Transmission	1-I02
5	Brakes	1-K02
6	Front assembly, Steering	1-L02
7	Suspension, Wheels	2-A02
8A	Body, external	2-B02
8B	Body, internal	2-F02
8C	Body, heating and ventilation	2-H02
8D	Tool, Labels	2-I02
9	Accessories	2-J02
10	Numerical register	3-A02

8C GROUP INDEX

Heating and ventilation system	2-H06

2-H18 AC condenser / AC kondensor

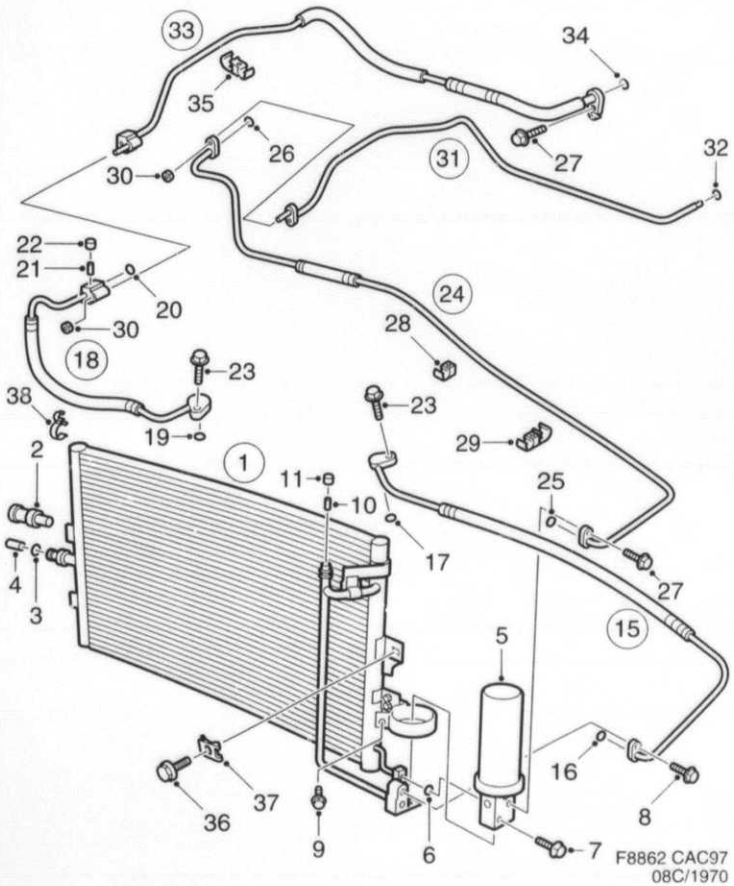

1970	Pos	Part No/Art nr	K S	Notes/Anmärkningar	Qty/ Antal	Description	Benämning	S L
0010	1	45 41 215			1	Condenser	Kondensor	5
0020	2	48 68 360			1	.Pressure sensor	.Tryckgivare	4
0030	3	47 59 064			1	.O-ring	.O-ring	2
0040	4	47 59 056			1	.Valve	.Ventil	5
0050	5	47 59 072			1	.Reservoir	.Behållare	4
0060	6	45 42 346			1	.O-ring	.O-ring	2
0070	7	47 59 049			1	.Screw	.Skruv	5
0080	8	79 82 325			1	.Screw	.Skruv	5
0090	9	45 42 361			1	.Screw	.Skruv	5
0100	10	45 42 353			1	.Valve	.Ventil	5
0110	11	43 83 956			1	.Plug	.Plugg	5
0120	15	45 42 429			1	Hose assembly	Slangledning	6
0130	16	47 57 084			1	.O-ring	.O-ring	2
0140	17	43 18 036			1	.O-ring	.O-ring	2
0150	18	45 42 197			1	Hose assembly	Slangledning	6
0160	19	47 56 110			1	.O-ring	.O-ring	2
0170	20	47 56 128			1	.O-ring	.O-ring	2
0180	21	47 58 132			1	.Valve	.Ventil	6
0190	22	47 58 140			1	.Plug	.Plugg	5
0200	23	79 78 224			2	Screw	Skruv	5
0210	24	45 41 264			1	Tube	Rör	6
0220	25	47 57 076			1	.O-ring	.O-ring	2
0230	26	48 69 186			1	.O-ring	.O-ring	
0240	27	79 82 325			2	Screw	Skruv	5
0250	28	46 33 202			1	Clip	Clips	5
0260	29	46 33 715			1	Clip	Clips	5
0270	30	79 77 929			2	Nut	Mutter	5
0280	31	45 41 256			1	Tube	Rör	6
0290	32	47 57 076			1	.O-ring	.O-ring	2
0300	33	45 41 249			1	Tube	Rör	6
0310	34	47 57 092			1	.O-ring	.O-ring	2
0320	35	46 33 210			2	Clip	Clips	5
0330	36	79 76 947			2	Screw	Skruv	5
0340	37	82 67 098			2	Clip	Clips	5
0350	38	48 69 194			1	Spacer clip	Distansclips	

MASTER INDEX

0	General	1-A02
2	Engine	1-C02
3A	Electrical systems, instruments	1-F02
4	Transmission	1-I02
5	Brakes	1-K02
6	Front assembly, Steering	1-L02
7	Suspension, Wheels	2-A02
8A	Body, external	2-B02
8B	Body, internal	2-F02
8C	Body, heating and ventilation	2-H02
8D	Tool, Labels	2-I02
9	Accessories	2-J02
10	Numerical register	3-A02

8C GROUP INDEX

Heating and ventilation system	2-H06

8D

Tool, Labels
Verktyg, Etiketter
Herramient, Etiquetas

2-I02

0041
0020
0040
0060
0080
0100
0120
0125
0130
0140
0150

CONTENTS.

Tool kit	8D : 5	2-I06
Labels		
Labels, part 1	8D : 7	2-I08
Labels, part 2	8D : 9	2-I10
Labels, part 3	8D : 11	2-I12

MASTER INDEX

0	General	1-A02
2	Engine	1-C02
3A	Electrical systems, instruments	1-F02
4	Transmission	1-I02
5	Brakes	1-K02
6	Front assembly, Steering	1-L02
7	Suspension, Wheels	2-A02
8A	Body, external	2-B02
8B	Body, internal	2-F02
8C	Body, heating and ventilation	2-H02
8D	Tool, Labels	2-I02
9	Accessories	2-J02
10	Numerical register	3-A02

8D GROUP INDEX

Tool kit	2-I06
Labels	2-I08

INNEHÅLLSFÖRTECKNING.

Verktygssats ..... 8D : 5 2-I06
Etiketter
Etiketter, del 1 ..... 8D : 7 2-I08
Etiketter, del 2 ..... 8D : 9 2-I10
Etiketter, del 3 ..... 8D : 11 2-I12

SUMARIO.

Bolsa de herramientas ..... 8D : 5 2-I06
Etiquetas
Etiquetas, 1a parte ..... 8D : 7 2-I08
Etiquetas, 2a parte ..... 8D : 9 2-I10
Etiquetas, 3a parte ..... 8D : 11 2-I12

MASTER INDEX

0	General	1-A02
2	Engine	1-C02
3A	Electrical systems, instruments	1-F02
4	Transmission	1-I02
5	Brakes	1-K02
6	Front assembly, Steering	1-L02
7	Suspension, Wheels	2-A02
8A	Body, external	2-B02
8B	Body, internal	2-F02
8C	Body, heating and ventilation	2-H02
8D	Tool, Labels	2-I02
9	Accessories	2-J02
10	Numerical register	3-A02

8D GROUP INDEX

Tool kit 2-I06
Labels 2-I08

2-I06 *Tool kit* *Verktygsats*

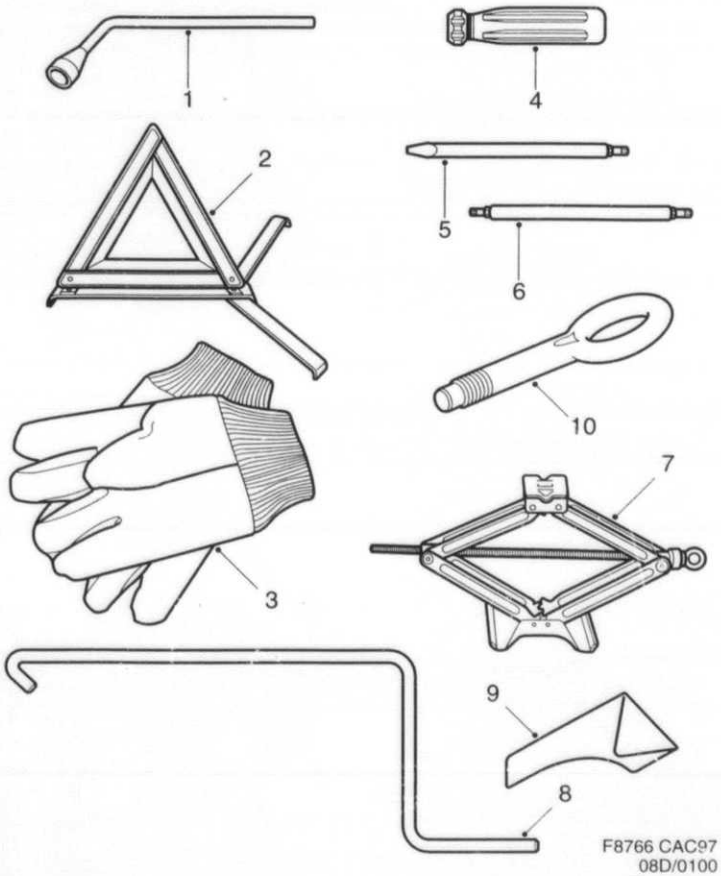

	Pos	Part No/Art nr	K S	Notes/Anmärkningar	Qty/ Antal	Description	Benämning	S L
0100								
0010	1	42 41 394			1	Socket wrench	Hylsnyckel	4
0020	2	50 00 526			1	Warning triangle	Varningstriangel	
0030	3			45/3012952	1	Work gloves	Skyddshandskar	
0040	4	48 80 217			1	Handle	Skaft	5
0050	5	41 98 891		TORX 25	1	Screw driver bit	Mejselspets	5
0060	6	45 10 731		TRORX 10/30	1	Screw driver bit	Mejselspets	5
0070	7	49 07 747			1	Jack	Domkraft	6
0072	8	49 07 754			1	Crank	Vev	4
0075	9	49 08 091			1	Bag	Säck	5
0080	10	47 22 948			1	Towing eye	Bogserögla	

MASTER INDEX

0	General	1-A02
2	Engine	1-C02
3A	Electrical systems, instruments	1-F02
4	Transmission	1-I02
5	Brakes	1-K02
6	Front assembly, Steering	1-L02
7	Suspension, Wheels	2-A02
8A	Body, external	2-B02
8B	Body, internal	2-F02
8C	Body, heating and ventilation	2-H02
8D	Tool, Labels	2-I02
9	Accessories	2-J02
10	Numerical register	3-A02

8D GROUP INDEX

Tool kit	2-I06
Labels	2-I08

2-I08 Labels Part 1 — Etiketter Del 1

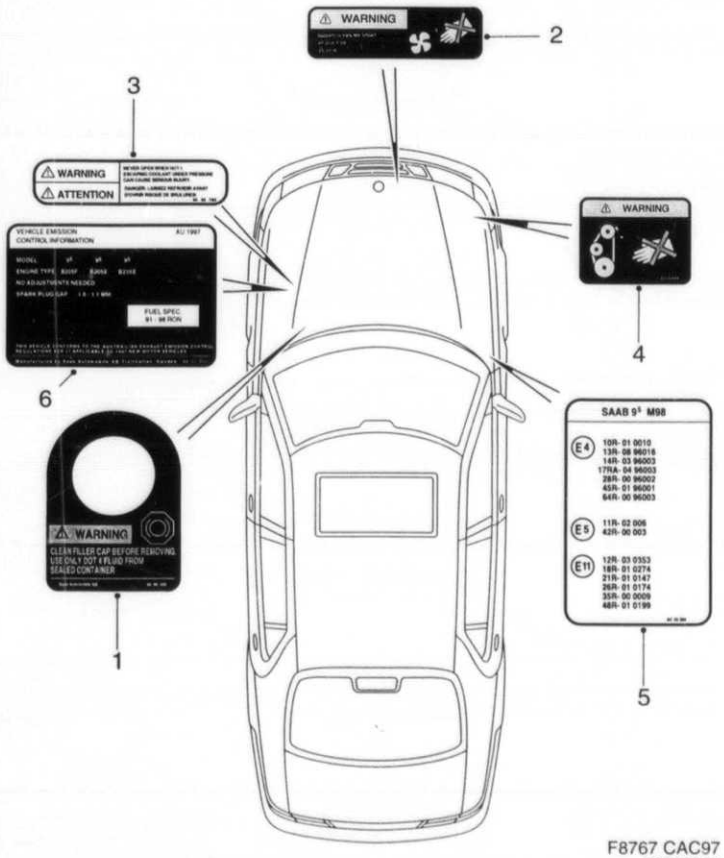

F8767 CAC97
08D/0150

0150	Pos	Part No/Art nr	K S	Notes/Anmärkningar	Qty/ Antal	Description	Benämning	S L
0010	1	45 68 408		CLEAN FILLER CAP	1	Label	Etikett	
0020								
0030	2	43 57 778		WARNING RADIATOR FAN	1	Label	Etikett	4
0040								
0050	3	44 44 196		WARNING EXPANSION TANK	1	Label	Etikett	4
0060								
0070	4	43 59 444		WARNING BELT	1	Label	Etikett	4
0080								
0090	5	45 72 731		ECE-APPROVALS	1	Label	Etikett	
0100								
0110	6	47 52 440		32), AU	1	Label	Etikett	4

32. Exhaust emission control device Avgasrening

MASTER INDEX

0	General	1-A02
2	Engine	1-C02
3A	Electrical systems, instruments	1-F02
4	Transmission	1-I02
5	Brakes	1-K02
6	Front assembly, Steering	1-L02
7	Suspension, Wheels	2-A02
8A	Body, external	2-B02
8B	Body, internal	2-F02
8C	Body, heating and ventilation	2-H02
8D	Tool, Labels	2-I02
9	Accessories	2-J02
10	Numerical register	3-A02

8D GROUP INDEX

Tool kit	2-I06
Labels	2-I08

2-I10 Labels Part 2 — Etiketter Del 2

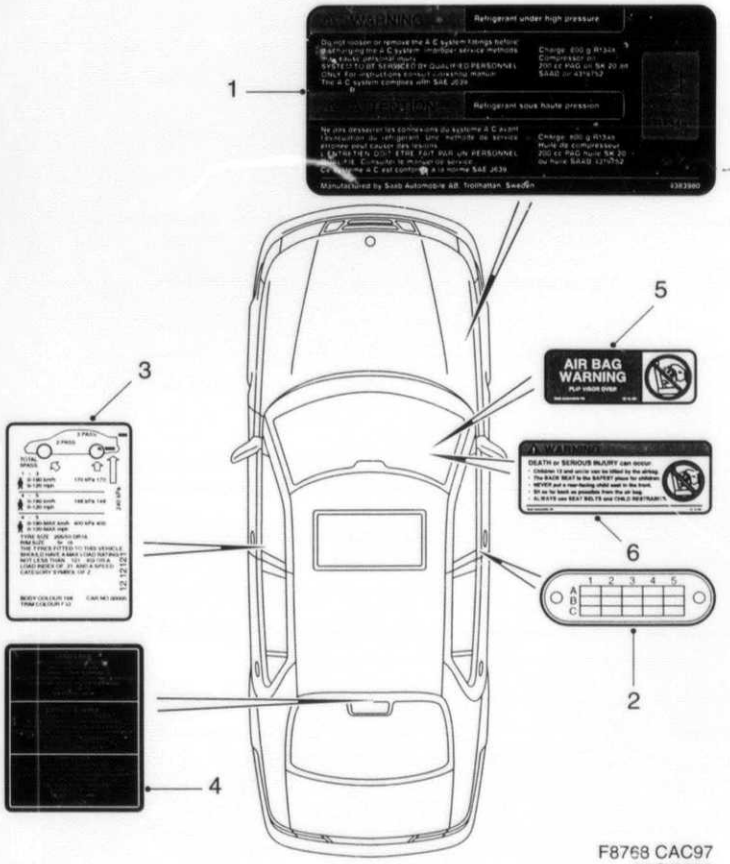

F8768 CAC97
08D/0200

	Pos	Part No/Art nr	K S	Notes/Anmärkningar	Qty/ Antal	Description	Benämning	S L
0200								
0010	1	47 56 961		AC/ACC, WARNING RECOMMENDED CHARGE	1	Label	Etikett	5
0020								
0030								
0040	2	43 99 804		CAMPAIGN	1	Sign	Skylt	5
0050								
0060	3	41 90 831		26)	1	Label	Etikett	
0070								
0080	4	46 30 752		LONG LOAD	1	Label	Etikett	5
0090								
0100	5	50 10 103		AIRBAG FLIP VISOR OVER, US, CA	1	Label	Etikett	
0110								
0115								
0120	6	50 10 111		WARNING AIRBAG, US, CA	2	Label	Etikett	
0130								

26. State body and trim colour code, label number and chassis number. Uppge färg- och klädselkod, etikettnummer och chassinummer.

MASTER INDEX

0	General	1-A02
2	Engine	1-C02
3A	Electrical systems, instruments	1-F02
4	Transmission	1-I02
5	Brakes	1-K02
6	Front assembly, Steering	1-L02
7	Suspension, Wheels	2-A02
8A	Body, external	2-B02
8B	Body, internal	2-[illegible]02
8C	Body, heating and ventilation	2-H02
8D	Tool, Labels	2-I02
9	Accessories	2-J02
10	Numerical register	3-A02

8D GROUP INDEX

Tool kit	2-I06
Labels	2-I08

2-I12 Labels Part 3 — Etiketter Del 3

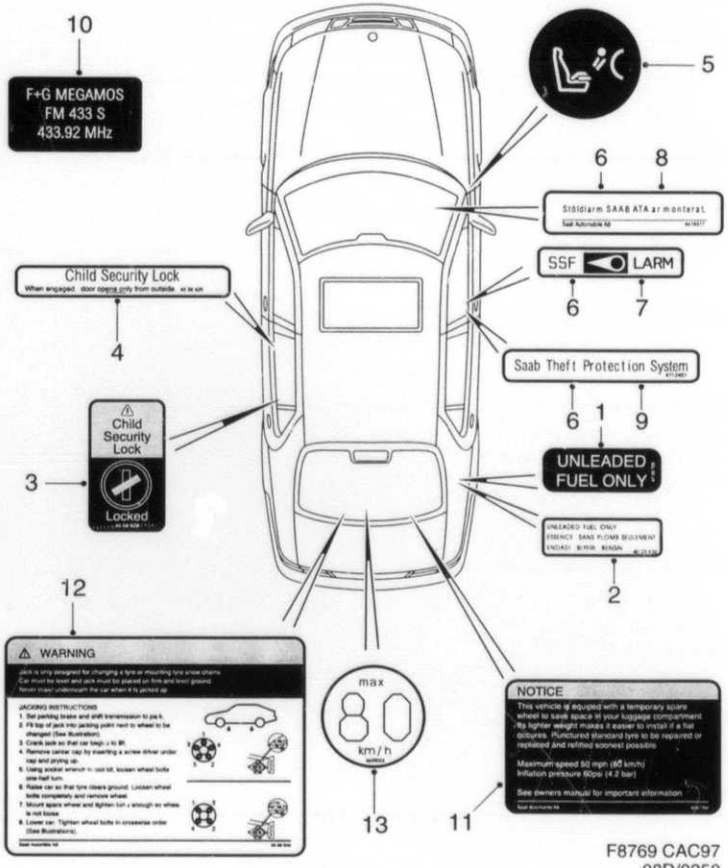

F8769 CAC97
08D/0250

0250	Pos	Part No/Art nr	K S	Notes/Anmärkningar	Qty/ Antal	Description	Benämning	S L
0010	1	47 26 725		UNLEADED FUEL ONLY, AU	1	Label	Etikett	4
0020								
0030	2	47 26 717		UNLEADED FUEL ONLY	1	Label	Etikett	4
0040								
0050	3	45 58 409		LH, CHILD LOCK	1	Label	Etikett	
0060	3	45 58 417		RH, CHILD LOCK	1	Label	Etikett	
0070								
0080	4	45 58 425		CHILD SECURITY LOCK	2	Label	Etikett	5
0090								
0100	5	50 10 129		PASSENGER SIDE AIRBAG ∅ 30MM	1	Label	Etikett	
0101								
0105	5	50 11 465		PASSENGER SIDE AIRBAG ∅ 50MM	1	Label	Etikett	
0106								
0110								
0120	6	47 13 731		ALARM LABELS	1	Label	Etikett	5
0130	7	46 18 369		1),ANTI-THEFT SYSTEM, SE	3	.Label	.Etikett	5
0140	8	46 18 377		1), STOLDLARM, SE	1	.Label	.Etikett	5
0150	9	47 12 451		1), SAAB THEFT PROTECTION SYSTEM	1	.Label	.Etikett	5
0160								
0170								
0180	10	47 13 723		25)	2	Label	Etikett	
0190								
0200	11	45 67 764		TEMPORARY SPARE, AU	1	Label	Etikett	
0210								
0220	12	46 89 949		JACKING INSTRUCTION, US, CA, AU	1	Label	Etikett	
0230								
0240								
0250	13	48 39 023		MAX 80 KM/H	1	Label	Etikett	5

1. Not as separate spare part. Ej som separat reservdel.
25. For transmitter anti theft system För sändare stöldlarm

MASTER INDEX

0	General	1-A02
2	Engine	1-C02
3A	Electrical systems, instruments	1-F02
4	Transmission	1-I02
5	Brakes	1-K02
6	Front assembly, Steering	1-L02
7	Suspension, Wheels	2-A02
8A	Body, external	2-B02
8B	Body, internal	2-F02
8C	Body, heating and ventilation	2-H02
8D	Tool, Labels	2-I02
9	Accessories	2-J02
10	Numerical register	3-A02

8D GROUP INDEX

Tool kit	2-I06
Labels	2-I08

9

Accessories
Tillbehör
Accesorios

2-J02

TABLE OF CONTENTS

Accessories engine		
Exhaust system	9 : 5	2-J06
Accessories electrical		
Battery	9 : 7	2-J08
Spotlight	9 : 9	2-J10
Speed control system, anti theft system	9 : 11	2-J12
Audio system	9 : 13	2-J14
Mobile telephone	9 : 15	2-J16
Electric equipment, other	9 : 17	2-J18
Accessories transmission		
Gear lever knob, leather gaiter	9 : 19	2-J20
Accessories steering		
Steering wheel	9 : 21	2-J22
Accessories chassis		
Wheel	9 : 23	2-J24
Level control	9 : 25	2-K02
Accessories body		
Exterior	9 : 27	2-K04
Wooden panel	9 : 29	2-K06
Carpet	9 : 31	2-K08
Head restraint, head restraint cover	9 : 33	2-K10
Other interior equipment	9 : 35	2-K12
Towing hitch	9 : 37	2-K14
Cable harness kit	9 : 39	2-K16
Climate control, engine heater	9 : 41	2-K18
Climate control, parking heater	9 : 43	2-K20
Climate control, air conditioning	9 : 45	2-K22
Safety	9 : 47	2-K24
Touch-up paint	9 : 49	2-L02
Luggage compartment, transport	9 : 51	2-L04

MASTER INDEX

0	General	1-A02
2	Engine	1-C02
3A	Electrical systems, instruments	1-F02
4	Transmission	1-I02
5	Brakes	1-K02
6	Front assembly, Steering	1-L02
7	Suspension, Wheels	2-A02
8A	Body, external	2-B02
8B	Body, internal	2-F02
8C	Body, heating and ventilation	2-H02
8D	Tool, Labels	2-I02
9	Accessories	2-J02
10	Numerical register	3-A02

9 GROUP INDEX

Accessories engine	2-J06
Accessories electrical	2-J08
Accessories transmission	2-J20
Accessories steering	2-J22
Accessories chassis	2-J24
Accessories body	2-K04

2-J03

INNEHÅLLSFÖRTECKNING

Tillbehör motor		
Avgassystem	9 : 5	2-J06
Tillbehör elektriskt		
Batteri	9 : 7	2-J08
Extraljus	9 : 9	2-J10
Farthållningssystem, stöldlarm	9 : 11	2-J12
Ljudsystem	9 : 13	2-J14
Mobiltelefon	9 : 15	2-J16
Övrig elektrisk utrustning	9 : 17	2-J18
Tillbehör kraftöverföring		
Växelspaksknopp, läderdamask	9 : 19	2-J20
Tillbehör styrinrättning		
Ratt	9 : 21	2-J22
Tillbehör chassi		
Hjul	9 : 23	2-J24
Nivåreglering	9 : 25	2-K02
Tillbehör kaross		
Exteriör	9 : 27	2-K04
Träpanel	9 : 29	2-K06
Matta	9 : 31	2-K08
Nackstöd, nackstödspåse	9 : 33	2-K10
Övrig invändig utrustning	9 : 35	2-K12
Draganordning	9 : 37	2-K14
Ledningsnätssats	9 : 39	2-K16
Klimatsystem, motorvärmare	9 : 41	2-K18
Klimatsystem, motor-/kupevärmare	9 : 43	2-K20
Klimatsystem, luftkonditionering	9 : 45	2-K22
Säkerhet	9 : 47	2-K24
Bättringsfärg	9 : 49	2-L02
Bagagerum, transport	9 : 51	2-L04

2-J04

SUMARIO

Accesorios motor		
Sistema escape	9 : 5	2-J06
Accesorios electrico		
Bateria	9 : 7	2-J08
Faro largadist	9 : 9	2-J10
Sistema control velocidad, sistema antirrobo	9 : 11	2-J12
Sistema de audio	9 : 13	2-J14
Radiotelefone	9 : 15	2-J16
Otro equipo electrico	9 : 17	2-J18
Accesorios transmision		
Empunadura palanca cambio, proteccion de cuero	9 : 19	2-J20
Accesorios direccion		
Volante	9 : 21	2-J22
Accesorios chasis		
Rueda	9 : 23	2-J24
Control de nivel	9 : 25	2-K02
Accesorios carroceria		
Exterior	9 : 27	2-K04
Panel de madera	9 : 29	2-K06
Alfombra	9 : 31	2-K08
Reclinador, cubierta del apoyacabezas	9 : 33	2-K10
Otro equipo interior	9 : 35	2-K12
Dispositivo traccion	9 : 37	2-K14
Cableado	9 : 39	2-K16
Sistema de climatizacion, calefactor motor	9 : 41	2-K18
Sistema de climatizacion, calentador cabina y motor	9 : 43	2-K20
Sistema de climatizacion, acondicionamiento de aire	9 : 45	2-K22
Xeguridad	9 : 47	2-K24
Pintura retoque	9 : 49	2-L02
Compartimento d'equipajes, transporte	9 : 51	2-L04

MASTER INDEX

0	General	1-A02
2	Engine	1-C02
3A	Electrical systems, instruments	1-F02
4	Transmission	1-I02
5	Brakes	1-K02
6	Front assembly, Steering	1-L02
7	Suspension, Wheels	2-A02
8A	Body, external	2-B02
8B	Body, internal	2-F02
8C	Body, heating and ventilation	2-H02
8D	Tool, Labels	2-I02
9	Accessories	2-J02
10	Numerical register	3-A02

9 GROUP INDEX

Accessories engine	2-J06
Accessories electrical	2-J08
Accessories transmission	2-J20
Accessories steering	2-J22
Accessories chassis	2-J24
Accessories body	2-K04

2-J06

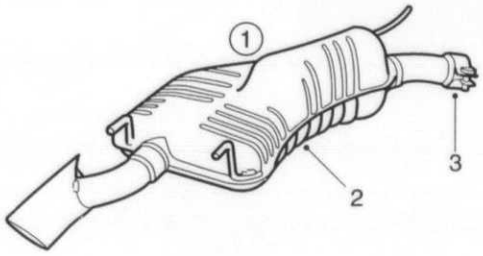

F8770 CAC97
09/2500

2500	Pos	Part No/Art nr	K S	Notes/Anmärkningar	Qty/ Antal	Description	Benämning	S L
0010	1	48 76 108		40/400107629	1	Silencer	Ljuddämpare	
0020	2	47 51 715			1	.Silencer	.Ljuddämpare	1
0030	3	47 51 756			1	..Exhaust pipe clamp	..Avgasrörklamma	
0040		48 76 116			1	.Assembly instruction	.Monteringsanvisning	1

MASTER INDEX

0	General	1-A02
2	Engine	1-C02
3A	Electrical systems, instruments	1-F02
4	Transmission	1-I02
5	Brakes	1-K02
6	Front assembly, Steering	1-L02
7	Suspension, Wheels	2-A02
8A	Body, external	2-B02
8B	Body, internal	2-F02
8C	Body, heating and ventilation	2-H02
8D	Tool, Labels	2-I02
9	Accessories	2-J02
10	Numerical register	3-A02

9 GROUP INDEX

Accessories engine	2-J06
Accessories electrical	2-J08
Accessories transmission	2-J20
Accessories steering	2-J22
Accessories chassis	2-J24
Accessories body	2-K04

2 -J08

Battery
Batteri

3400

	Pos	Part No/Art nr	K S	Notes/Anmärkningar	Qty/ Antal	Description	Benämning	S L
0010	1	49 47 065		60AH, 40/400110201	X	Battery	Batteri	
0020	1	48 13 820		70AH, 40/400107918	X	Battery	Batteri	

1

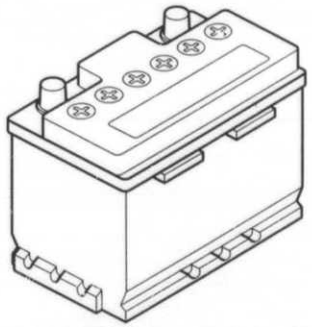

F8771 CAC97
09/3400

MASTER INDEX

0	General	1-A02
2	Engine	1-C02
3A	Electrical systems, instruments	1-F02
4	Transmission	1-I02
5	Brakes	1-K02
6	Front assembly, Steering	1-L02
7	Suspension, Wheels	2-A02
8A	Body, external	2-B02
8B	Body, internal	2-F02
8C	Body, heating and ventilation	2-H02
8D	Tool, Labels	2-I02
9	Accessories	2-J02
10	Numerical register	3-A02

9 GROUP INDEX

Accessories engine	2-J06
Accessories electrical	2-J08
Accessories transmission	2-J20
Accessories steering	2-J22
Accessories chassis	2-J24
Accessories body	2-K04

2-J10

Spotlight

Extraljus

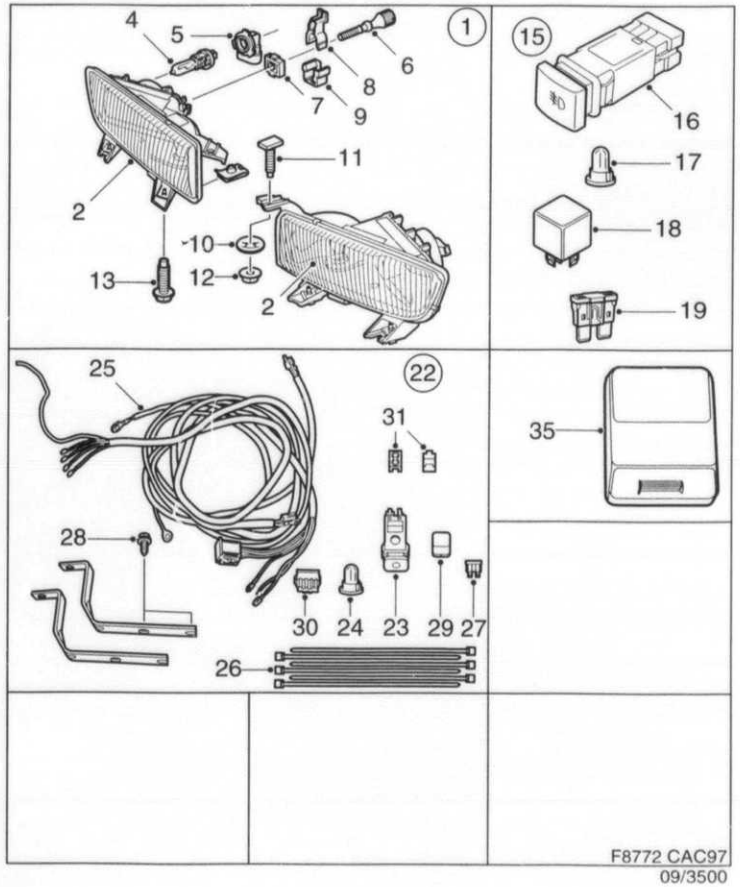

3500	Pos	Part No/Art nr	K S	Notes/Anmärkningar	Qty/ Antal	Description	Benämning	S L
0010	1	48 33 190		40/400107330	1	Fog light	Dimljus	
0020	2	45 60 835		LH	1	.Fog light	.Dimljus	4
0030	2	45 60 843		RH	1	.Fog light	.Dimljus	4
0040	3	43 41 095			2	..Clip nut	..Klämmutter	5
0050	4	46 85 301			1	..Bulb	..Glödlampa	3
0060	5	48 32 085			1	..Bulb socket	..Lamphållare	6
0070	6	49 12 457			1	..Adjustment screw	..Justerskruv	
0080	7	49 12 465			1	..Nut	..Mutter	
0090	8	49 12 473			1	..Bushing	..Bussning	
0100	9	49 12 481			1	..Clip	..Clips	
0110	10	49 12 507			1	..Washer	..Bricka	
0120	11	45 96 979			1	..Screw	..Skruv	
0130	12	79 77 929			2	.Nut	.Mutter	5
0140	13	79 78 109			4	.Screw	.Skruv	5
0150								
0160	15	48 32 093		40/400106209	1	Installation kit	Installationssats	
0170						fog light	dimljus	
0180	16	44 09 223			1	.Switch	.Strömställare	3
0190	17	*44 66 421*		NLS - USE 4466439	1	..Bulb	..Glödlampa	4
0200	18	42 24 192			1	.Relay	.Relä	6
0210	19	79 74 645		15A	1	.Fuse	.Säkring	1
0220		47 85 242			1	.Assembly instruction	.Monteringsanvisning	
0225								
0230	22	47 85 259		40/400107322	1	Mounting kit	Monteringssats	
0240	23	45 19 641			1	.Switch	.Strömställare	3
0250	24				1	..	..	
0260	25	47 33 184			1	.Cable harness	.Ledningsnät	
0270	26	79 71 880			10	.Tensioning band	.Spännband	4
0280	27	79 74 645		15A	1	.Fuse	.Säkring	1
0290	28	79 78 190			4	.Screw	.Skruv	5
0300	29	85 22 310			1	.Relay	.Relä	3
0310	30	91 23 399			1	.Connector housing	.Skarvhus	4
0315	31	95 60 012			2	.Cable joint	.Ledningsförbindning	3
0320		47 85 267			1	.Assembly instruction	.Monteringsanvisning	
0325								
0330	35	45 63 011		EU	1	Bulb case	Glödlampetui	

MASTER INDEX

0	General	1-A02
2	Engine	1-C02
3A	Electrical systems, instruments	1-F02
4	Transmission	1-I02
5	Brakes	1-K02
6	Front assembly, Steering	1-L02
7	Suspension, Wheels	2-A02
8A	Body, external	2-B02
8B	Body, internal	2-F02
8C	Body, heating and ventilation	2-H02
8D	Tool, Labels	2-I02
9	Accessories	2-J02
10	Numerical register	3-A02

9 GROUP INDEX

Accessories engine	2-J06
Accessories electrical	2-J08
Accessories transmission	2-J20
Accessories steering	2-J22
Accessories chassis	2-J24
Accessories body	2-K04

2-J12

Speed control system
Anti theft system

Farthållningssystem
Stöldlarm

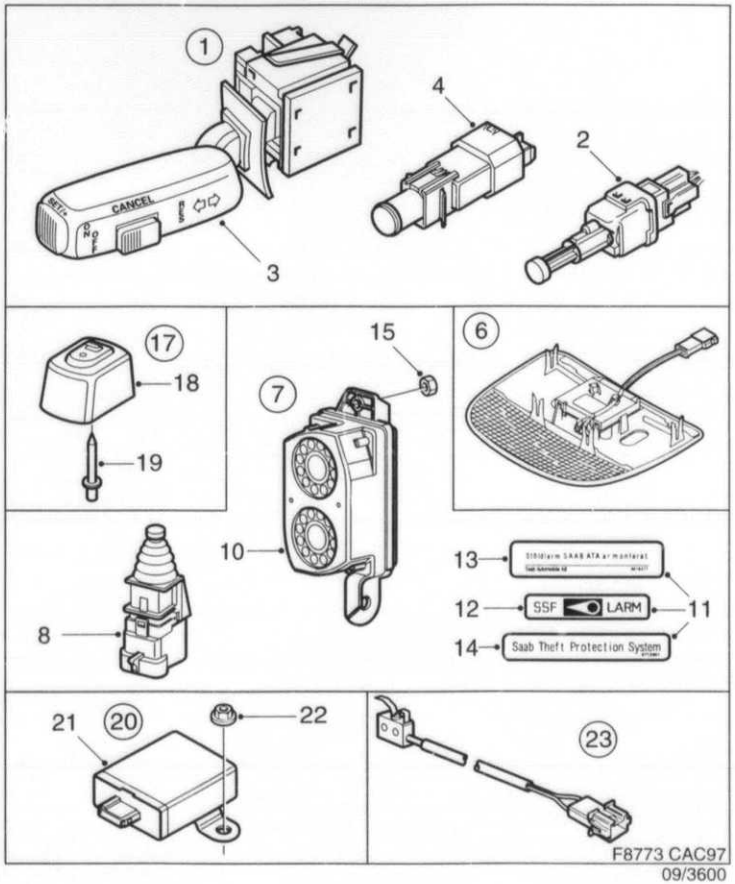

3600	Pos	Part No/Art nr	K S	Notes/Anmärkningar	Qty/ Antal	Description	Benämning	S L
0010	1	86 88 129		40/400107553	1	Speed control system	Farthållningssystem	
0020	2	46 17 551			1	.Brake light switch	.Bromsljuskontakt	3
0030	3	46 69 081			1	.Switch	.Strömställare	2
0040	4	48 09 166			1	.Pedel contact	.Pedalkontakt	
0050		86 88 137			1	.Assembly instruction	.Monteringsanvisning	
0060								
0061	6	49 35 318		24), 40/400108106	1	Sensor	Sensor	5
0063	6	50 01 045		25), 40/400108114	1	Sensor	Sensor	5
0066								
0070	7	48 70 366		40/400107819	1	Anti theft system	Stöldlarm	
0080	8	43 23 259			1	.Contact	.Kontakt	3
0100	10	45 88 257			1	.Siren	.Siren	5
0110	11	47 13 731			1	.Label	.Etikett	5
0120	12	46 18 369		1)	3	..Label	..Etikett	5
0130	13	46 18 377		1)	1	..Label	..Etikett	5
0140	14	47 12 451		1)	1	..Label	..Etikett	5
0150	15	79 77 929			1	.Nut	.Mutter	5
0160								
0161	17	48 73 402		40/400108072, EU, GB	1	Protecting plate	Skyddsplåt	
0163	18	48 73 246			1	.Protecting plate	.Skyddsplåt	
0164	19	79 72 516			1	.Rivet	.Nit	5
0165								
0170	20	47 11 768		40/400107223	1	Sensor tilt sensor	Sensor vinkelgivare	5
0175								
0180	21	45 88 232			1	.Sensor	.Sensor	5
0190	22	40 87 128			2	.Plastic nut	.Plastmutter	5
0200								
0210	23	43 27 300		US, CA, LA, PA, ME, AU	1	Switch luggage compartment lock	Brytare bagagerumslås	
0220								

1. Not as separate spare part. Ej som separat reservdel.
24. For cars with textile covers. För bilar med textilklädsel.
25. For cars with leather covers. För bilar med läderklädsel.

MASTER INDEX

0	General	1-A02
2	Engine	1-C02
3A	Electrical systems, instruments	1-F02
4	Transmission	1-I02
5	Brakes	1-K02
6	Front assembly, Steering	1-L02
7	Suspension, Wheels	2-A02
8A	Body, external	2-B02
8B	Body, internal	2-F02
8C	Body, heating and ventilation	2-H02
8D	Tool, Labels	2-I02
9	Accessories	2-J02
10	Numerical register	3-A02

9 GROUP INDEX

Accessories engine	2-J06
Accessories electrical	2-J08
Accessories transmission	2-J20
Accessories steering	2-J22
Accessories chassis	2-J24
Accessories body	2-K04

2-J14

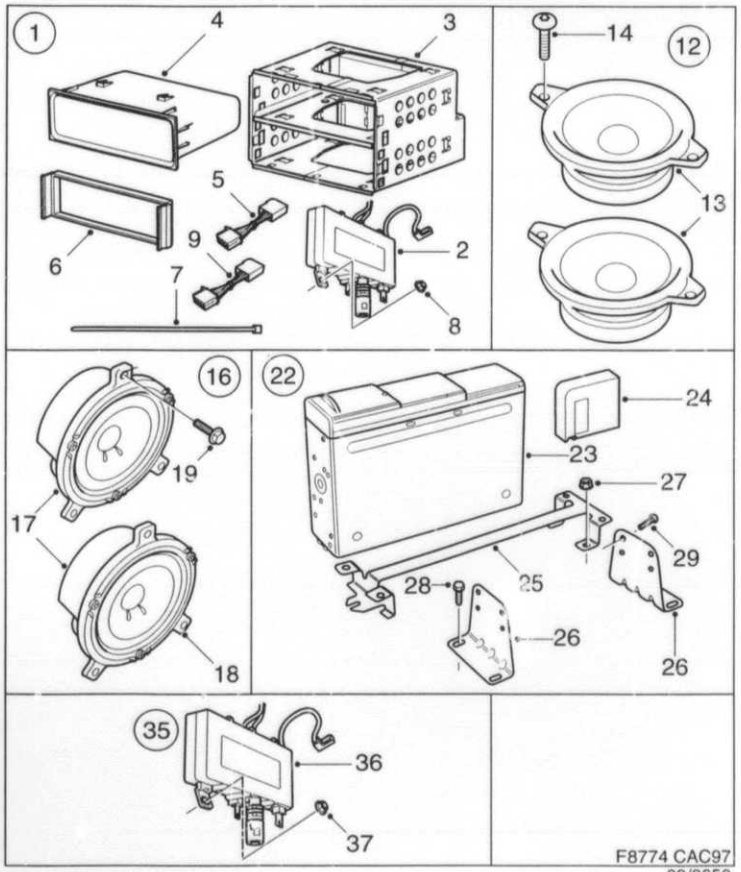

3650	Pos	Part No/Art nr	K S	Notes/Anmärkningar	Qty/ Antal	Description	Benämning	S L
0010	1	47 12 196		40/400106662	1	Installation kit	Installationssats	
0020	2	46 17 064			1	.Antenna	.Antenn	
0030	3	47 11 578			1	.Radio basket	.Radiokorg	
0040	4	47 11 586			1	.Storage tray	.Förvaringsfack	
0050	5	47 12 428		40/400106720	1	.Cable harness	.Ledningsnät	
0060	6	47 14 234		40/400107850	1	.Decor frame	.Dekorram	5
0070	7	79 71 864			3	.Tensioning band	.Spännband	5
0080	8	79 77 929			2	.Nut	.Mutter	5
0090	9	49 46 455		40/400109617	1	.Cable harness	.Ledningsnät	
0100		47 12 204			1	.Assembly instruction	.Monteringsanvisning	
0110								
0120	12	47 12 295		23), 40/400106753	1	Loudspeaker kit	Högtalarsats	
0130						instrument panel	instrumentpanel	
0140	13	46 16 850			2	.Loudspeaker	.Högtalare	
0150	14	79 22 354			4	.Screw	.Skruv	5
0160		47 12 279			1	.Assembly instruction	.Monteringsanvisning	
0170								
0180	16	47 12 287		23), 40/400106746	1	Loudspeaker kit	Högtalarsats	
0190						rear door	bakdörr	
0200	17	46 16 934			2	.Loudspeaker	.Högtalare	
0210	18	47 14 903			1	..Mounting frame	..Monteringsram	
0220	19	79 78 455			6	.Screw	.Skruv	5
0230		47 12 279			1	.Assembly instruction	.Monteringsanvisning	
0240								
0260	22	47 12 311		40/400106670	1	CD-player	CD-spelare	
0270	23	46 17 072			1	.CD-player	.CD-spelare	
0280	24	47 11 255			1	..CD magazine	..CD-magasin	5
0290	25	47 11 289			1	.Bracket	.Konsol	
0300	26	47 11 297			2	.Bracket	.Konsol	
0310	27	79 77 929			2	.Nut	.Mutter	5
0320	28	79 78 091			4	.Screw	.Skruv	5
0330	29	80 59 230			4	.Screw	.Skruv	5
0340		47 12 329			1	.Assembly instruction	.Monteringsanvisning	
0350								
0360	35	47 12 246		40/400106696	1	Antenna kit	Antennsats	
0370						1-channel	1-kanal	
0380	35	47 12 220		40/400106688	1	Antenna kit	Antennsats	
0390						2-channels	2-kanals	
0400	36	48 70 309			1	.Antenna	.Antenn	
0410						1-channel	1-kanal	
0420	36	48 70 317			1	.Antenna	.Antenn	
0430						2-channels	2-kanals	
0440	37	79 77 929			1	..Nut	..Mutter	5
0460		47 12 238			1	.Assembly instruction	.Monteringsanvisning	

23. Audio system "Premium", Pioneer. Audio system "Premium", Pioneer.

MASTER INDEX

0	General	1-A02
2	Engine	1-C02
3A	Electrical systems, instruments	1-F02
4	Transmission	1-I02
5	Brakes	1-K02
6	Front assembly, Steering	1-L02
7	Suspension, Wheels	2-A02
8A	Body, external	2-B02
8B	Body, internal	2-F02
8C	Body, heating and ventilation	2-H02
8D	Tool, Labels	2-I02
9	Accessories	2-J02
10	Numerical register	3-A02

9 GROUP INDEX

Accessories engine	2-J06
Accessories electrical	2-J08
Accessories transmission	2-J20
Accessories steering	2-J22
Accessories chassis	2-J24
Accessories body	2-K04

2-J16

Mobile telephone
Mobiltelefon

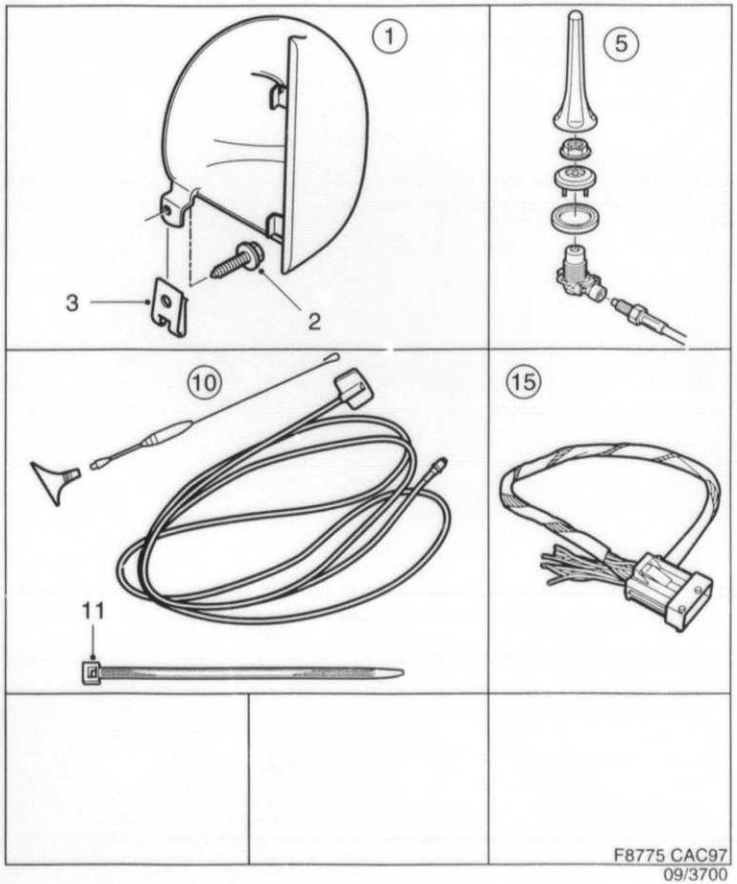

3700	Pos	Part No/Art nr	K S	Notes/Anmärkningar	Qty/ Antal	Description	Benämning	S L
0010	1	48 08 093		LHD, 40/400106415	1	Telephone handset holder	Telefonlurshållare	
0020	1	48 08 119		RHD, 40/400106423	1	Telephone handset holder	Telefonlurshållare	
0030	2	79 77 465			1	.Screw	.Skruv	5
0040	3	79 75 071			1	.Clip nut	.Klämmutter	5
0050								
0060	5	47 12 188		40/400106704	1	Antenna kit	Antennsats	
0070						roof mounting	takmontering	
0080		47 12 212			1	.Assembly instruction	.Monteringsanvisning	
0090								
0100	10	47 12 253		40/400106712	1	Antenna kit	Antennsats	
0110						glass mounting	glasmontering	
0120	11	79 71 880			5	.Tensioning band	.Spännband	4
0130		47 12 303			1	.Assembly instruction	.Monteringsanvisning	
0140								
0150	15	49 42 058		40/400108130	1	Cable harness	Ledningsnät	
0160						handsfree	handsfree	
0170		49 42 017			1	.Assembly instruction	.Monteringsanvisning	

MASTER INDEX

0	General	1-A02
2	Engine	1-C02
3A	Electrical systems, instruments	1-F02
4	Transmission	1-I02
5	Brakes	1-K02
6	Front assembly, Steering	1-L02
7	Suspension, Wheels	2-A02
8A	Body, external	2-B02
8B	Body, internal	2-F02
8C	Body, heating and ventilation	2-H02
8D	Tool, Labels	2-I02
9	Accessories	2-J02
10	Numerical register	3-A02

9 GROUP INDEX

Accessories engine	2-J06
Accessories electrical	2-J08
Accessories transmission	2-J20
Accessories steering	2-J22
Accessories chassis	2-J24
Accessories body	2-K04

2-J18

Electric equipment, other
Övr. elektrisk utrustning

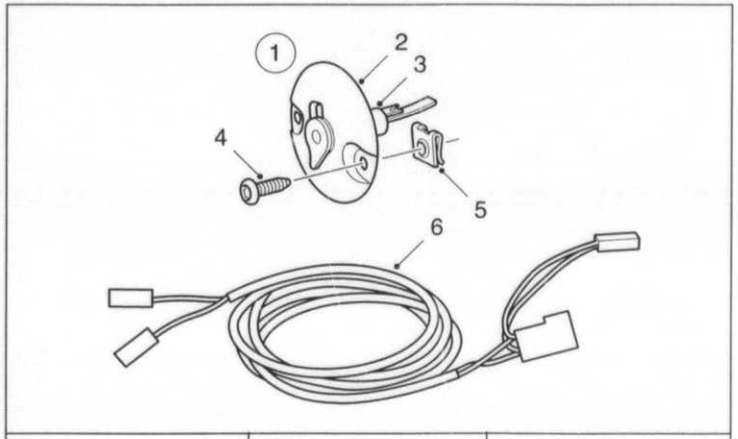

F8776 CAC97
09/3750

3750	Pos	Part No/Art nr	K S	Notes/Anmärkningar	Qty/ Antal	Description	Benämning	S L
0010	1	49 45 937		40/400109211	1	Power outlet	Eluttag	
0020						luggage compartment	bagagerum	
0030	2	86 84 573			1	.Frame	.Ram	
0040	3	86 85 216			1	.Power outlet	.Eluttag	
0050	4	79 77 002			2	.Screw	.Skruv	5
0060	5	94 26 909			2	.Nut	.Mutter	3
0070	6	86 85 232			1	.Cable harness	.Ledningsnät	3
0080								

MASTER INDEX

0	General	1-A02
2	Engine	1-C02
3A	Electrical systems, instruments	1-F02
4	Transmission	1-I02
5	Brakes	1-K02
6	Front assembly, Steering	1-L02
7	Suspension, Wheels	2-A02
8A	Body, external	2-B02
8B	Body, internal	2-F02
8C	Body, heating and ventilation	2-H02
8D	Tool, Labels	2-I02
9	Accessories	2-J02
10	Numerical register	3-A02

9 GROUP INDEX

Accessories engine	2-J06
Accessories electrical	2-J08
Accessories transmission	2-J20
Accessories steering	2-J22
Accessories chassis	2-J24
Accessories body	2-K04

2 -J20 Gear lever knob / Leather gaiter

Växelspaksknopp / Läderdamask

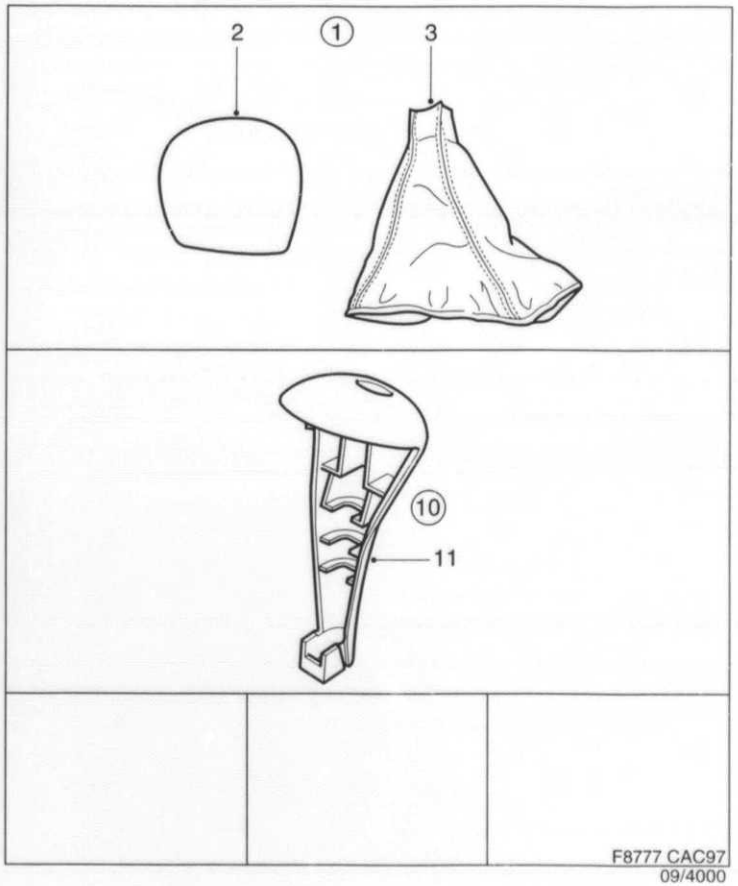

4000	Pos	Part No/Art nr	K S	Notes/Anmärkningar	Qty/ Antal	Description	Benämning	S L
0010	1	47 77 066		M, 40/400107108	1	Gear lever knob	Växelspaksknopp	
0020	2	47 77 074			1	.Gear lever knob leather	.Växelspaksknopp läder	
0030								
0040	3	45 79 801			1	.Gaiter	.Damask	3
0050		47 77 041			1	.Assembly instruction	.Monteringsanvisning	
0060								
0070	1	47 77 025		M, 40/400107124	1	Gear lever knob	Växelspaksknopp	
0080	2	45 77 755			1	.Gear lever knob wood	.Växelspaksknopp trä	
0090								
0100	3	45 79 801			1	.Gaiter	.Damask	3
0110		47 77 041			1	.Assembly instruction	.Monteringsanvisning	
0120								
0130	10	47 77 090		A, 40/400107090	1	Gear lever knob	Växelspaksknopp	
0140	11	47 77 108			1	.Gear lever knob leather	.Växelspaksknopp läder	
0141								
0145		47 77 017			1	.Assembly instruction	.Monteringsanvisning	
0160								
0170	10	47 77 009		A, 40/400107116	1	Gear lever knob	Växelspaksknopp	
0180	11	45 80 445			1	.Gear lever knob wood	.Växelspaksknopp trä	
0190								
0200		47 77 017			1	.Assembly instruction	.Monteringsanvisning	

MASTER INDEX

0	General	1-A02
2	Engine	1-C02
3A	Electrical systems, instruments	1-F02
4	Transmission	1-I02
5	Brakes	1-K02
6	Front assembly, Steering	1-L02
7	Suspension, Wheels	2-A02
8A	Body, external	2-B02
8B	Body, internal	2-F02
8C	Body, heating and ventilation	2-H02
8D	Tool, Labels	2-I02
9	Accessories	2-J02
10	Numerical register	3-A02

9 GROUP INDEX

Accessories engine	2-J06
Accessories electrical	2-J08
Accessories transmission	2-J20
Accessories steering	2-J22
Accessories chassis	2-J24
Accessories body	2-K04

2-J22 Steering wheel / Ratt

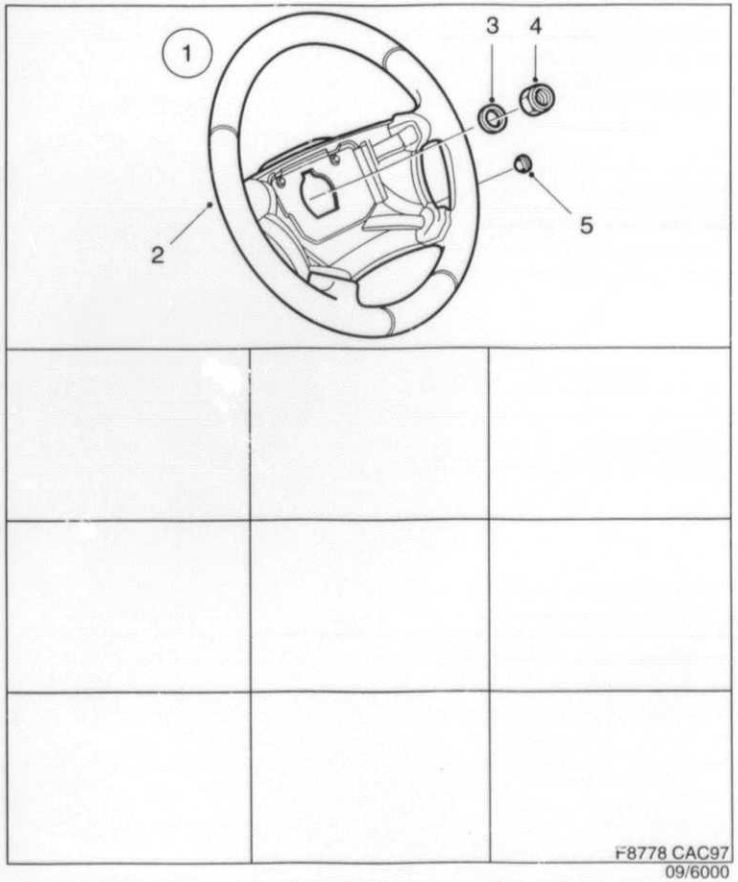

6000	Pos	Part No/Art nr	K S	Notes/Anmärkningar	Qty/ Antal	Description	Benämning	S L
0010	1	47 17 161		40/400106266	1	Wooden steering wheel	Träratt	
0020						leather/wood	läder/trä	
0025	2	47 17 179		1)	1	.Wooden steering wheel	.Träratt	
0030	3	80 30 058			1	.Washer	.Bricka	5
0040	4	89 54 315			1	.Nut	.Mutter	5
0050	5	45 06 143			2	.Cover	.Täcklock	

1. Not as separate spare part. Ej som separat reservdel.

MASTER INDEX

0	General	1-A02
2	Engine	1-C02
3A	Electrical systems, instruments	1-F02
4	Transmission	1-I02
5	Brakes	1-K02
6	Front assembly, Steering	1-L02
7	Suspension, Wheels	2-A02
8A	Body, external	2-B02
8B	Body, internal	2-F02
8C	Body, heating and ventilation	2-H02
8D	Tool, Labels	2-I02
9	Accessories	2-J02
10	Numerical register	3-A02

9 GROUP INDEX

Accessories engine	2-J06
Accessories electrical	2-J08
Accessories transmission	2-J20
Accessories steering	2-J22
Accessories chassis	2-J24
Accessories body	2-K04

2-J24

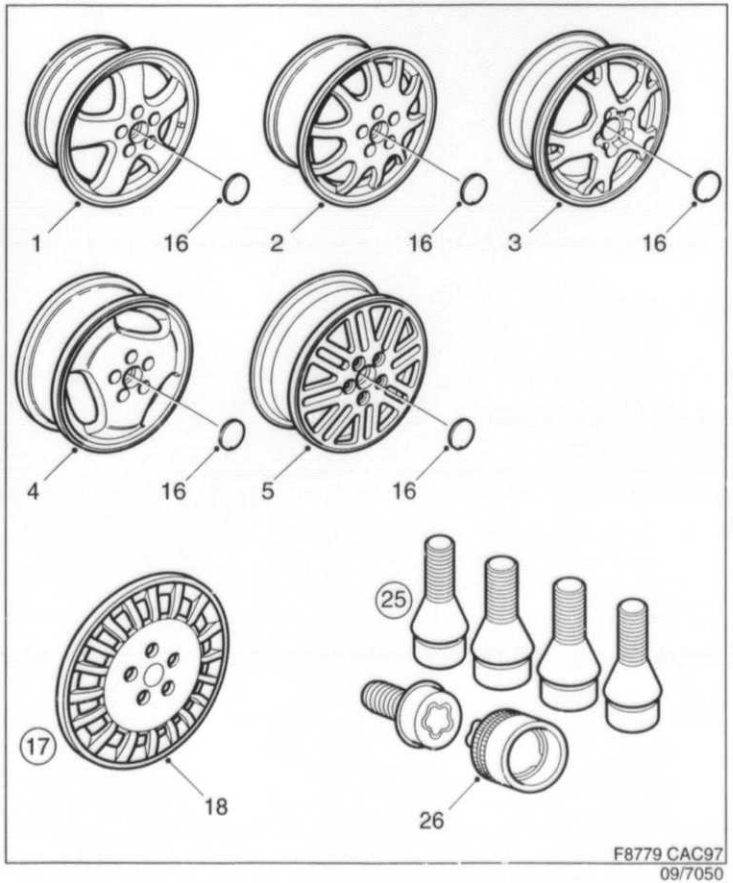

7050	Pos	Part No/Art nr	K S	Notes/Anmärkningar	Qty/ Antal	Description	Benämning	S L
0010	1	46 87 257		"FIVE SPOKE"	4	Rim	Fälg	
0020				6,5 X 16", 40/400106563				
0030								
0040	2	49 09 164		"TEN SPOKE "	4	Rim	Fälg	
0050				6,5 X 16", 40/400109583				
0060								
0070	3	46 89 634		"FIVE-SPLIT SPOKE"	4	Rim	Fälg	
0080				6,5 X 16", 40/400107025				
0090								
0112	4	45 66 055		"THREE SPOKE"	4	Rim	Fälg	
0114				6,5 X 16", 40/400108361				
0120								
0130	5	48 39 239		"LONG SPOKE"	4	Rim	Fälg	
0140				6,5 X 16", 40/400109336				
0150								
0500	16	45 66 311		40/400106522	4	Hub cap	Navkapsel	
0510								
0520	17	48 37 159		40/400106480	1	Wheel cap kit	Hjulkapselsats	
0530	18	45 66 030		40/400106548	4	.Wheel cap	.Hjulkapsel	
0540								
0700	25	86 82 437		40/400102166	1	Wheel screw set	Hjulskruvsats	
0710						lockable	låsbara	
0720				1)	4	.Wheel screw	.Hjulskruv	
0730	26	86 82 411		21), 40/400121040	1	.Key	.Nyckel	

1. Not as separate spare part. Ej som separat reservdel.
21. When ordering, the key number on the card must be stated. Vid beställning måste nyckelnumret på kodkortet anges.

MASTER INDEX

0	General	1-A02
2	Engine	1-C02
3A	Electrical systems, instruments	1-F02
4	Transmission	1-I02
5	Brakes	1-K02
6	Front assembly, Steering	1-L02
7	Suspension, Wheels	2-A02
8A	Body, external	2-B02
8B	Body, internal	2-F02
8C	Body, heating and ventilation	2-H02
8D	Tool, Labels	2-I02
9	Accessories	2-J02
10	Numerical register	3-A02

9 GROUP INDEX

Accessories engine	2-J06
Accessories electrical	2-J08
Accessories transmission	2-J20
Accessories steering	2-J22
Accessories chassis	2-J24
Accessories body	2-K04

2-K02

Level control

Nivåreglering

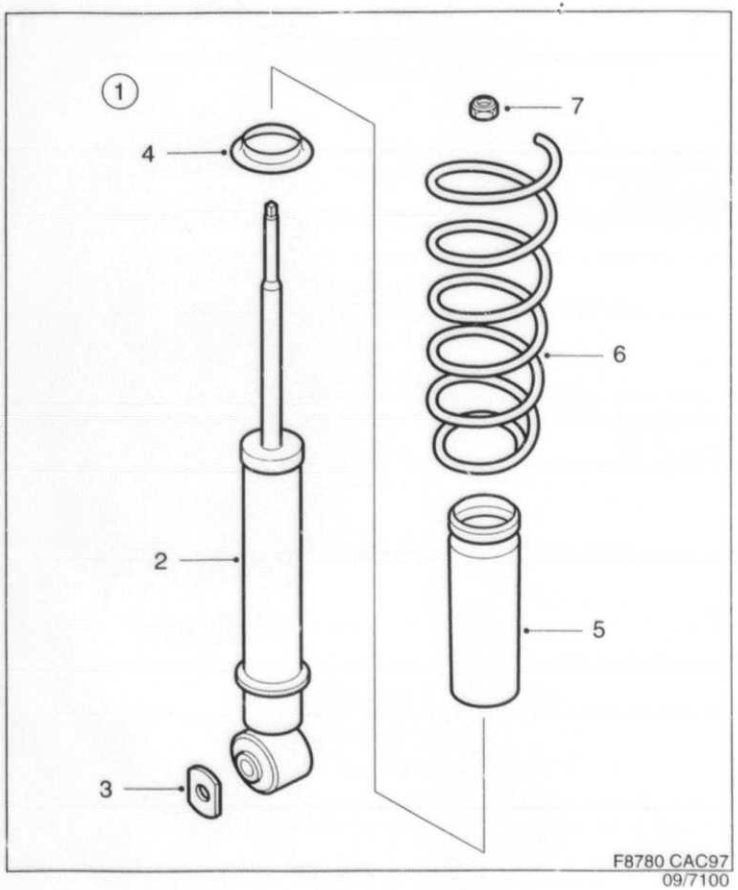

7100	Pos	Part No/Art nr	K S	Notes/Anmärkningar	Qty Antal	Description	Benämning	S L
0010	1	48 35 948		40/400107348	1	Levelling kit	Nivåregleringssats	
0020	2	46 86 101			2	.Shock absorber	.Stötdämpare	
0030	3	46 87 687			2	.Washer	.Bricka	
0040	4	46 87 679			2	.Spacer ring	.Distansring	
0050	5	48 35 930			2	.Bellows	.Bälg	
0060	6	45 66 741			2	.Spring	.Fjäder	
0070	7	*81 51 474*		NLS - USE 7977812	2	.Lock nut	.Låsmutter	5
0080		48 35 922			1	.Assembly instruction	.Monteringsanvisning	

MASTER INDEX

0	General	1-A02
2	Engine	1-C02
3A	Electrical systems, instruments	1-F02
4	Transmission	1-I02
5	Brakes	1-K02
6	Front assembly, Steering	1-L02
7	Suspension, Wheels	2-A02
8A	Body, external	2-B02
8B	Body, internal	2-F02
8C	Body, heating and ventilation	2-H02
8D	Tool, Labels	2-I02
9	Accessories	2-J02
10	Numerical register	3-A02

9 GROUP INDEX

Accessories engine	2-J06
Accessories electrical	2-J08
Accessories transmission	2-J20
Accessories steering	2-J22
Accessories chassis	2-J24
Accessories body	2-K04

2-K04

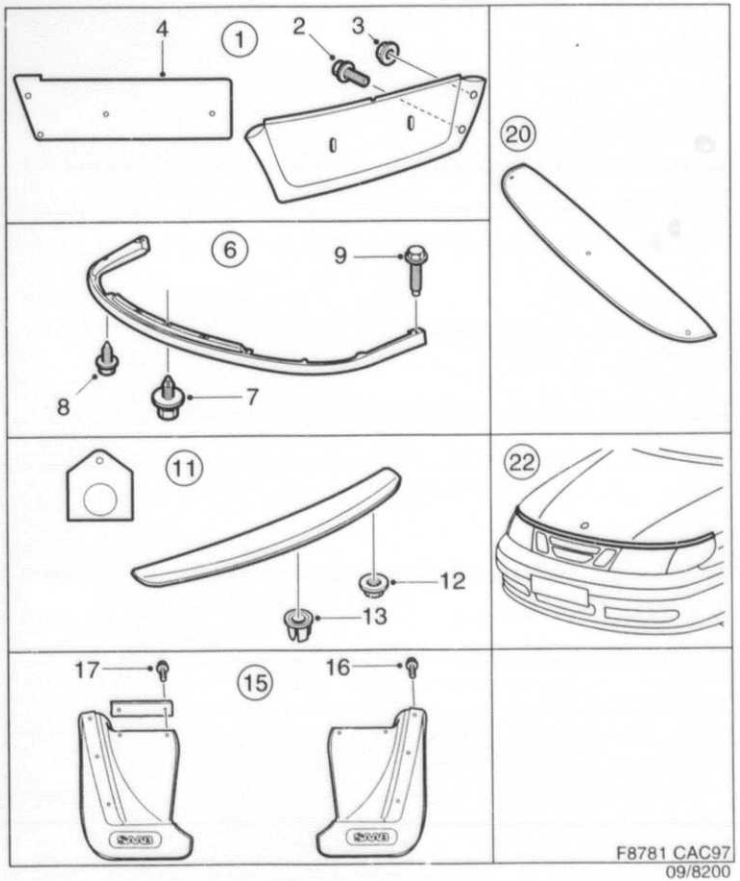

8200	Pos	Part No/Art nr	K S	Notes/Anmärkningar	Qty/ Antal	Description	Benämning	S L
0010	1	45 64 605		40/400106233	1	Decor panel	Dekorpanel	
0020	2	92 59 524			2	.Screw	.Skruv	5
0030	3	73 98 423			2	.Nut	.Mutter	5
0040	4	49 19 163			1	.Drill template	.Borrmall	
0050								
0060	6	45 64 571		2), 40/400106225	1	Spoiler	Spoiler	
0070	7	73 99 694			3	.Rivet	.Nit	3
0080	8	79 78 117			4	.Screw	.Skruv	5
0090	9	79 78 638			2	.Screw	.Skruv	5
0100								
0110	11	45 64 589		3), 40/400106217	1	Spoiler	Spoiler	
0120	12	79 77 929			4	.Nut	.Mutter	5
0130	13	40 13 454			1	.Clip	.Clips	5
0140								
0150	15	45 64 597		3), 40/400106191	1	Mudflap kit	Stänkskyddsats	
0160	16	79 69 314			6	.Screw	.Skruv	5
0170	17	*79 72 953*		NLS - USE 7922370, 8029944	4	.Screw	.Skruv	5
0170								
0180		46 77 241			1	.Assembly instruction	.Monteringsanvisning	
0190								
0200	20	48 53 321		40/400108049	1	Wind deflector	Vindavvisare	
0210								
0220	22	48 53 909		40/400108056	1	Guard	Skydd	

2. Front. Främre.
3. Rear. Bakre.

MASTER INDEX

0	General	1-A02
2	Engine	1-C02
3A	Electrical systems, instruments	1-F02
4	Transmission	1-I02
5	Brakes	1-K02
6	Front assembly, Steering	1-L02
7	Suspension, Wheels	2-A02
8A	Body, external	2-B02
8B	Body, internal	2-F02
8C	Body, heating and ventilation	2-H02
8D	Tool, Labels	2-I02
9	Accessories	2-J02
10	Numerical register	3-A02

9 GROUP INDEX

Accessories engine	2-J06
Accessories electrical	2-J08
Accessories transmission	2-J20
Accessories steering	2-J22
Accessories chassis	2-J24
Accessories body	2-K04

2-K06

Wooden panel
Träpanel

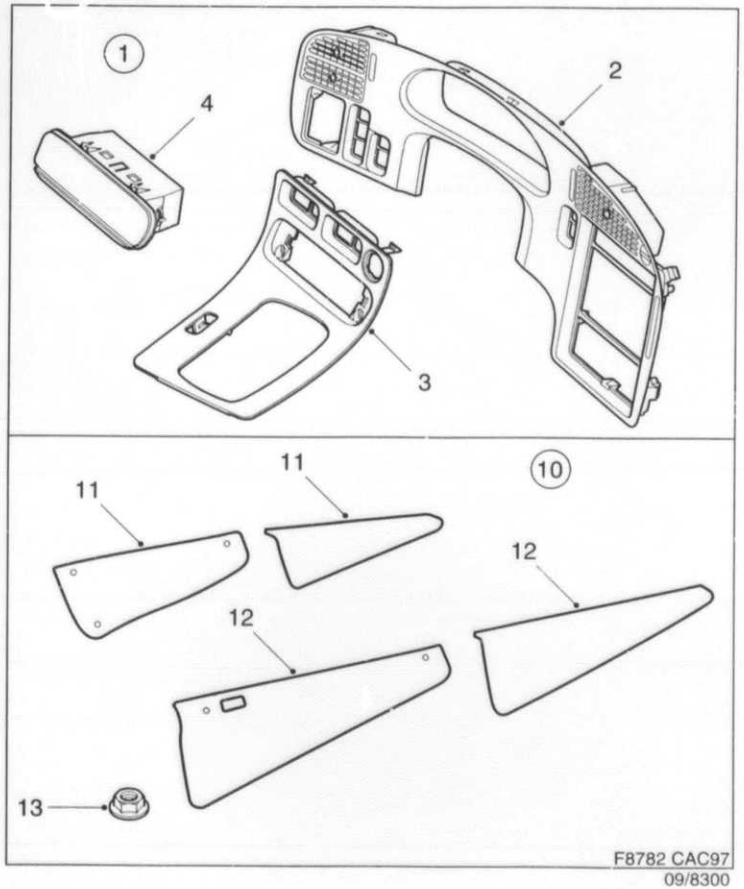

8300	Pos	Part No/Art nr	K S	Notes/Anmärkningar	Qty/ Antal	Description	Benämning	S L
0010	1	48 23 506		LHD, 40/400107454	1	Instrument plate	Instrumentplatta	
0020	1	48 23 514		RHD, 40/400107462	1	Instrument plate	Instrumentplatta	
0030	2	46 39 100		LHD	1	.Instrument plate	.Instrumentplatta	
0040	2	46 40 389		RHD	1	.Instrument plate	.Instrumentplatta	
0050	3	47 05 968		LHD	1	.Cover	.Avtäckning	
0060	3	47 05 992		RHD	1	.Cover	.Avtäckning	
0070	4	46 39 043			1	.Ashtray	.Askkopp	
0080		48 23 522			1	.Assembly instruction	.Monteringsanvisning	
0090								
0100	10	47 06 636		40/400106332	1	Wooden kit	Träsats	
0110	11	47 04 821		2), LH	1	.Wooden insert	.Träinlägg	
0120	11	47 04 839		2), RH	1	.Wooden insert	.Träinlägg	
0130	12	47 05 109		3), LH	1	.Wooden insert	.Träinlägg	
0140	12	47 05 117		3), RH	1	.Wooden insert	.Träinlägg	
0150	13	79 77 911			24	.Nut	.Mutter	5
0160		47 06 651			1	.Assembly instruction	.Monteringsanvisning	

2. Front. Främre.
3. Rear. Bakre.

MASTER INDEX

0	General	1-A02
2	Engine	1-C02
3A	Electrical systems, instruments	1-F02
4	Transmission	1-I02
5	Brakes	1-K02
6	Front assembly, Steering	1-L02
7	Suspension, Wheels	2-A02
8A	Body, external	2-B02
8B	Body, internal	2-F02
8C	Body, heating and ventilation	2-H02
8D	Tool, Labels	2-I02
9	Accessories	2-J02
10	Numerical register	3-A02

9 GROUP INDEX

Accessories engine	2-J06
Accessories electrical	2-J08
Accessories transmission	2-J20
Accessories steering	[illegible]
Accessories chassis	2-J24
Accessories body	2-K04

2-K08

Carpet — Matta

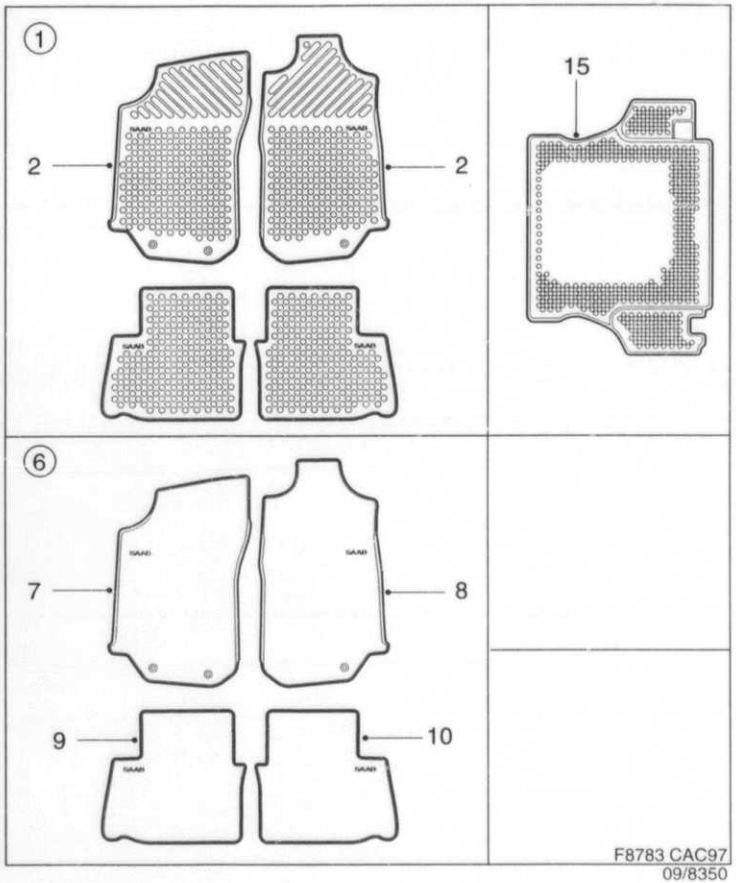

8350	Pos	Part No/Art nr	K S	Notes/Anmärkningar	Qty/ Antal	Description	Benämning	S L
0010	1	49 36 217		30), LHD, 40/400108189	1	Rubber mat set	Gummimattsats	
0015	1	49 36 209		40), LHD, 40/400108163	1	Rubber mat set	Gummimattsats	
0020	1	49 36 241		30), RHD, 40/400108197	1	Rubber mat set	Gummimattsats	
0025	1	49 36 233		40), RHD, 40/400108171	1	Rubber mat set	Gummimattsats	
0030	2	49 35 896		30), LH,LHD,40/400108221	1	.Rubber mat	.Gummimatta	
0035	2	49 35 888		40), LH,LHD,40/400108205	1	.Rubber mat	.Gummimatta	
0040	2	49 35 995		30), RH,RHD,40/400108239	1	.Rubber mat	.Gummimatta	
0045	2	49 35 987		40), RH,RHD,40/400108213	1	.Rubber mat	.Gummimatta	
0060								
0070	6	48 23 571		30), LHD, 40/400107363	1	Textile mat	Textilmatta	
0080	6	48 23 563		40), LHD, 40/400107355	1	Textile mat	Textilmatta	
0090	6	48 23 597		30), RHD, 40/400107389	1	Textile mat	Textilmatta	
0100	6	48 23 589		40), RHD, 40/400107371	1	Textile mat	Textilmatta	
0110	7	46 80 245		30),LH,LHD, 40/400107405	1	.Carpet	.Matta	6
0120	7	46 80 187		40),LH,LHD, 40/400107397	1	.Carpet	.Matta	6
0130	7	46 80 260		30), LH, RHD	1	.Carpet	.Matta	6
0140	7	46 80 203		40), LH, RHD	1	.Carpet	.Matta	6
0150	8	46 80 252		30), RH, LHD	1	.Carpet	.Matta	6
0160	8	46 80 195		40), RH, LHD	1	.Carpet	.Matta	6
0170	8	46 80 278		30),RH,RHD, 40/400107421	1	.Carpet	.Matta	6
0180	8	46 80 211		40),RH,RHD, 40/400107413	1	.Carpet	.Matta	6
0190	9	46 80 286		30), LH	1	.Carpet	.Matta	6
0200	9	46 80 229		40), LH	1	.Carpet	.Matta	6
0210	10	46 80 294		30), RH	1	.Carpet	.Matta	6
0220	10	46 80 237		40), RH	1	.Carpet	.Matta	6
0230		48 21 658			1	.Assembly instruction	.Monteringsanvisning	
0240								
0250	15	46 81 078		40/400106381	1	Luggage compartment mat	Bagagematta	
0260								

MASTER INDEX

0	General	1-A02
2	Engine	1-C02
3A	Electrical systems, instruments	1-F02
4	Transmission	1-I02
5	Brakes	1-K02
6	Front assembly, Steering	1-L02
7	Suspension, Wheels	2-A02
8A	Body, external	2-B02
8B	Body, internal	2-F02
8C	Body, heating and ventilation	2-H02
8D	Tool, Labels	2-I02
9	Accessories	2-J02
10	Numerical register	3-A02

9 GROUP INDEX

Accessories engine	2-J06
Accessories electrical	2-J08
Accessories transmission	2-J20
Accessories steering	2-J22
Accessories chassis	2-J24
Accessories body	2-K04

2-K10

Head restraint
Head restraint cover

Nackstöd
Nackstödspåse

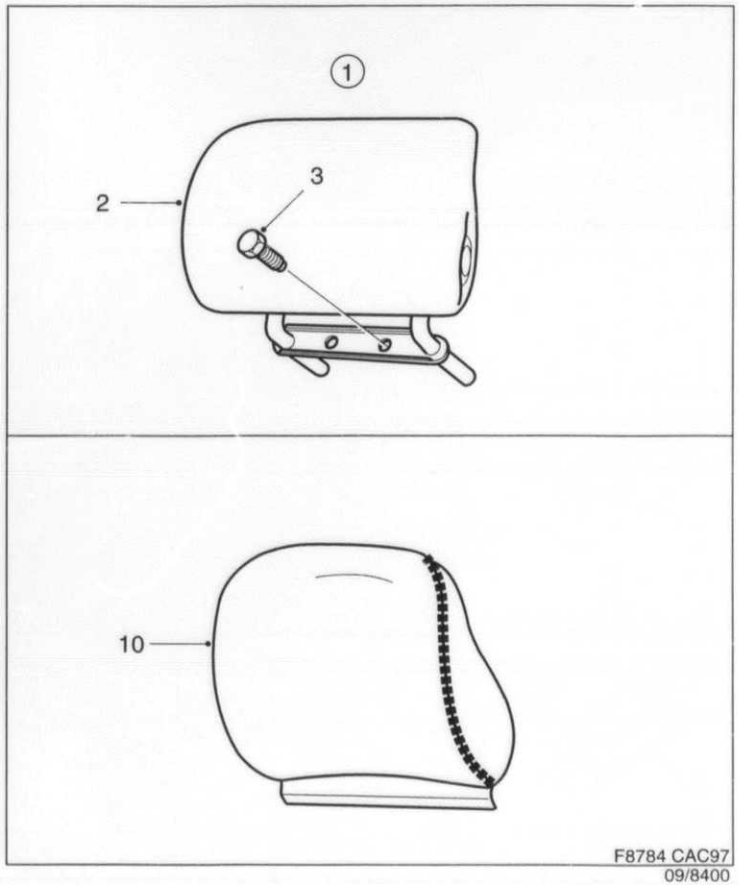

8400	Pos	Part No/Art nr	K S	Notes/Anmärkningar	Qty/ Antal	Description	Benämning	S L
0010	1	48 04 530		40/400107470	1	Head restraint	Nackstöd	
0020	2	48 42 332			1	.Head restraint	.Nackskydd	
0030	3	79 78 455			2	.Screw	.Skruv	5
0040		48 04 548			1	.Assembly instruction	.Monteringsanvisning	
0050								
0060	10	48 02 674		30), TRIM COLOUR L02	1	Head restraint cover	Nackstödspåse	
0070				40/400107496				
0080	10	48 02 666		40), TRIM COLOUR K02	1	Head restraint cover	Nackstödspåse	
0090				40/400107488				
0100	10	48 02 690		30), TRIM COLOUR L03	1	Head restraint cover	Nackstödspåse	
0110				40/400107512				
0120	10	48 02 682		40), TRIM COLOUR K03	1	Head restraint cover	Nackstödspåse	
0130				40/400107504				
0140	10	48 02 716		30), TRIM COLOUR L04	1	Head restraint cover	Nackstödspåse	
0150				40/400107538				
0160	10	48 02 708		40), TRIM COLOUR K04	1	Head restraint cover	Nackstödspåse	
0170				40/400107520				

MASTER INDEX

0	General	1-A02
2	Engine	1-C02
3A	Electrical systems, instruments	1-F02
4	Transmission	1-I02
5	Brakes	1-K02
6	Front assembly, Steering	1-L02
7	Suspension, Wheels	2-A02
8A	Body, external	2-B02
8B	Body, internal	2-F02
8C	Body, heating and ventilation	2-H02
8D	Tool, Labels	2-I02
9	Accessories	2-J02
10	Numerical register	3-A02

9 GROUP INDEX

Accessories engine	2-J06
Accessories electrical	2-J08
Accessories transmission	2-J20
Accessories steering	2-J22
Accessories chassis	2-J24
Accessories body	2-K04

2-K12

Other interior equipment
Övrig invändig utrustning

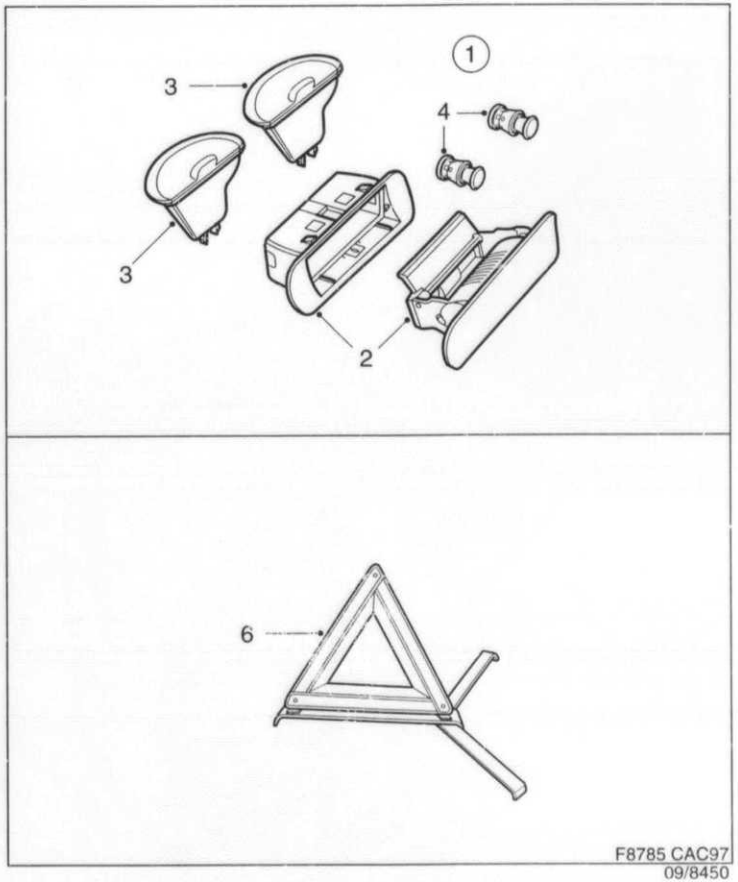

8450	Pos	Part No/Art nr	K S	Notes/Anmärkningar	Qty/ Antal	Description	Benämning	S L
0010	1	48 23 662		30), 40/400107447	1	Ashtray kit	Askkoppsats	
0020	1	48 23 613		40), 40/400107439	1	Ashtray kit	Askkoppsats	
0030	2	46 15 696			1	.Ashtray	.Askkopp	
0040	3	48 19 314		30)	2	.Ashtray	.Askkopp	
0050	3	48 19 306		40)	2	.Ashtray	.Askkopp	
0060	4	85 59 221			2	.Lighter unit	.Tändarenhet	4
0070		48 23 670			1	.Assembly instruction	.Monteringsanvisning	
0080								
0090	6	42 66 003		40/115108003	1	Warning triangle	Varningstriangel	6

MASTER INDEX

0	General	1-A02
2	Engine	1-C02
3A	Electrical systems, instruments	1-F02
4	Transmission	1-I02
5	Brakes	1-K02
6	Front assembly, Steering	1-L02
7	Suspension, Wheels	2-A02
8A	Body, external	2-B02
8B	Body, internal	2-F02
8C	Body, heating and ventilation	2-H02
8D	Tool, Labels	2-I02
9	Accessories	2-J02
10	Numerical register	3-A02

9 GROUP INDEX

Accessories engine	2-J06
Accessories electrical	2-J08
Accessories transmission	2-J20
Accessories steering	2-J22
Accessories chassis	2-J24
Accessories body	2-K04

2-K14 Towing hitch / Draganordning

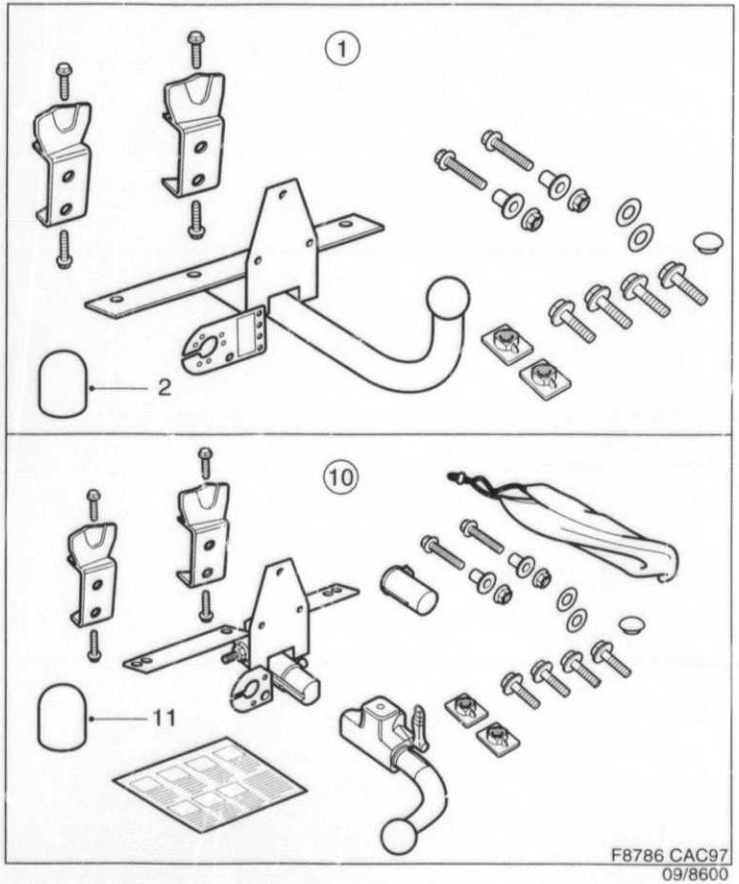

8600	Pos	Part No/Art nr	K S	Notes/Anmärkningar	Qty/ Antal	Description	Benämning	S L
0010	1	45 99 817		EU, 40/400105771	1	Towing hitch	Draganordning	
0012	1	47 24 688		AU, 40/400107231	1	Towing hitch	Draganordning	
0015	1	48 27 028		22), 40/400107736	1	Towing hitch	Draganordning	
0020	2	86 67 719		40/117101014	1	.Ball guard	.Kulskydd	
0030								
0040	10	45 99 841		EU, 40/400105789	1	Towing hitch	Draganordning	
0050	10	48 27 036		22), 40/400107744	1	Towing hitch	Draganordning	
0060	11	86 67 719		40/117101014	1	.Ball guard	.Kulskydd	

22. Cars with automatic level control Bilar med automatisk nivåkontroll

MASTER INDEX

0	General	1-A02
2	Engine	1-C02
3A	Electrical systems, instruments	1-F02
4	Transmission	1-I02
5	Brakes	1-K02
6	Front assembly, Steering	1-L02
7	Suspension, Wheels	2-A02
8A	Body, external	2-B02
8B	Body, internal	2-F02
8C	Body, heating and ventilation	2-H02
8D	Tool, Labels	2-I02
9	Accessories	2-J02
10	Numerical register	3-A02

9 GROUP INDEX

Accessories engine	2-J06
Accessories electrical	2-J08
Accessories transmission	2-J20
Accessories steering	2-J22
Accessories chassis	2-J24
Accessories body	2-K04

Accessories body

Tillbehör kaross

2-K16

Cable harness kit

Ledningsnätssats

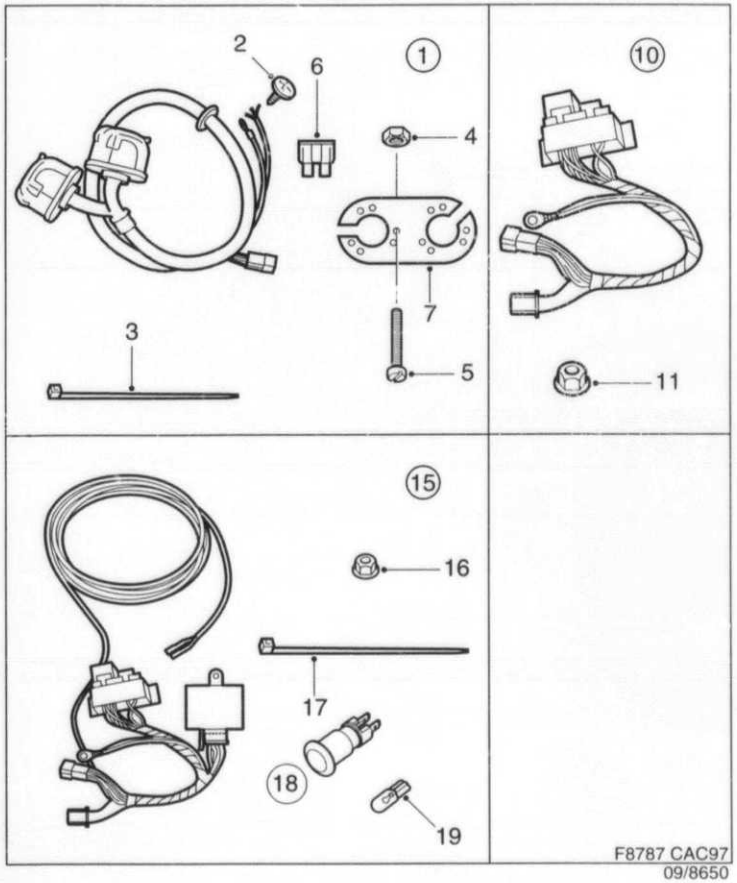

8650	Pos	Part No/Art nr	K S	Notes/Anmärkningar	Qty/ Antal	Description	Benämning	S L
0010	1	48 05 073		40/400106274	1	Cable harness kit	Ledningsnätssats	
0020						7-pole	7-polig	
0030	1	48 05 099		40/400106282	1	Cable harness kit	Ledningsnätssats	
0040						13-pole	13-polig	
0050	1	48 07 004		40/400106290	1	Cable harness kit	Ledningsnätssats	
0060						7+7-pole	7+7-polig	
0070	2	79 22 495			1	.Screw	.Skruv	5
0080	3	79 71 864			3	.Tensioning band	.Spännband	5
0090	4	79 73 365			3	.Nut	.Mutter	5
0100	4	79 73 365			6	.Nut	.Mutter	5
0110						7+7-pole	7+7-polig	
0120	5	80 59 461			3	.Screw	.Skruv	5
0130	5	80 59 461			6	.Screw	.Skruv	5
0140						7+7-pole	7+7-polig	
0150	6	79 74 660			1	.Fuse	.Säkring	1
0160	7	47 23 755		40/400109062	1	.Connector holder	.Kontakthållare	
0170						7+7-pole	7+7-polig	
0180								
0190	10	48 05 115		40/400106308	1	Cable harness kit	Ledningsnätssats	
0200						charging	laddning	
0210	11	40 87 128			2	.Plastic nut	.Plastmutter	5
0220								
0230	15	48 05 131		40/400106316	1	Cable harness kit	Ledningsnätssats	
0240						signal monitoring	signalövervakning	
0250	15	48 07 012		40/400106324	1	Cable harness kit	Ledningsnätssats	
0260						charging	laddning	
0270						signal monitoring	signalövervakning	
0280	16	40 87 128			X	.Plastic nut	.Plastmutter	5
0290	17	79 71 880			5	.Tensioning band	.Spännband	4
0300	18	86 79 243			1	.Indicating lamp	.Indikeringslampa	
0310	19	85 00 613			1	..Bulb	..Glödlampa	2

MASTER INDEX

0	General	1-A02
2	Engine	1-C02
3A	Electrical systems, instruments	1-F02
4	Transmission	1-I02
5	Brakes	1-K02
6	Front assembly, Steering	1-L02
7	Suspension, Wheels	2-A02
8A	Body, external	2-B02
8B	Body, internal	2-F02
8C	Body, heating and ventilation	2-H02
8D	Tool, Labels	2-I02
9	Accessories	2-J02
10	Numerical register	3-A02

9 GROUP INDEX

Accessories engine	2-J06
Accessories electrical	2-J08
Accessories transmission	2-J20
Accessories steering	2-J22
Accessories chassis	2-J24
Accessories body	2-K04

2-K18

Climate control
Engine heater

Klimatsystem
Motorvärmare

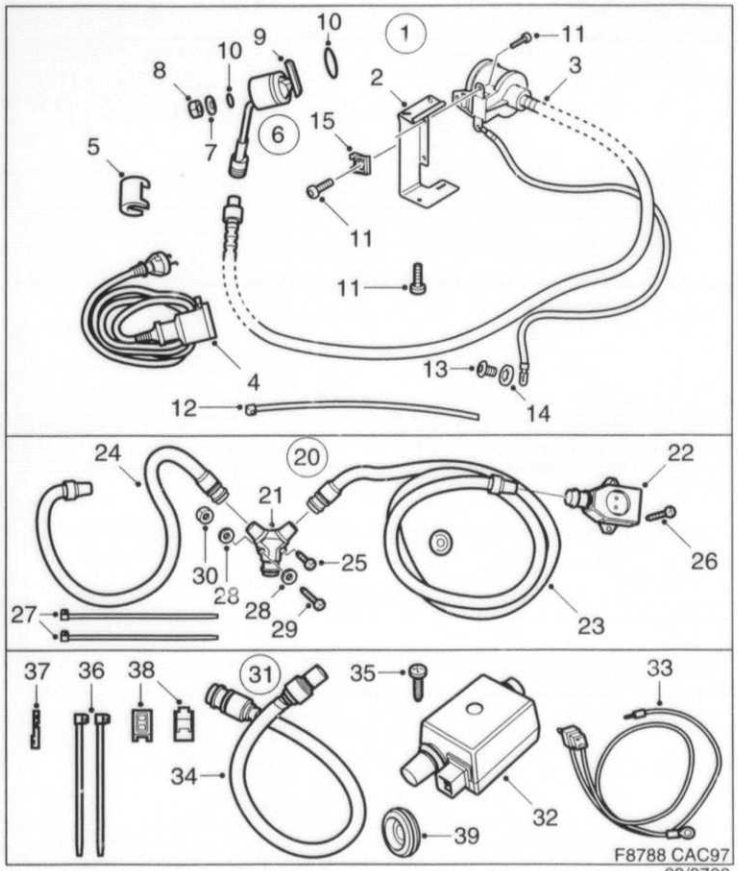

8700	Pos	Part No/Art nr	K S	Notes/Anmärkningar	Qty/ Antal	Description	Benämning	S L
0010	1	47 53 935		4-CYL, 40/400107645	1	Engine heater kit	Motorvärmarsats	
0020	2	47 53 901		40/400107652	1	.Bracket	.Konsol	
0030	3	49 61 041		40/400109245	1	.Connecting cable	.Imagsledning	
0040	4	86 77 908		40/260266002	1	.Extension cable	.Anslutningskabel	
0050	5	86 77 916		40/260147038	1	.Retaining clip	.Låsklammer	
0060	6	*86 78 906*		40/260135017 NLS	1	.Heater	.Värmeelement	
0070	7	*80 29 936*		NLS - USE 9166356	1	..Washer	..Bricka	5
0080	8	80 74 098			1	..Nut	..Mutter	5
0090	9	86 78 914		40/400101168	1	..Brace	..Bygel	
0100	10	86 78 922		40/260147053	1	..O-ring kit	..O-ringsats	
0110	11	79 22 388			7	.Screw	.Skruv	5
0120	12	79 71 880			5	.Tensioning band	.Spännband	4
0130	13	*84 41 503*		NLS - USE 7970601	1	.Screw	.Skruv	5
0140	14	79 15 556			1	.Star washer	.Taggbricka	5
0160	15	79 72 573			1	.Clip nut	.Clipsmutter	5
0170								
0180	20	47 59 015		L=2M, 40/400107181	1	Branch contact	Grenkontakt	
0190	21	47 58 884		40/260274006	1	.Branch contact	.Grenkontakt	
0200	22	47 58 892		40/260271002	1	.Switch	.Kupevägguttag	
0210	23	47 58 918		L=2M, 40/400107249	1	.Junction cable	.Skarvkabel	
0220	24	47 59 874		L=1M, 40/400107777	1	.Junction cable	.Skarvkabel	
0230	25	79 22 404		900,9000	2	.Screw	.Skruv	
0240	26	79 70 536			2	.Screw	.Skruv	6
0250	27	79 71 880			10	.Tensioning band	.Spännband	4
0265	28	79 73 894			1	.Washer	.Bricka	5
0270	29	80 59 461			2	.Screw	.Skruv	5
0280	30	80 74 270			2	.Lock nut	.Låsmutter	3
0290								
0300	31	47 59 023		40/400107199	1	Timer kit	Tidursats	
0310	32	47 58 959		40/260278007	1	.Relay	.Relä	
0320	33	47 58 967		40/400107272	1	.Cable harness	.Ledningsnät	
0330	34	47 59 874		L=1M, 40/400107777	1	.Junction cable	.Skarvkabel	
0340	35	79 22 404			1	.Screw	.Skruv	
0350	36	79 71 880			5	.Tensioning band	.Spännband	4
0360	37	91 20 684			1	.Cable terminal	.Kabelsko	5
0370	38	95 60 012			1	.Cable joint	.Ledningsförbindning	3
0375	39	79 61 329			1	.Grommet	.Genomföring	5
0380								

MASTER INDEX

0	General	1-A02
2	Engine	1-C02
3A	Electrical systems, instruments	1-F02
4	Transmission	1-I02
5	Brakes	1-K02
6	Front assembly, Steering	1-L02
7	Suspension, Wheels	2-A02
8A	Body, external	2-B02
8B	Body, internal	2-F02
8C	Body, heating and ventilation	2-H02
8D	Tool, Labels	2-I02
9	Accessories	2-J02
10	Numerical register	3-A02

9 GROUP INDEX

Accessories engine	2-J06
Accessories electrical	2-J08
Accessories transmission	2-J20
Accessories steering	2-J22
Accessories chassis	2-J24
Accessories body	2-K04

2 -K20

Climate control
Parking heater

Klimatsystem
Motor-/kupevärmare

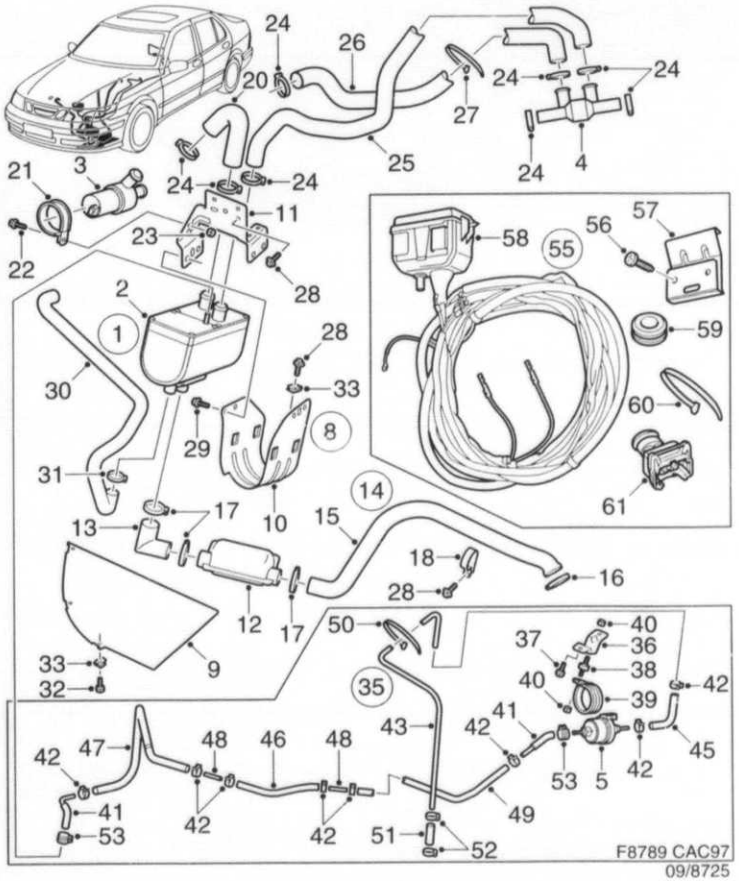

8725	Pos	Part No/Art nr	K S	Notes/Anmärkningar	Qty/ Antal	Description	Benämning	S L
0010	1	45 77 821		40/400106621	X	Heater	Värmare	
0020	2	45 77 946		40/400106795	1	.Heater	.Värmare	
0030	3	43 95 612			1	.Coolant pump	.Kylvätskepump	2
0040	4	46 72 333		40/400106829	1	.Non-return valve	.Backventil	
0050	5	48 99 951		40/400109260	1	.Fuel pump	.Bränslepump	
0060								
0070	8	45 77 839		40/400106839	X	Mounting kit	Monteringssats	
0080	9	46 72 408		40/400106852	1	.Bracket	.Konsol	
0090	10	45 77 961		40/400106845	1	.Cradle	.Vagga	
0100	11	45 77 953		40/400106837	1	.Bracket	.Konsol	
0120	12	46 23 351		40/400106926	1	.Silencer	.Ljuddämpare	
0130	13	47 54 883		40/	1	.Exhaust pipe	.Avgasrör	
0140	14	47 26 519		40/400109278	1	.Exhaust pipe	.Avgasrör	
0150	15	46 72 382		40/400106894	1	..Exhaust pipe	..Avgasrör	
0160	16	48 99 902		40/400109310	1	..Sleeve	..Hylsa	
0165	17	49 40 433		40/400109286	3	.Hose clamp	.Slangklamma	5
0166	18	79 69 462			1	.Clamp	.Klammer	5
0170	20	46 72 424		40/400406886	1	.Hose	.Slang	
0180	21	46 85 400		40/400106910	1	.Clamp	.Klämma	
0190	22	79 78 133			1	.Screw	.Skruv	5
0200	23	79 77 929			1	.Nut	.Mutter	5
0210	24	79 70 072			8	.Hose clamp	.Slangklamma	5
0220	25	46 72 317		40/400106878	1	.Hose	.Slang	
0230	26	45 77 995		40/400106860	1	.Hose	.Slang	
0240	27	79 71 880			2	.Tensioning band	.Spännband	4
0250	28	79 78 638			8	.Screw	.Skruv	5
0260	29	79 78 182			4	.Screw	.Skruv	5
0270	30	47 26 337		40/400106902	1	.Inlet manifold	.Insugningsrör	
0280	31	79 70 064			1	.Hose clamp	.Slangklamma	5
0290	32	79 70 536			3	.Screw	.Skruv	6
0300	33	79 67 995			4	.Clip nut	.Clipsmutter	3
0310								
0320	35	45 77 847		40/400106647	X	Fuel connection	Bränsleanslutning	
0330	36	46 72 432		40/400106985	1	.Bracket	.Konsol	
0340	37	79 78 638			2	.Screw	.Skruv	5
0350	38	42 35 768			1	.Rubber spacer	.Gummidistans	4
0360	39	46 85 392		40/400106993	1	.Clamp	.Klämma	
0370	40	79 77 929			2	.Nut	.Mutter	5
0380	41	45 28 568		40/400108148	2	.Junction hose	.Skarvslang	
0390	42	48 99 894		40/400109294	8	.Hose clamp	.Slangklamma	5
0400	43	47 25 875		40/400106977	1	.Fuel pipe	.Bränsleledning	
0410	45	47 29 844		40/400108155	1	.Junction hose	.Skarvslang	
0420	46	47 29 448		40/400106951	1	.Fuel pipe	.Bränsleledning	
0430	47	46 72 358		40/400106944	1	.Fuel pipe	.Bränsleledning	
0440	48	47 52 606		40/400108270	2	.Junction hose	.Skarvslang	
0450	49	47 29 547		40/400106969	1	.Fuel pipe	.Bränsleledning	
0460	50	79 71 880			10	.Tensioning band	.Spännband	4
0470	51	48 95 942		40/260312236	1	.Tank connection	.Tankanslutning	
0480	52	79 73 522			2	..Hose clamp	..Slangklamma	5
0485	53	79 84 768			2	.Clamp	.Klamma	5
0490								
0500	55	47 26 493		40/400106654	X	Socket	Elanslutning	
0510	56	47 39 918		40/400107017	1	.Bracket	.Konsol	
0520	57	79 70 601			2	.Screw	.Skruv	5
0530	58	47 39 447		40/400107009	1	.Cable harness	.Ledningsnät	
0540	59	79 61 329			2	.Grommet	.Genomföring	5
0550	60	79 71 880			11	.Tensioning band	.Spännband	4
0560	61	41 78 414			1	.Connector housing	.Kontakthus	8

MASTER INDEX

0	General	1-A02
2	Engine	1-C02
3A	Electrical systems, instruments	1-F02
4	Transmission	1-I02
5	Brakes	1-K02
6	Front assembly, Steering	1-L02
7	Suspension, Wheels	2-A02
8A	Body, external	2-B02
8B	Body, internal	2-F02
8C	Body, heating and ventilation	2-H02
8D	Tool, Labels	2-I02
9	Accessories	2-J02
10	Numerical register	3-A02

9 GROUP INDEX

Accessories engine	2-J06
Accessories electrical	2-J08
Accessories transmission	2-J20
Accessories steering	2-J22
Accessories chassis	2-J24
Accessories body	2-K04

2-K22 Climate control / Air conditioning

Klimatsystem / Luftkonditionering

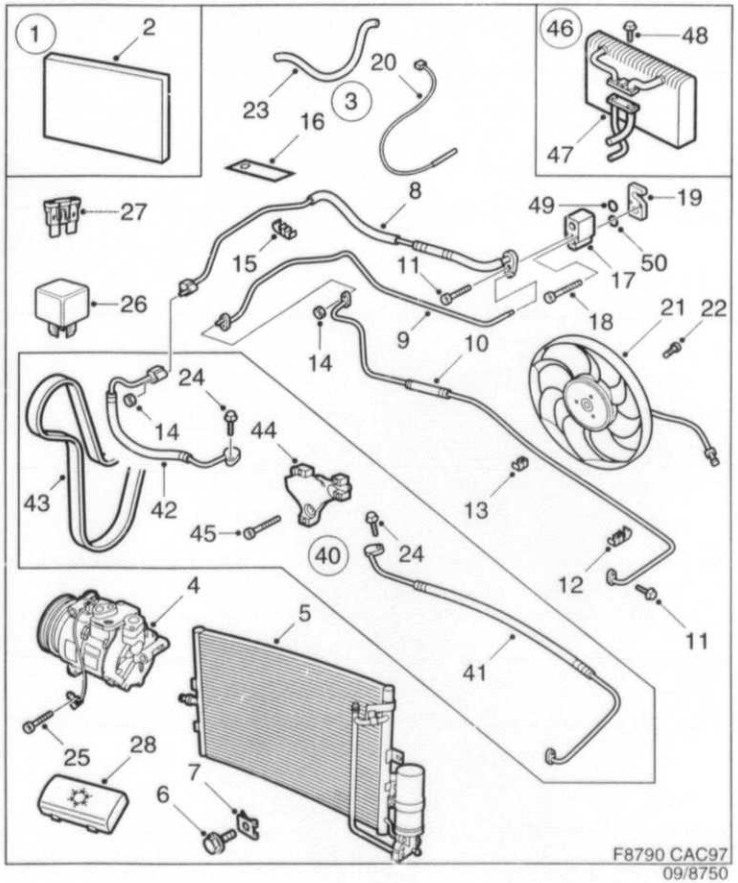

8750	Pos	Part No/Art nr	K S	Notes/Anmärkningar	Qty/ Antal	Description	Benämning	S L
0010	1	47 56 946		40/400107637	1	Compartment filter	Kupefilter	
0015						carbon	kol	
0020	2	45 41 538			1	.Compartment filter	.Kupefilter	2
0030		47 56 953			1	.Assembly instruction	.Monteringsanvisning	
0040								
0050	3	74 95 872		40/400107132	1	Air conditioning kit	Luftkonditioneringssats	
0060	4	45 41 207			1	.Compressor	.Kompressor	5
0070	5	45 41 215			1	.Condenser	.Kondensor	5
0080	6	79 76 947			2	.Screw	.Skruv	5
0090	7	82 67 098			2	.Clip	.Clips	5
0100	8	45 41 249			1	.Tube	.Rör	6
0110	9	45 41 256			1	.Tube	.Rör	6
0120	10	45 41 264			1	.Tube	.Rör	6
0130	11	79 82 325			2	.Screw	.Skruv	5
0140	12	46 33 715			1	.Clip	.Clips	5
0150	13	46 33 202			1	.Clip	.Clips	5
0160	14	79 77 929			2	.Nut	.Mutter	5
0170	15	46 33 210			2	.Clip	.Clips	5
0180	16	47 56 961			1	.Label	.Etikett	5
0190	17	46 33 681			1	.Expansion valve	.Expansionsventil	5
0200	18	47 57 563			2	.Screw	.Skruv	5
0210	19	47 57 555			1	.Washer	.Bricka	5
0220	20	45 41 306			1	.Thermo contact	.Termokontakt	4
0230	21	45 76 443			1	.Fan unit	.Fläktenhet	4
0240	22	79 77 689			3	.Screw	.Skruv	5
0250	23	45 42 148			1	.Duct	.Kanal	6
0260	24	79 78 224			2	.Screw	.Skruv	5
0270	25	79 82 960			3	.Hexagon screw	.Sexkantsskruv	5
0280	26	85 33 176			2	.Relay	.Relä	3
0290	27	79 74 645		15A	1	.Fuse	.Säkring	1
0300	27	79 74 660		25A	1	.Fuse	.Säkring	1
0310	28				1	.	.	
0340								
0350	40	74 95 898		4-CYL, 40/400107157	1	Additional kit	Tilläggssats	
0355						hoses	slangar	
0360	41	45 42 429			1	.Hose assembly	.Slangledning	6
0370	42	45 42 197			1	.Hose assembly	.Slangledning	6
0380	43	45 75 395			1	.Belt	.Rem	1
0390	44	46 70 717			1	.Bracket	.Konsol	5
0400	45	79 78 323			3	.Screw	.Skruv	5
0410								
0420	46	74 95 914		LHD, 40/400107173	1	Additional kit	Tilläggssats	
0430	46	74 95 906		RHD, 40/400107165	1	Additional kit	Tilläggssats	
0440						evaporator	förångare	
0445	47	74 95 658		LHD	1	.Evaporator	.Förångare	5
0450	47	74 95 690		RHD	1	.Evaporator	.Förångare	5
0460	48	74 95 997			1	.Screw	.Skruv	5
0470	49	48 69 129			1	.O-ring	.O-ring	2
0480	50	48 69 020			1	.O-ring	.O-ring	2

MASTER INDEX

0	General	1-A02
2	Engine	1-C02
3A	Electrical systems, instruments	1-F02
4	Transmission	1-I02
5	Brakes	1-K02
6	Front assembly, Steering	1-L02
7	Suspension, Wheels	2-A02
8A	Body, external	2-B02
8B	Body, internal	2-F02
8C	Body, heating and ventilation	2-H02
8D	Tool, Labels	2-I02
9	Accessories	2-J02
10	Numerical register	3-A02

9 GROUP INDEX

Accessories engine	2-J06
Accessories electrical	2-J08
Accessories transmission	2-J20
Accessories steering	2-J22
Accessories chassis	2-J24
Accessories body	2-K04

2 -K24

Safety — *Säkerhet*

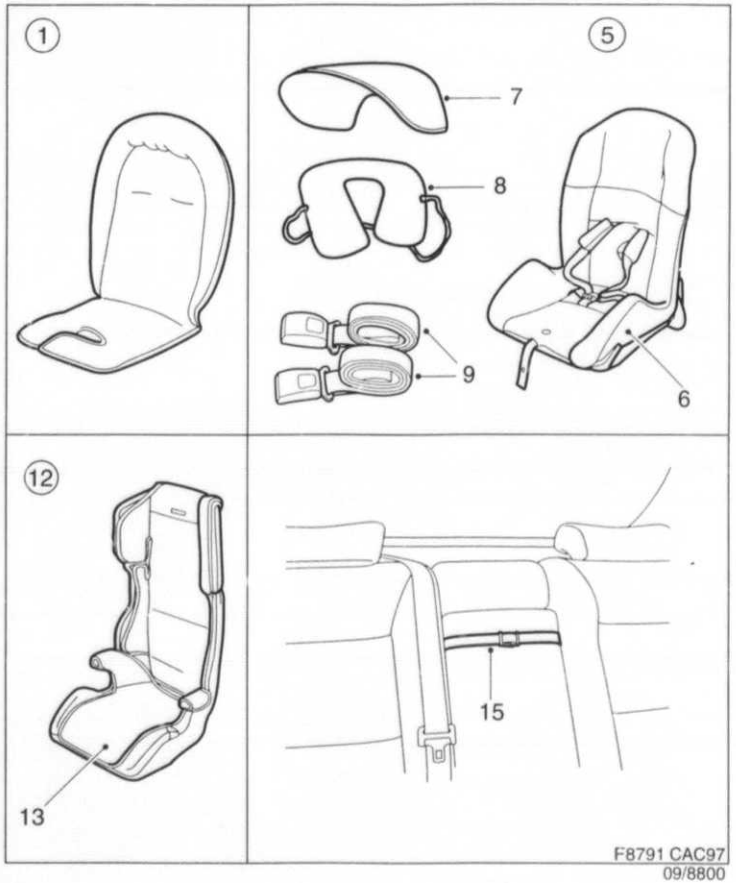

8800	Pos	Part No/Art nr	K S	Notes/Anmärkningar	Qty/ Antal	Description	Benämning	S L
0010	1	50 09 287		SE, EU, GB, JP	1	Child seat	Barnstol	
0020				40/400108254				
0040								
0050	5	47 61 284		SE, EU, GB, JP	1	Child seat	Barnstol	
0060				40/400105979				
0070	6	48 45 806		40/400107678	1	.Upholstery	.Klädsel	
0080	7	47 62 225		40/400107686	1	Sun visor	Solskydd	
0090	8	47 62 233		40/400107694	1	Head restraint	Nackstöd	
0100	9	47 62 217		40/400107710	1	Mounting strap	Fästband	
0110								
0120	12	47 61 292		SE, EU, GB, JP	1	Child seat	Barnstol	
0130				40/400105987				
0140	13	48 45 814		40/400107702	1	.Upholstery	.Klädsel	
0150								
0160	15	50 09 295		40/400108262	1	Arm rest retainer	Armstödhållare	

MASTER INDEX

0	General	1-A02
2	Engine	1-C02
3A	Electrical systems, instruments	1-F02
4	Transmission	1-I02
5	Brakes	1-K02
6	Front assembly, Steering	1-L02
7	Suspension, Wheels	2-A02
8A	Body, external	2-B02
8B	Body, internal	2-F02
8C	Body, heating and ventilation	2-H02
8D	Tool, Labels	2-I02
9	Accessories	2-J02
10	Numerical register	3-A02

9 GROUP INDEX

Accessories engine	2-J06
Accessories electrical	2-J08
Accessories transmission	2-J20
Accessories steering	2-J22
Accessories chassis	2-J24
Accessories body	2-K04

2-L02

Touch-up paint

Bättringsfärg

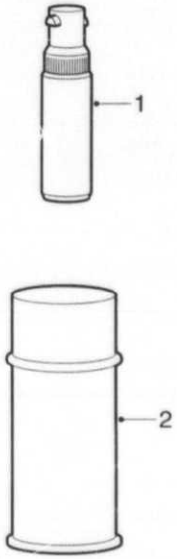

F8792 CAC97
09/8850

8850	Pos	Part No/Art nr	K S	Notes/Anmärkningar	Qty/ Antal	Description	Benämning	S L
0010						Solid	Solid	
0020								
0030	1	48 60 672		BC 153, 40/400108569	X	Touch-up pen	Lackstift	
0040				(40/382562007)		Cirrus white	Cirrusvit	
0050	1	48 60 748		BC 170, 40/400108635	X	Touch-up pen	Lackstift	
0060				(40/382551000)		Black	Svart	
0070	1	48 60 771		BC 198, 40/400108668	X	Touch-up pen	Lackstift	
0080				(40/382586002)		Embassy blue	Ambassadblå	
0090	1	48 60 888		BC 231, 40/400108775	X	Touch-up pen	Lackstift	
0100				(40/382934008)		Monte Carlo yellow	Monte Carlogul	
0110	1	48 60 920		BC 240, 40/400108403	X	Touch-up pen	Lackstift	
0120				(40/400100012)		Imola red	Imolaröd	
0130								
0140	2			BC 153, 40/383108008	X	Spray paint	Sprayfärg	
0145						Cirrus white	Cirrusvit	
0150	2			BC 170, 40/383100005	X	Spray paint	Sprayfärg	
0155						Black	Svart	
0160	2			BC 198, 40/382920007	X	Spray paint	Sprayfärg	
0165						Embassy blue	Ambassadblå	
0170	2	86 75 993		BC 240, 40/400100004	X	Spray paint	Sprayfärg	
0175						Imola red	Imolarod	
0180								
0190						Metalic	Metallic	
0200								
0202	1	48 60 870		BC 230, 40/400108767	X	Touch-up pen	Lackstift	
0204				(40/382931004)		Scarabé green	Scarabégrön	
0210	1	48 60 755		BC 247/268,	X	Touch-up pen	Lackstift	
0220				40/400108643(382567006)		Silver	Silver	
0230	1	48 61 001		BC 256, 40/400108486	X	Touch-up pen	Lackstift	
0240				(40/400107058)		Cayenne red	Kajennröd	
0250	1	48 61 019		BC 257, 40/400108460	X	Touch-up pen	Lackstift	
0260				(40/400107033)		Midnight blue	Midnattsblå	
0270	1	48 61 027		BC 258, 40/400108478	X	Touch-up pen	Lackstift	
0280				(40/400107041)		Amethyst violet	Ametistviolett	
0290	1	48 61 035		BC 261, 40/400108817	X	Touch-up pen	Lackstift	
0300						Green silver	Silvergrön	
0310	1	48 61 043		BC 262, 40/400108825	X	Touch-up pen	Lackstift	
0320						Golden sand	Guldsand	
0330	1	48 61 050		BC 263, 40/400108833	X	Touch-up pen	Lackstift	
0340						Copper bronze	Kopparbrons	
0350	1	48 61 068		BC 264, 40/400108874	X	Touch-up pen	Lackstift	
0360						Cosmic blue	Kosmosblå	
0370								
0380	2			BC 230, 40/382711000	X	Spray paint	Sprayfärg	
0390						Scarabé green	Scarabégrön	
0400	2			BC 247/268,	X	Spray paint	Sprayfärg	
0410				40/382494003		Silver	Silver	
0420	2	44 04 745		BC 256, 40/400107082	X	Spray paint	Sprayfärg	
0430						Cayenne red	Kajennröd	
0440	2	44 04 760		BC 257, 40/400107066	X	Spray paint	Sprayfärg	
0450						Midnight blue	Midnattsblå	
0460	2	44 04 802		BC 258, 40/400107074	X	Spray paint	Sprayfärg	
0470						Amethyst violet	Ametistviolett	
0480	2	48 61 159		BC 261, 40/400108932	X	Spray paint	Sprayfärg	
0490						Green silver	Silvergrön	
0500	2	48 61 142		BC 262, 40/400108924	X	Spray paint	Sprayfärg	
0510						Golden sand	Guldsand	
0520	2	48 61 134		BC 263, 40/400108916	X	Spray paint	Sprayfärg	
0530						Copper bronze	Kopparbrons	
0540	2	48 61 167		BC 264, 40/400108940	X	Spray paint	Sprayfärg	
0550						Cosmic blue	Kosmosblå	

MASTER INDEX

0	General	1-A02
2	Engine	1-C02
3A	Electrical systems, instruments	1-F02
4	Transmission	1-I02
5	Brakes	1-K02
6	Front assembly, Steering	1-L02
7	Suspension, Wheels	2-A02
8A	Body, external	2-B02
8B	Body, internal	2-F02
8C	Body, heating and ventilation	2-H02
8D	Tool, Labels	2-I02
9	Accessories	2-J02
10	Numerical register	3-A02

9 GROUP INDEX

Accessories engine	2-J06
Accessories electrical	2-J08
Accessories transmission	2-J20
Accessories steering	2-J22
Accessories chassis	2-J24
Accessories body	2-K04

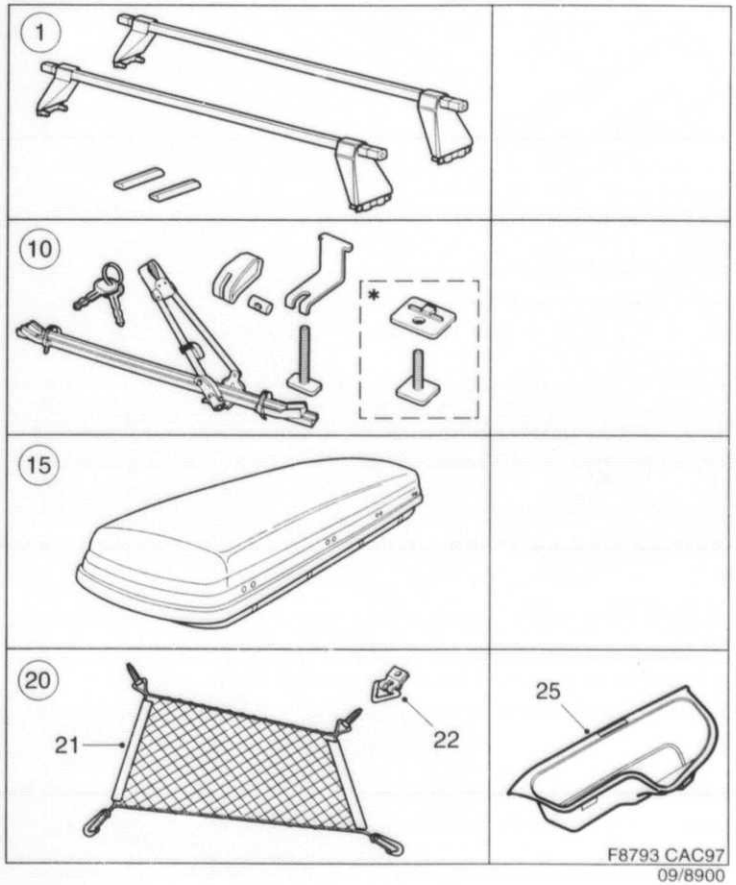

8900	Pos	Part No/Art nr	K S	Notes/Anmärkningar	Qty/ Antal	Description	Benämning	S L
0010	1	45 99 874		40/400105813	1	Load retainer	Lasthållare	
0020								
0030	10	86 88 251		40/400107793	1	Bicycle carrier	Cykelhållare	
0040						black	svart	
0050								
0060	10	47 23 771		40/400108068	1	Bicycle carrier	Cykelhållare	
0070								
0080	12	47 23 805		40/400108387	1	Lock kit	Lössats	
0090								
0100	15	86 88 244		40/400107785	1	Ski box	Skidbox	
0110								
0120	20	50 26 950		40/400108296	1	Luggage net	Bagagenät	
0130	21	46 06 992			1	.Luggage net	.Bagagenät	
0140	22	48 22 417			1	.Ring	.Ring	
0150								
0160	25	48 16 237		40/400109195	1	Cargo box	Bagagerumsbox	

MASTER INDEX

0	General	1-A02
2	Engine	1-C02
3A	Electrical systems, instruments	1-F02
4	Transmission	1-I02
5	Brakes	1-K02
6	Front assembly, Steering	1-L02
7	Suspension, Wheels	2-A02
8A	Body, external	2-B02
8B	Body, internal	2-F02
8C	Body, heating and ventilation	2-H02
8D	Tool, Labels	2-I02
9	Accessories	2-J02
10	Numerical register	3-A02

9 GROUP INDEX

Accessories engine	2-J06
Accessories electrical	2-J08
Accessories transmission	2-J20
Accessories steering	2-J22
Accessories chassis	2-J24
Accessories body	2-K04

10

Numerical register
Nummerregister
Indice numérico

3 -A02 *Numerical register* *Nummerregister*

Part No Art nr	Gr Gr	Page Sida	Grid Koord	Part No Art nr	Gr Gr	Page Sida	Grid Koord	Part No Art nr	Gr Gr	Page Sida	Grid Koord	Part No Art nr	Gr Gr	Page Sida	Grid Koord
40 13 454	09	027	2-K04	42 24 192	03A	065	1-H18	43 45 443	04	007	1-I08	43 88 757	08B	027	2-G04
40 15 707	02	031	1-D08	42 24 192	09	009	2-J10	43 45 450	06	005	1-L06	43 88 757	08B	043	2-G20
40 27 850	04	023	1-I24	42 26 023	02	029	1-D06	43 45 567	06	011	1-L12	43 91 157	02	055	1-E08
40 27 876	04	023	1-I24	42 29 738	02	031	1-D08	43 45 567	06	015	1-L16	43 93 195	02	033	1-D10
40 27 892	04	023	1-I24	42 29 746	02	031	1-D08	43 45 567	07	005	2-A06	43 95 513	02	051	1-E04
40 27 942	04	023	1-I24	42 29 985	02	031	1-D08	43 45 591	05	013	1-K14	43 95 612	09	043	2-K20
40 28 569	04	007	1-I08	42 33 342	03A	037	1-G14	43 45 609	05	013	1-K14	43 96 040	02	031	1-D08
40 28 569	06	013	1-L14	42 35 768	09	043	2-K20	43 45 724	05	015	1-K16	43 96 057	02	031	1-D08
40 30 359	08B	037	2-G14	42 38 242	04	033	1-J10	43 46 110	08A	041	2-C18	43 96 065	02	031	1-D08
40 34 369	08B	011	2-F12	42 38 424	04	033	1-J10	43 46 276	05	017	1-K18	43 96 099	02	039	1-D16
40 37 735	08A	037	2-C14	42 40 792	03A	031	1-G08	43 46 664	04	033	1-J10	43 96 149	02	039	1-D16
40 37 735	08A	039	2-C16	42 40 800	03A	031	1-G08	43 46 748	04	011	1-I12	43 97 311	02	011	1-C12
40 63 897	08A	027	2-C04	42 41 345	05	017	1-K18	43 47 217	05	017	1-K18	43 97 485	02	051	1-E04
40 69 704	08B	035	2-G12	42 41 394	08D	005	2-I06	43 47 407	08A	041	2-C18	43 97 501	02	051	1-E04
40 87 045	08A	025	2-C02	42 41 535	05	007	1-K08	43 47 456	02	005	1-C06	43 97 527	02	051	1-E04
40 87 128	03A	039	1-G16	42 42 897	06	013	1-L14	43 47 506	07	009	2-A10	43 97 535	02	051	1-E04
40 87 128	03A	045	1-G22	42 43 077	05	013	1-K14	43 47 514	07	009	2-A10	43 99 358	05	013	1-K14
40 87 128	03A	059	1-H12	42 44 307	05	011	1-K12	43 47 522	07	009	2-A10	43 99 804	08D	009	2-I10
40 87 128	08A	031	2-C08	42 44 422	05	005	1-K06	43 47 571	07	009	2-A10	44 00 198	05	017	1-K18
40 87 128	08A	049	2-D02	42 45 635	05	015	1-K16	43 47 589	08A	005	2-B06	44 00 206	05	017	1-K18
40 87 128	08C	013	2-H14	42 46 351	07	009	2-A10	43 47 589	08A	015	2-B16	44 00 214	05	017	1-K18
40 87 128	09	011	2-J12	42 46 377	07	005	2-A06	43 47 852	07	009	2-A10	44 00 248	05	017	1-K18
40 87 128	09	039	2-K16	42 47 698	05	017	1-K18	43 47 894	07	009	2-A10	44 00 255	05	019	1-K20
40 87 235	02	011	1-C12	42 49 751	05	005	1-K06	43 47 910	07	009	2-A10	44 00 263	05	017	1-K18
40 87 250	04	027	1-J04	42 59 248	03A	061	1-H14	43 47 928	08B	029	2-G06	44 00 271	05	019	1-K20
40 87 268	04	027	1-J04	42 66 003	09	035	2-K12	43 47 928	08B	033	2-G10	44 00 289	05	019	1-K20
40 87 367	04	027	1-J04	42 69 957	08B	019	2-F20	43 47 993	08A	033	2-C10	44 00 313	05	017	1-K18
40 87 441	03A	067	1-H20	42 69 957	08B	021	2-F22	43 47 993	08A	035	2-C12	44 02 798	06	013	1-L14
40 87 482	03A	067	1-H20	42 71 425	08B	013	2-F14	43 48 009	06	005	1-L06	44 04 745	09	049	2-L02
40 87 565	03A	067	1-H20	42 71 433	08B	013	2-F14	43 48 009	07	005	2-A06	44 04 760	09	049	2-L02
40 87 599	08A	011	2-B12	42 82 331	04	025	1-J02	43 48 009	07	009	2-A10	44 04 802	09	049	2-L02
40 87 664	08B	005	2-F06	42 82 372	04	025	1-J02	43 48 116	07	009	2-A10	44 08 423	03A	037	1-G14
40 87 664	08C	007	2-H08	42 83 594	02	051	1-E04	43 48 330	06	005	1-L06	44 09 223	03A	033	1-G10
40 87 698	03A	065	1-H18	42 83 594	02	055	1-E08	43 48 355	06	005	1-L06	44 09 223	09	009	2-J10
40 87 805	02	007	1-C08	43 04 234	08A	025	2-C02	43 56 127	02	015	1-C16	44 09 249	03A	033	1-G10
40 87 904	08A	033	2-C10	43 04 283	08A	011	2-B12	43 57 778	08D	007	2-I08	44 09 264	03A	033	1-G10
40 87 904	08A	035	2-C12	43 18 036	08C	017	2-H18	43 59 444	08D	007	2-I08	44 09 272	03A	033	1-G10
41 09 070	03A	065	1-H18	43 21 808	08A	025	2-C02	43 64 626	08C	009	2-H10	44 09 280	03A	033	1-G10
41 09 526	03A	033	1-G10	43 21 816	08A	025	2-C02	43 69 021	08B	041	2-G18	44 09 280	03A	035	1-G12
41 13 452	08C	009	2-H10	43 23 119	08A	039	2-C16	43 69 039	08B	041	2-G18	44 09 553	04	027	1-J04
41 13 650	08C	009	2-H10	43 23 259	03A	045	1-G22	43 69 047	08B	041	2-G18	44 09 553	04	041	1-J18
41 13 809	04	041	1-J18	43 23 259	09	011	2-J12	43 69 062	08B	041	2-G18	44 09 991	03A	007	1-F08
41 14 898	03A	033	1-G10	43 27 300	09	011	2-J12	43 74 203	02	031	1-D08	44 09 991	03A	009	1-F10
41 21 588	04	023	1-I24	43 33 480	08A	011	2-B12	43 74 211	02	031	1-D08	44 10 007	03A	007	1-F08
41 41 784	08B	041	2-G18	43 33 498	08A	023	2-B24	43 74 211	02	059	1-E12	44 10 007	03A	009	1-F10
41 56 550	02	033	1-D10	43 33 506	08A	023	2-B24	43 83 956	08C	017	2-H18	44 10 528	08B	039	2-G16
41 60 446	03A	061	1-H14	43 33 555	08A	023	2-B24	43 87 320	04	027	1-J04	44 10 528	08C	011	2-H12
41 60 511	02	033	1-D10	43 33 704	02	015	1-C16	43 87 338	04	027	1-J04	44 10 577	03A	063	1-H16
41 61 162	02	031	1-D08	43 33 704	08A	005	2-B06	43 87 346	04	027	1-J04	44 11 369	03A	005	1-F06
41 61 162	02	059	1-E12	43 33 704	08A	031	2-C08	43 87 353	04	027	1-J04	44 12 631	03A	035	1-G12
41 63 853	02	031	1-D08	43 41 095	03A	019	1-F20	43 87 452	04	027	1-J04	44 12 649	03A	035	1-G12
41 76 095	02	053	1-E06	43 41 095	09	009	2-J10	43 87 684	04	027	1-J04	44 20 600	08A	037	2-C14
41 76 095	05	013	1-K14	43 45 120	05	011	1-K12	43 87 692	04	027	1-J04	44 20 600	08A	039	2-C16
41 78 414	09	043	2-K20	43 45 138	02	027	1-D04	43 87 742	04	027	1-J04	44 22 192	08B	009	2-F10
41 90 831	08D	009	2-I10	43 45 138	08A	029	2-C06	43 87 759	04	027	1-J04	44 22 259	08B	007	2-F08
41 98 891	08D	005	2-I06	43 45 153	05	007	1-K08	43 87 767	04	027	1-J04	44 23 075	08B	005	2-F06
42 02 107	03A	023	1-F24	43 45 153	07	009	2-A10	43 87 775	04	027	1-J04	44 26 946	07	007	2-A08
42 18 277	08B	011	2-F12	43 45 419	04	007	1-I08	43 87 908	04	027	1-J04	44 33 322	03A	065	1-H18
42 22 493	03A	035	1-G12	43 45 419	05	015	1-K16	43 88 757	08B	023	2-F24	44 43 883	02	031	1-D08
42 23 426	03A	035	1-G12	43 45 435	04	007	1-I08	43 88 757	08B	025	2-G02	44 44 196	08D	007	2-I08

MASTER INDEX

0	General	1-A02
2	Engine	1-C02
3A	Electrical systems, instruments	1-F02
4	Transmission	1-I02
5	Brakes	1-K02
6	Front assembly, Steering	1-L02
7	Suspension, Wheels	2-A02
8A	Body, external	2-B02
8B	Body, internal	2-F02
8C	Body, heating and ventilation	2-H02
8D	Tool, Labels	2-I02
9	Accessories	2-J02
10	Numerical register	3-A02

3 -A03 *Numerical register* *Nummerregister*

Part No Art nr	Gr Gr	Page Sida	Grid Koord
44 60 945	08B	029	2-G06
44 66 405	03A	035	1-G12
44 66 413	03A	035	1-G12
44 66 421	09	009	2-J10
44 66 439	03A	033	1-G10
44 67 007	05	005	1-K06
44 67 015	05	005	1-K06
44 67 064	05	005	1-K06
44 67 064	05	019	1-K20
44 67 148	05	007	1-K08
44 68 153	03A	015	1-F16
44 68 179	03A	015	1-F16
44 68 930	03A	017	1-F18
44 68 930	03A	021	1-F22
44 69 854	08A	049	2-D02
44 70 639	08B	005	2-F06
44 71 082	03A	023	1-F24
44 73 484	08B	019	2-F20
44 73 484	08B	021	2-F22
44 77 824	04	023	1-I24
44 82 600	06	013	1-L14
44 84 259	03A	023	1-F24
44 86 684	03A	023	1-F24
44 89 308	03A	007	1-F08
44 89 308	03A	009	1-F10
44 89 316	03A	007	1-F08
44 89 316	03A	009	1-F10
44 90 314	04	023	1-I24
44 90 728	04	027	1-J04
44 90 736	04	027	1-J04
44 93 433	08A	033	2-C10
44 93 912	08A	025	2-C02
44 94 993	08A	049	2-D02
44 95 065	08A	007	2-B08
44 96 626	08B	029	2-G06
44 96 626	08B	033	2-G10
45 03 819	02	035	1-D12
45 05 269	08B	043	2-G20
45 06 143	06	007	1-L08
45 06 143	09	021	2-J22
45 06 150	06	007	1-L08
45 06 168	06	007	1-L08
45 06 200	06	007	1-L08
45 06 218	06	007	1-L08
45 06 226	06	007	1-L08
45 06 242	06	007	1-L08
45 08 081	08A	051	2-D04
45 10 731	08D	005	2-I06
45 12 620	08B	027	2-G04
45 12 646	08B	027	2-G04
45 12 653	08B	027	2-G04
45 12 745	08B	043	2-G20
45 12 760	08B	043	2-G20
45 12 810	08B	043	2-G20
45 12 828	08B	041	2-G18
45 12 836	08B	023	2-F24
45 12 844	08B	023	2-F24
45 12 851	08B	023	2-F24
45 12 869	08B	041	2-G18
[illegible] 885	08B	023	2-F24

Part No Art nr	Gr Gr	Page Sida	Grid Koord
45 18 668	08B	007	2-F08
45 19 641	09	009	2-J10
45 24 260	03A	027	1-G04
45 28 568	09	043	2-K20
45 31 877	08B	047	2-G24
45 31 885	08B	047	2-G24
45 32 248	06	007	1-L08
45 32 255	06	007	1-L08
45 32 412	08B	045	2-G22
45 34 244	06	007	1-L08
45 34 798	08B	029	2-G06
45 41 124	08C	005	2-H06
45 41 207	08C	015	2-H16
45 41 207	09	045	2-K22
45 41 215	08C	017	2-H18
45 41 215	09	045	2-K22
45 41 249	08C	017	2-H18
45 41 249	09	045	2-K22
45 41 256	08C	017	2-H18
45 41 256	09	045	2-K22
45 41 264	08C	017	2-H18
45 41 264	09	045	2-K22
45 41 306	08C	009	2-H10
45 41 306	09	045	2-K22
45 41 314	08C	013	2-H14
45 41 322	08C	013	2-H14
45 41 330	08C	013	2-H14
45 41 363	08C	013	2-H14
45 41 371	08C	013	2-H14
45 41 389	08C	013	2-H14
45 41 405	08C	013	2-H14
45 41 421	08C	013	2-H14
45 41 454	08C	013	2-H14
45 41 504	08C	013	2-H14
45 41 512	08C	013	2-H14
45 41 538	09	045	2-K22
45 41 546	08C	009	2-H10
45 41 579	08A	019	2-B20
45 41 587	08C	007	2-H08
45 41 611	08C	009	2-H10
45 41 629	08C	009	2-H10
45 41 645	08C	009	2-H10
45 41 686	08C	005	2-H06
45 41 694	08C	011	2-H12
45 41 702	08C	011	2-H12
45 41 744	08C	011	2-H12
45 42 130	08C	013	2-H14
45 42 148	08C	009	2-H10
45 42 148	09	045	2-K22
45 42 197	08C	017	2-H18
45 42 197	09	045	2-K22
45 42 346	08C	017	2-H18
45 42 353	08C	017	2-H18
45 42 361	08C	017	2-H18
45 42 429	08C	017	2-H18
45 42 429	09	045	2-K22
45 42 585	08C	013	2-H14
45 42 593	08C	013	2-H14
45 42 700	08C	013	2-H14
45 42 734	08C	013	2-H14

Part No Art nr	Gr Gr	Page Sida	Grid Koord
45 42 742	08C	013	2-H14
45 42 759	08C	013	2-H14
45 42 767	08C	013	2-H14
45 51 859	08A	059	2-D12
45 51 867	08A	059	2-D12
45 51 891	08A	057	2-D10
45 51 909	08A	057	2-D10
45 51 917	08A	057	2-D10
45 51 925	08A	057	2-D10
45 51 933	08A	057	2-D10
45 51 941	08A	057	2-D10
45 51 990	08A	057	2-D10
45 52 006	08A	057	2-D10
45 52 014	08A	057	2-D10
45 52 022	08A	057	2-D10
45 52 030	08A	057	2-D10
45 52 048	08A	057	2-D10
45 52 071	08A	059	2-D12
45 52 089	08A	059	2-D12
45 52 204	08A	025	2-C02
45 52 212	08A	025	2-C02
45 52 303	08A	045	2-C22
45 52 329	08A	041	2-C18
45 52 360	08A	053	2-D06
45 52 360	08A	073	2-E02
45 52 378	08A	053	2-D06
45 52 386	08A	053	2-D06
45 52 402	08A	055	2-D08
45 52 410	08A	057	2-D10
45 52 428	08A	057	2-D10
45 52 444	08A	011	2-B12
45 52 451	08A	011	2-B12
45 52 519	08A	037	2-C14
45 52 527	08A	037	2-C14
45 52 535	08A	037	2-C14
45 52 543	08A	037	2-C14
45 52 576	08A	037	2-C14
45 52 584	08A	037	2-C14
45 52 592	08A	033	2-C10
45 52 600	08A	033	2-C10
45 52 659	08A	057	2-D10
45 52 667	08A	057	2-D10
45 52 733	08A	039	2-C16
45 52 741	08A	039	2-C16
45 52 774	08A	039	2-C16
45 52 782	08A	039	2-C16
45 52 816	08A	057	2-D10
45 52 824	08A	057	2-D10
45 52 972	08A	057	2-D10
45 52 980	08A	057	2-D10
45 53 277	08A	043	2-C20
45 53 285	08A	043	2-C20
45 53 293	08A	045	2-C22
45 53 301	08A	045	2-C22
45 53 681	08A	059	2-D12
45 53 848	08A	073	2-E02
45 53 939	08A	043	2-C20
45 54 218	08A	019	2-B20
45 57 856	08A	033	2-C10
45 57 856	08A	035	2-C12

Part No Art nr	Gr Gr	Page Sida	Grid Koord
45 58 045	08A	041	2-C18
45 58 052	08A	041	2-C18
45 58 060	08A	041	2-C18
45 58 409	08D	011	2-I12
45 58 417	08D	011	2-I12
45 58 425	08D	011	2-I12
45 59 738	08A	037	2-C14
45 59 746	08A	039	2-C16
45 60 025	08A	061	2-D14
45 60 033	08A	061	2-D14
45 60 041	08A	061	2-D14
45 60 058	08A	061	2-D14
45 60 066	08A	061	2-D14
45 60 132	08A	063	2-D16
45 60 215	08A	049	2-D02
45 60 223	08A	049	2-D02
45 60 231	08A	049	2-D02
45 60 249	08A	049	2-D02
45 60 256	08A	049	2-D02
45 60 264	08A	049	2-D02
45 60 298	08A	049	2-D02
45 60 306	08A	049	2-D02
45 60 314	08C	007	2-H08
45 60 678	08A	041	2-C18
45 60 694	03A	029	1-G06
45 60 702	03A	029	1-G06
45 60 835	03A	019	1-F20
45 60 835	09	009	2-J10
45 60 843	03A	019	1-F20
45 60 876	08A	063	2-D16
45 60 991	08A	061	2-D14
45 61 007	08A	061	2-D14
45 61 056	08A	061	2-D14
45 61 064	08A	061	2-D14
45 61 148	08C	007	2-H08
45 61 288	08A	049	2-D02
45 61 411	08C	007	2-H08
45 61 536	03A	021	1-F22
45 61 544	03A	021	1-F22
45 61 551	03A	021	1-F22
45 61 569	03A	021	1-F22
45 61 577	03A	021	1-F22
45 62 161	08A	049	2-D02
45 62 252	08C	007	2-H08
45 62 898	08A	049	2-D02
45 62 906	08A	049	2-D02
45 62 914	08A	049	2-D02
45 62 922	08A	049	2-D02
45 62 948	08A	061	2-D14
45 62 963	08A	063	2-D16
45 63 011	09	009	2-J10
45 63 029	08A	049	2-D02
45 63 045	03A	031	1-G08
45 63 219	03A	025	1-G02
45 63 227	03A	025	1-G02
45 63 276	03A	029	1-G06
45 63 284	03A	029	1-G06
45 63 292	03A	031	1-G08
45 63 300	03A	031	1-G08

3 -A04 *Numerical register* *Nummerregister*

Part No Art nr	Gr Gr	Page Sida	Grid Koord
45 63 409	08C	007	2-H08
45 64 035	08A	049	2-D02
45 64 134	08A	061	2-D14
45 64 142	08A	061	2-D14
45 64 175	08A	031	2-C08
45 64 183	08A	031	2-C08
45 64 233	08A	061	2-D14
45 64 571	09	027	2-K04
45 64 589	09	027	2-K04
45 64 597	09	027	2-K04
45 64 605	09	027	2-K04
45 64 829	03A	031	1-G08
45 64 951	08A	063	2-D16
45 64 969	08A	063	2-D16
45 65 149	07	005	2-A06
45 65 172	07	005	2-A06
45 65 180	07	005	2-A06
45 65 21[illegible]	07	005	2-A06
45 65 230	07	005	2-A06
45 65 255	07	009	2-A10
45 65 263	07	009	2-A10
45 65 339	07	009	2-A10
45 65 354	07	009	2-A10
45 65 396	07	009	2-A10
45 65 404	07	009	2-A10
45 65 438	07	009	2-A10
45 65 446	07	009	2-A10
45 65 495	05	015	1-K16
45 65 503	05	015	1-K16
45 65 610	04	007	1-I08
45 65 628	04	007	1-I08
45 65 719	05	013	1-K14
45 65 743	05	013	1-K14
45 65 859	07	009	2-A10
45 65 875	05	009	1-K10
45 65 891	05	013	1-K14
45 65 909	05	013	1-K14
45 65 917	05	009	1-K10
45 66 030	07	007	2-A08
45 66 030	09	023	2-J24
45 66 055	07	007	2-A08
45 66 055	09	023	2-J24
45 66 139	05	009	1-K10
45 66 147	05	009	1-K10
45 66 311	07	007	2-A08
45 66 311	09	023	2-J24
45 66 378	07	009	2-A10
45 66 394	07	009	2-A10
45 66 600	07	009	2-A10
45 66 642	07	005	2-A06
45 66 659	07	005	2-A06
45 66 667	07	005	2-A06
45 66 675	07	005	2-A06
45 66 741	07	009	2-A10
45 66 741	09	025	2-K02
45 66 832	07	009	2-A10
45 66 873	05	007	1-K08
45 66 881	05	007	1-K08
45 66 899	06	005	1-L06
45 66 923	08A	005	2-B06

Part No Art nr	Gr Gr	Page Sida	Grid Koord
45 67 012	05	011	1-K12
45 67 020	05	011	1-K12
45 67 038	05	011	1-K12
45 67 046	05	011	1-K12
45 67 079	05	013	1-K14
45 67 087	05	013	1-K14
45 67 244	07	009	2-A10
45 67 343	05	017	1-K18
45 67 764	08D	011	2-I12
45 67 855	05	011	1-K12
45 67 863	05	011	1-K12
45 67 889	05	015	1-K16
45 68 119	05	013	1-K14
45 68 127	05	013	1-K14
45 68 192	05	005	1-K06
45 68 358	06	013	1-L14
45 68 390	06	011	1-L12
45 68 408	08D	007	2-I08
45 68 580	05	011	1-K12
45 69 570	07	009	2-A10
45 69 588	07	009	2-A10
45 69 596	07	009	2-A10
45 69 604	07	009	2-A10
45 69 638	06	005	1-L06
45 69 646	06	005	1-L06
45 72 038	02	029	1-D06
45 72 087	02	029	1-D06
45 72 129	02	039	1-D16
45 72 244	02	049	1-E02
45 72 491	02	027	1-D04
45 72 509	02	027	1-D04
45 72 517	02	027	1-D04
45 72 566	02	027	1-D04
45 72 590	02	055	1-E08
45 72 632	02	055	1-E08
45 72 731	08D	007	2-I08
45 73 028	02	065	1-E18
45 73 069	04	011	1-I12
45 73 069	04	033	1-J10
45 73 242	02	069	1-E22
45 73 309	04	033	1-J10
45 73 903	02	031	1-D08
45 74 026	02	029	1-D06
45 74 208	02	029	1-D06
45 74 216	02	029	1-D06
45 74 257	02	029	1-D06
45 74 349	02	029	1-D06
45 74 539	02	049	1-E02
45 75 395	09	045	2-K22
45 75 684	02	051	1-E04
45 75 700	02	051	1-E04
45 75 718	02	051	1-E04
45 76 039	02	055	1-E08
45 76 260	02	059	1-E12
45 76 278	02	059	1-E12
45 76 344	02	053	1-E06
45 76 351	02	053	1-E06
45 76 443	02	053	1-E06
45 76 443	09	045	2-K22
45 76 484	02	053	1-E06

Part No Art nr	Gr Gr	Page Sida	Grid Koord
45 76 492	02	051	1-E04
45 76 500	02	051	1-E04
45 76 575	02	051	1-E04
45 76 591	02	051	1-E04
45 76 591	02	067	1-E20
45 76 609	02	051	1-E04
45 76 617	02	051	1-E04
45 76 617	02	055	1-E08
45 76 757	02	029	1-D06
45 76 906	02	059	1-E12
45 76 914	02	059	1-E12
45 77 680	02	029	1-D06
45 77 755	09	019	2-J20
45 77 821	09	043	2-K20
45 77 839	09	043	2-K20
45 77 847	09	043	2-K20
45 77 946	09	043	2-K20
45 77 953	09	043	2-K20
45 77 961	09	043	2-K20
45 77 995	09	043	2-K20
45 78 241	04	029	1-J06
45 78 282	04	025	1-J02
45 78 357	04	03[illegible]	1-I24
45 78 [illegible]9	04	03[illegible]	1-I24
45 78 4[illegible]	04	023	1-I24
45 78 431	04	025	1-J02
45 78 563	04	031	1-J08
45 78 597	04	037	1-J14
45 78 605	08B	011	2-F12
45 78 928	04	023	1-I24
45 79 280	04	037	1-J14
45 79 363	04	007	1-I08
45 79 405	04	039	1-J16
45 79 421	04	041	1-J18
45 79 447	04	039	1-J16
45 79 454	04	039	1-J16
45 79 462	04	039	1-J16
45 79 470	04	039	1-J16
45 79 496	04	039	1-J16
45 79 504	04	039	1-J16
45 79 538	04	039	1-J16
45 79 546	04	039	1-J16
45 79 637	04	007	1-I08
45 79 785	04	023	1-I24
45 79 793	04	023	1-I24
45 79 801	04	023	1-I24
45 79 801	09	019	2-J20
45 80 031	04	027	1-J04
45 80 197	04	025	1-J02
45 80 247	04	035	1-J12
45 80 395	04	033	1-J10
45 80 445	09	019	2-J20
45 80 635	04	033	1-J10
45 80 684	04	039	1-J16
45 80 692	04	039	1-J16
45 80 759	04	039	1-J16
45 [illegible]7 903	08C	011	2-H12
45 88 232	03A	045	1-G22
45 88 232	09	011	2-J12
45 88 257	03A	045	1-G22

Part No Art nr	Gr Gr	Page Sida	Grid Koord
45 88 257	09	011	2-J12
45 89 040	03A	063	1-H16
45 92 937	08A	031	2-C08
45 92 945	08A	031	2-C08
45 92 952	08A	031	2-C08
45 92 960	08A	031	2-C08
45 93 281	08A	061	2-D14
45 93 836	08A	005	2-B06
45 96 110	08A	007	2-B08
45 96 979	03A	019	1-F20
45 96 979	08A	049	2-D02
45 96 979	09	009	2-J10
45 97 985	08A	005	2-B06
45 97 993	08A	005	2-B06
45 99 544	08A	023	2-B24
45 99 593	08A	005	2-B06
45 99 601	08A	005	2-B06
45 99 817	09	037	2-K14
45 99 841	09	037	2-K14
45 99 874	09	051	2-L04
45 99 916	03A	005	1-F06
46 00 094	08B	007	2-F08
46 00 193	08B	005	2-F06
46 00 201	08B	005	2-F06
46 00 250	08B	009	2-F10
46 00 292	08B	009	2-F10
46 00 342	08B	007	2-F08
46 00 805	08B	007	2-F08
46 02 207	08B	019	2-F20
46 02 215	08B	019	2-F20
46 02 223	08B	019	2-F20
46 02 231	08B	019	2-F20
46 02 322	08B	021	2-F22
46 02 330	08B	021	2-F22
46 02 348	08B	021	2-F22
46 02 355	08B	021	2-F22
46 02 447	08B	019	2-F20
46 02 454	08B	019	2-F20
46 02 462	08B	021	2-F22
46 02 470	08B	021	2-F22
46 02 488	08B	019	2-F20
46 02 546	08B	011	2-F12
46 02 553	08B	011	2-F12
46 02 561	08B	011	2-F12
46 02 579	08B	011	2-F12
46 02 629	08B	011	2-F12
46 02 777	08B	011	2-F12
46 02 785	08B	011	2-F12
46 02 801	08B	025	2-G02
46 02 819	08B	025	2-G02
46 02 835	08B	025	2-G02
46 02 843	08B	025	2-G02
46 02 868	08B	025	2-G02
46 02 876	08B	025	2-G02
46 03 395	08B	041	2-G18
46 03 403	03A	023	1-F24
46 03 411	08B	041	2-G18
46 03 429	08B	041	2-G18
46 03 437	08B	041	2-G18
46 03 486	03A	023	1-F24

MASTER INDEX

0	General	1-A02
2	Engine	1-C02
3A	Electrical systems, instruments	1-F02
4	Transmission	1-I02
5	Brakes	1-K02
6	Front assembly, Steering	1-L02
7	Suspension, Wheels	2-A02
8A	Body, external	2-B02
8B	Body, internal	2-F02
8C	Body, heating and ventilation	2-H02
8D	Tool, Labels	2-I02
9	Accessories	2-J02
10	Numerical register	3-A02

3 -A05 *Numerical register* *Nummerregister*

Part No Art nr	Gr Gr	Page Sida	Grid Koord
46 04 450	08B	025	2-G02
46 04 468	08B	025	2-G02
46 04 484	08B	025	2-G02
46 04 492	08B	025	2-G02
46 05 523	08B	013	2-F14
46 05 549	08B	013	2-F14
46 05 556	08B	013	2-F14
46 05 564	08B	013	2-F14
46 05 572	08B	013	2-F14
46 05 580	08B	013	2-F14
46 05 598	08B	013	2-F14
46 05 606	08B	013	2-F14
46 05 614	08B	013	2-F14
46 06 984	08B	041	2-G18
46 06 992	08B	041	2-G18
46 06 992	09	051	2-L04
46 07 347	08B	013	2-F14
46 07 628	08A	051	2-D04
46 08 360	08B	025	2-G02
46 08 378	08B	025	2-G02
46 09 012	08B	025	2-G02
46 09 020	08B	025	2-G02
46 09 954	08B	005	2-F06
46 15 100	08B	005	2-F06
46 15 118	08B	005	2-F06
46 15 266	08B	005	2-F06
46 15 548	08B	009	2-F10
46 15 555	08B	009	2-F10
46 15 589	08B	009	2-
46 15 597	08B	009	2-F10
46 15 613	08B	009	2-F10
46 15 621	08B	009	2-F10
46 15 670	08B	009	2-F10
46 15 696	08B	009	2-F10
46 15 696	09	035	2-K12
46 16 009	03A	039	1-G16
46 16 017	03A	041	1-G18
46 16 025	06	007	1-L08
46 16 058	03A	035	1-G12
46 16 082	03A	035	1-G12
46 16 090	03A	035	1-G12
46 16 108	03A	035	1-G12
46 16 124	03A	033	1-G10
46 16 132	03A	033	1-G10
46 16 173	03A	037	1-G14
46 16 504	03A	033	1-G10
46 16 520	03A	033	1-G10
46 16 850	03A	039	1-G16
46 16 850	09	013	2-J14
46 16 868	03A	039	1-G16
46 16 918	03A	039	1-G16
46 16 926	03A	039	1-G16
46 16 934	03A	039	1-G16
46 16 934	09	013	2-J14
46 16 942	03A	039	1-G16
46 16 967	03A	039	1-G16
46 16 983	03A	039	1-G16
46 17 007	03A	039	1-G16
46 17 023	03A	039	1-G16
46 17 049	03A	039	1-G16
46 17 064	09	013	2-J14
46 17 072	03A	039	1-G16
46 17 072	09	013	2-J14
46 17 148	03A	043	1-G20
46 17 163	03A	039	1-G16
46 17 171	03A	039	1-G16
46 17 536	03A	035	1-G12
46 17 544	03A	035	1-G12
46 17 551	03A	037	1-G14
46 17 551	09	011	2-J12
46 17 593	03A	035	1-G12
46 17 668	04	011	1-I12
46 18 369	08D	011	2-I12
46 18 369	09	011	2-J12
46 18 377	08D	011	2-I12
46 18 377	09	011	2-J12
46 19 086	03A	039	1-G16
46 20 365	02	025	1-D02
46 20 365	02	051	1-E04
46 23 351	09	043	2-K20
46 25 091	04	023	1-I24
46 28 319	08B	017	2-F18
46 28 343	08B	017	2-F18
46 28 376	08B	015	2-F16
46 28 400	08B	015	2-F16
46 30 752	08D	009	2-I10
46 32 766	08B	007	2-F08
46 32 931	08C	009	2-H10
46 33 202	08C	017	2-H18
46 33 202	09	045	2-K22
46 33 210	08C	017	2-H18
46 33 210	09	045	2-K22
46 33 368	08C	013	2-H14
46 33 376	08C	013	2-H14
46 33 418	08C	013	2-H14
46 33 426	08C	013	2-H14
46 33 483	08C	013	2-H14
46 33 491	08C	013	2-H14
46 33 509	08C	013	2-H14
46 33 517	08C	013	2-H14
46 33 657	08C	009	2-H10
46 33 665	08C	009	2-H10
46 33 681	08C	009	2-H10
46 33 681	09	045	2-K22
46 33 707	08C	009	2-H10
46 33 715	08C	017	2-H18
46 33 715	09	045	2-K22
46 33 798	08C	009	2-H10
46 33 806	08C	009	2-H10
46 33 814	08C	009	2-H10
46 33 822	08C	009	2-H10
46 33 848	08C	009	2-H10
46 33 848	08C	011	2-H12
46 33 905	08C	011	2-H12
46 33 939	08C	011	2-H12
46 33 947	08C	011	2-H12
46 33 954	08C	011	2-H12
46 33 962	08C	011	2-H12
46 34 705	08C	013	2-H14
46 34 713	08C	013	2-H14
46 34 721	08C	013	2-H14
46 34 739	08C	013	2-H14
46 34 747	08C	013	2-H14
46 34 754	08C	013	2-H14
46 34 762	08C	013	2-H14
46 34 770	08C	013	2-H14
46 34 788	08C	013	2-H14
46 34 796	08C	013	2-H14
46 34 804	08C	013	2-H14
46 34 812	08C	013	2-H14
46 34 820	08C	013	2-H14
46 34 838	08C	013	2-H14
46 34 846	08C	013	2-H14
46 34 853	08C	013	2-H14
46 35 462	08C	009	2-H10
46 35 470	08C	009	2-H10
46 36 742	08B	011	2-F12
46 36 759	08B	011	2-F12
46 38 953	08B	009	2-F10
46 38 961	08B	009	2-F10
46 39 043	08B	009	2-F10
46 39 043	09	029	2-K06
46 39 084	08B	005	2-F06
46 39 092	08B	005	2-F06
46 39 100	08B	005	2-F06
46 39 100	09	029	2-K06
46 39 316	03A	023	1-F24
46 40 389	08B	005	2-F06
46 40 389	09	029	2-K06
46 40 397	08B	005	2-F06
46 40 405	08B	005	2-F06
46 40 785	08B	007	2-F08
46 40 793	08B	007	2-F08
46 40 819	08B	007	2-F08
46 40 827	08B	007	2-F08
46 40 959	08B	007	2-F08
46 40 991	08B	005	2-F06
46 41 098	08B	005	2-F06
46 41 106	08B	005	2-F06
46 41 114	08B	005	2-F06
46 41 122	08B	005	2-F06
46 41 361	08B	013	2-F14
46 41 379	08B	013	2-F14
46 41 387	08B	013	2-F14
46 41 395	08B	013	2-F14
46 42 187	08B	013	2-F14
46 42 195	08B	013	2-F14
46 42 203	08B	005	2-F06
46 42 401	08B	005	2-F06
46 42 542	03A	023	1-F24
46 42 559	03A	023	1-F24
46 42 633	08B	005	2-F06
46 42 708	03A	023	1-F24
46 42 716	08B	027	2-G04
46 43 086	08B	011	2-F12
46 43 094	08B	011	2-F12
46 43 383	08B	007	2-F08
46 43 615	08B	007	2-F08
46 43 706	08A	051	2-D04
46 43 714	08A	051	2-D04
46 43 748	08A	051	2-D04
46 43 755	08A	051	2-D04
46 44 100	08A	051	2-D04
46 44 134	08B	041	2-G18
46 44 142	08B	041	2-G18
46 44 167	08B	019	2-F20
46 44 175	08B	019	2-F20
46 44 183	08B	019	2-F20
46 44 191	08B	019	2-F20
46 44 365	08B	019	2-F20
46 44 365	08B	021	2-F22
46 44 373	08B	019	2-F20
46 44 373	08B	021	2-F22
46 44 381	08B	019	2-F20
46 44 381	08B	021	2-F22
46 44 399	08B	019	2-F20
46 44 399	08B	021	2-F22
46 44 670	08B	027	2-G04
46 45 578	05	013	1-K14
46 46 220	05	011	1-K12
46 46 675	05	009	1-K10
46 46 683	05	009	1-K10
46 46 691	05	009	1-K10
46 46 832	05	017	1-K18
46 47 194	05	005	1-K06
46 49 844	05	013	1-K14
46 53 374	06	007	1-L08
46 53 382	06	007	1-L08
46 53 390	06	007	1-L08
46 53 523	08B	045	2-G22
46 53 531	08B	045	2-G22
46 53 556	08B	045	2-G22
46 53 564	08B	045	2-G22
46 53 721	08B	035	2-G12
46 53 796	08B	035	2-G12
46 53 804	08B	035	2-G12
46 53 853	06	007	1-L08
46 54 406	08B	029	2-G06
46 54 406	08B	033	2-G10
46 54 414	08B	029	2-G06
46 54 414	08B	033	2-G10
46 54 448	08B	029	2-G06
46 54 448	08B	033	2-G10
46 54 455	08B	029	2-G06
46 54 455	08B	033	2-G10
46 54 463	08B	029	2-G06
46 54 463	08B	033	2-G10
46 54 471	08B	029	2-G06
46 54 471	08B	033	2-G10
46 54 570	08B	029	2-G06
46 54 570	08B	033	2-G10
46 54 588	08B	029	2-G06
46 54 588	08B	033	2-G10
46 54 596	08B	029	2-G06
46 54 620	08B	029	2-G06
46 54 646	08B	029	2-G06
46 54 729	08B	029	2-G06
46 54 737	08B	031	2-G08
46 54 984	08B	029	2-G06
46 54 984	08B	033	2-G10

3 -A06 *Numerical register* *Nummerregister*

Part No Art nr	Gr Gr	Page Sida	Grid Koord
46 55 601	08B	039	2-G16
46 55 619	08B	039	2-G16
46 55 627	08B	039	2-G16
46 55 635	08B	039	2-G16
46 55 676	08B	039	2-G16
46 55 684	08B	039	2-G16
46 56 070	08B	039	2-G16
46 56 104	08B	039	2-G16
46 56 112	08B	039	2-G16
46 56 484	08B	039	2-G16
46 56 625	08B	039	2-G16
46 56 641	08B	039	2-G16
46 56 658	08B	039	2-G16
46 57 185	08B	033	2-G10
46 57 193	08B	033	2-G10
46 57 201	08B	033	2-G10
46 57 235	08B	033	2-G10
46 57 243	08B	033	2-G10
46 58 241	08B	033	2-G10
46 58 316	08B	029	2-G06
46 58 316	08B	033	2-G10
46 58 324	08B	033	2-G10
46 58 365	08B	029	2-G06
46 58 373	08B	029	2-G06
46 58 381	08B	029	2-G06
46 58 399	08B	035	2-G12
46 58 407	08B	035	2-G12
46 58 415	08B	033	2-G10
46 58 423	08B	033	2-G10
46 58 449	08B	029	2-G06
46 58 456	08B	029	2-G06
46 58 464	08B	035	2-G12
46 58 472	08B	035	2-G12
46 58 480	08B	035	2-G12
46 58 498	08B	035	2-G12
46 58 506	08B	035	2-G12
46 58 514	08B	035	2-G12
46 58 548	08B	035	2-G12
46 58 589	08B	029	2-G06
46 58 589	08B	033	2-G10
46 60 445	02	047	1-D24
46 62 359	02	047	1-D24
46 63 597	03A	045	1-G22
46 63 597	03A	069	1-H22
46 63 613	03A	045	1-G22
46 63 613	03A	069	1-H22
46 65 840	03A	059	1-H12
46 69 081	09	011	2-J12
46 70 097	02	055	1-E08
46 70 105	02	055	1-E08
46 70 352	02	055	1-E08
46 70 428	03A	011	1-F12
46 70 444	02	027	1-D04
46 70 469	02	027	1-D04
46 70 493	03A	007	1-F08
46 70 493	03A	009	1-F10
46 70 717	02	015	1-C16
46 70 717	09	045	2-K22
46 70 741	02	049	1-E02
46 71 434	02	005	1-C06
46 71 541	02	039	1-D16
46 71 558	02	031	1-D08
46 71 699	02	031	1-D08
46 71 756	02	039	1-D16
46 71 863	02	027	1-D04
46 71 871	02	027	1-D04
46 72 135	02	055	1-E08
46 72 143	02	055	1-E08
46 72 150	02	055	1-E08
46 72 317	09	043	2-K20
46 72 333	09	043	2-K20
46 72 358	09	043	2-K20
46 72 382	09	043	2-K20
46 72 408	09	043	2-K20
46 72 424	09	043	2-K20
46 72 432	09	043	2-K20
46 72 556	02	039	1-D16
46 72 861	02	049	1-E02
46 77 001	03A	021	1-F22
46 77 019	03A	021	1-F22
46 77 027	03A	021	1-F22
46 77 050	03A	021	1-F22
46 77 068	03A	021	1-F22
46 77 092	03A	021	1-F22
46 77 100	03A	021	1-F22
46 77 159	03A	021	1-F22
46 77 167	03A	021	1-F22
46 77 191	08A	027	2-C04
46 77 241	09	027	2-K04
46 80 187	08B	025	2-G02
46 80 187	09	031	2-K08
46 80 195	09	031	2-K08
46 80 203	09	031	2-K08
46 80 211	08B	025	2-G02
46 80 211	09	031	2-K08
46 80 229	09	031	2-K08
46 80 237	09	031	2-K08
46 80 245	08B	025	2-G02
46 80 245	09	031	2-K08
46 80 252	09	031	2-K08
46 80 260	09	031	2-K08
46 80 278	08B	025	2-G02
46 80 278	09	031	2-K08
46 80 286	09	031	2-K08
46 80 294	09	031	2-K08
46 81 078	09	031	2-K08
46 81 565	08B	019	2-F20
46 81 565	08B	043	2-G20
46 81 565	08C	007	2-H08
46 82 571	08B	013	2-F14
46 82 639	08B	019	2-F20
46 82 639	08B	021	2-F22
46 82 985	08B	021	2-F22
46 83 165	08B	041	2-G18
46 83 827	08B	027	2-G04
46 83 850	08B	041	2-G18
46 83 876	08A	051	2-D04
46 83 884	08A	051	2-D04
46 84 155	06	009	1-L10
46 84 197	06	009	1-L10
46 85 053	02	065	1-E18
46 85 129	02	005	1-C06
46 85 137	08B	005	2-F06
46 85 145	08B	007	2-F08
46 85 152	08B	009	2-F10
46 85 186	04	019	1-I20
46 85 202	03A	015	1-F16
46 85 244	02	057	1-E10
46 85 293	08A	023	2-B24
46 85 301	03A	019	1-F20
46 85 301	09	003	2-J10
46 85 350	04	021	1-I22
46 85 368	02	023	1-C24
46 85 376	08B	005	2-F06
46 85 392	09	043	2-K20
46 85 400	09	043	2-K20
46 85 475	04	011	1-I12
46 85 475	04	033	1-J10
46 85 491	08B	039	2-G16
46 85 525	02	015	1-C16
46 85 582	02	049	1-E02
46 85 590	02	049	1-E02
46 85 608	02	049	1-E02
46 85 624	08A	037	2-C14
46 85 624	08A	039	2-C16
46 85 632	08A	057	2-D10
46 85 640	08B	007	2-F08
46 85 657	04	023	1-I24
46 85 665	08B	045	2-G22
46 85 665	08B	047	2-G24
46 85 707	08C	013	2-H14
46 85 723	08A	025	2-C02
46 85 723	08B	039	2-G16
46 85 749	02	025	1-D02
46 85 756	02	005	1-C06
46 85 764	04	005	1-I06
46 85 822	08B	039	2-G16
46 85 897	08A	009	2-B10
46 85 905	02	025	1-D02
46 85 905	04	033	1-J10
46 85 913	02	005	1-C06
46 85 988	08B	031	2-G08
46 85 988	08B	037	2-G14
46 86 101	07	009	2-A10
46 86 101	09	025	2-K02
46 86 606	07	005	2-A06
46 86 820	07	005	2-A06
46 86 846	04	043	1-J20
46 86 879	04	043	1-J20
46 86 887	04	029	1-J06
46 86 895	04	029	1-J06
46 86 903	04	029	1-J06
46 86 911	04	029	1-J06
46 86 929	04	029	1-J06
46 86 937	04	029	1-J06
46 86 945	04	029	1-J06
46 86 952	04	029	1-J06
46 86 960	04	029	1-J06
46 86 978	04	029	1-J06
46 86 986	04	029	1-J06
46 86 986	04	043	1-J20
46 86 994	04	029	1-J06
46 87 000	04	029	1-J06
46 87 000	04	043	1-J20
46 87 018	04	029	1-J06
46 87 018	04	043	1-J20
46 87 042	04	043	1-J20
46 87 075	05	009	1-K10
46 87 091	04	029	1-J06
46 87 109	07	005	2-A06
46 87 125	07	009	2-A10
46 87 257	07	007	2-A08
46 87 257	09	023	2-J24
46 87 596	04	007	1-I08
46 87 612	05	015	1-K16
46 87 620	05	015	1-K16
46 87 638	04	007	1-I08
46 87 679	07	009	2-A10
46 87 679	09	025	2-K02
46 87 687	07	009	2-A10
46 87 687	09	025	2-K02
46 88 156	07	007	2-A08
46 88 180	05	011	1-K12
46 88 198	05	011	1-K12
46 88 586	04	007	1-I08
46 88 586	05	015	1-K16
46 88 594	05	015	1-K16
46 88 842	05	015	1-K16
46 89 089	05	013	1-K14
46 89 097	05	013	1-K14
46 89 105	05	013	1-K14
46 89 352	05	015	1-K16
46 89 360	05	015	1-K16
46 89 378	07	005	2-A06
46 89 519	07	005	2-A06
46 89 543	06	011	1-L12
46 89 626	05	011	1-K12
46 89 634	09	023	2-J24
46 89 923	06	005	1-L06
46 89 949	08D	011	2-I12
46 92 802	03A	037	1-G14
46 93 362	03A	063	1-H16
46 94 363	03A	033	1-G10
46 95 243	08A	041	2-C18
46 95 292	08A	037	2-C14
46 95 300	08A	037	2-C14
46 95 672	08A	035	2-C12
46 95 680	08A	035	2-C12
46 95 730	08A	035	2-C12
46 95 748	08A	035	2-C12
46 95 813	08A	037	2-C14
46 95 813	08A	039	2-C16
46 95 821	08A	037	2-C14
46 95 821	08A	039	2-C16
46 97 314	08A	059	2-D12
46 97 322	08A	059	2-D12
46 98 098	08A	053	2-D06
46 98 106	08A	053	2-D06
46 98 205	08A	025	2-C02
46 98 379	08A	033	2-C10

MASTER INDEX

0	General	1-A02
2	Engine	1-C02
3A	Electrical systems, instruments	1-F02
4	Transmission	1-I02
5	Brakes	1-K02
6	Front assembly, Steering	1-L02
7	Suspension, Wheels	2-A02
8A	Body, external	2-B02
8B	Body, internal	2-F02
8C	Body, heating and ventilation	2-H02
8D	Tool, Labels	2-I02
9	Accessories	2-J02
10	Numerical register	3-A02

3 -A07 Numerical register Nummerregister

Part No Art nr	Gr Gr	Page Sida	Grid Koord
46 98 387	08A	033	2-C10
46 98 411	08A	059	2-D12
46 98 429	08A	059	2-D12
46 98 874	08A	025	2-C02
46 99 906	08A	011	2-B12
46 99 914	08A	011	2-B12
46 99 922	08A	011	2-B12
46 99 930	08A	011	2-B12
46 99 948	08A	011	2-B12
46 99 955	08A	011	2-B12
46 99 963	08A	011	2-B12
46 99 971	08A	011	2-B12
46 99 997	08A	011	2-B12
47 00 340	08B	011	2-F12
47 00 852	08B	007	2-F08
47 00 860	08B	007	2-F08
47 00 878	08B	007	2-F08
47 00 886	08B	007	2-F08
47 00 894	08B	007	2-F08
47 00 902	08B	007	2-F08
47 00 910	08B	007	2-F08
47 00 928	08B	007	2-F08
47 02 742	08A	051	2-D04
47 02 759	08A	051	2-D04
47 02 767	08A	051	2-D04
47 02 775	08A	051	2-D04
47 02 783	08A	051	2-D04
47 02 791	08A	051	2-D04
47 02 809	08A	051	2-D04
47 02 817	08A	051	2-D04
47 04 474	08B	007	2-F08
47 04 482	08B	007	2-F08
47 04 748	08B	019	2-F20
47 04 755	08B	019	2-F20
47 04 763	08B	019	2-F20
47 04 771	08B	019	2-F20
47 04 821	08B	019	2-F20
47 04 821	09	029	2-K06
47 04 839	08B	019	2-F20
47 04 839	09	029	2-K06
47 05 026	08B	021	2-F22
47 05 034	08B	021	2-F22
47 05 042	08B	021	2-F22
47 05 059	08B	021	2-F22
47 05 109	08B	021	2-F22
47 05 109	09	029	2-K06
47 05 117	08B	021	2-F22
47 05 117	09	029	2-K06
47 05 141	08B	021	2-F22
47 05 158	08B	021	2-F22
47 05 273	08B	019	2-F20
47 05 281	08B	019	2-F20
47 05 588	08B	005	2-F06
47 05 604	08B	005	2-F06
47 05 646	08B	005	2-F06
47 05 802	03A	023	1-F24
47 05 885	03A	023	1-F24
47 05 919	08B	005	2-F06
47 05 927	08B	005	2-F06
47 05 935	08B	005	2-F06

Part No Art nr	Gr Gr	Page Sida	Grid Koord
47 05 968	08B	009	2-F10
47 05 968	09	029	2-K06
47 05 992	08B	009	2-F10
47 05 992	09	029	2-K06
47 06 099	08B	027	2-G04
47 06 115	08B	027	2-G04
47 06 198	08B	027	2-G04
47 06 222	08B	027	2-G04
47 06 255	08B	027	2-G04
47 06 289	08B	027	2-G04
47 06 495	08B	011	2-F12
47 06 503	08B	011	2-F12
47 06 511	08B	011	2-F12
47 06 529	08B	011	2-F12
47 06 537	08B	011	2-F12
47 06 636	09	029	2-K06
47 06 651	09	029	2-K06
47 08 368	08B	007	2-F08
47 09 515	08B	009	2-F10
47 11 255	03A	039	1-G16
47 11 255	09	013	2-J14
47 11 289	03A	039	1-G16
47 11 289	09	013	2-J14
47 11 297	03A	039	1-G16
47 11 297	09	013	2-J14
47 11 545	03A	045	1-G22
47 11 552	03A	045	1-G22
47 11 578	09	013	2-J14
47 11 586	09	013	2-J14
47 11 602	03A	043	1-G20
47 11 768	09	011	2-J12
47 12 188	09	015	2-J16
47 12 196	09	013	2-J14
47 12 204	09	013	2-J14
47 12 212	09	015	2-J16
47 12 220	09	013	2-J14
47 12 238	09	013	2-J14
47 12 246	09	013	2-J14
47 12 253	09	015	2-J16
47 12 279	09	013	2-J14
47 12 287	09	013	2-J14
47 12 295	09	013	2-J14
47 12 303	09	015	2-J16
47 12 311	09	013	2-J14
47 12 329	09	013	2-J14
47 12 345	03A	065	1-H18
47 12 428	09	013	2-J14
47 12 451	08D	011	2-I12
47 12 451	09	011	2-J12
47 12 717	03A	067	1-H20
47 12 741	03A	067	1-H20
47 12 758	03A	067	1-H20
47 12 766	03A	067	1-H20
47 12 774	03A	067	1-H20
47 12 782	03A	067	1-H20
47 12 790	03A	067	1-H20
47 13 350	03A	067	1-H20
47 13 368	03A	067	1-H20
47 13 392	03A	041	1-G18
47 13 608	03A	041	1-G18

Part No Art nr	Gr Gr	Page Sida	Grid Koord
47 13 707	03A	045	1-G22
47 13 707	03A	069	1-H22
47 13 723	08D	011	2-I12
47 13 731	08D	011	2-I12
47 13 731	09	011	2-J12
47 14 234	09	013	2-J14
47 14 739	03A	039	1-G16
47 14 754	03A	039	1-G16
47 14 762	03A	039	1-G16
47 14 770	03A	045	1-G22
47 14 846	03A	039	1-G16
47 14 853	03A	039	1-G16
47 14 861	03A	039	1-G16
47 14 879	03A	039	1-G16
47 14 903	03A	039	1-G16
47 14 903	09	013	2-J14
47 14 911	03A	039	1-G16
47 16 346	08B	039	2-G16
47 16 577	08B	031	2-G08
47 16 593	08B	031	2-G08
47 16 601	08B	031	2-G08
47 16 635	08B	037	2-G14
47 16 643	08B	037	2-G14
47 16 676	08B	037	2-G14
47 16 684	08B	037	2-G14
47 16 841	08B	045	2-G22
47 17 070	08B	039	2-G16
47 17 088	08B	039	2-G16
47 17 161	09	021	2-J22
47 17 179	09	021	2-J22
47 17 567	06	009	1-L10
47 17 575	06	009	1-L10
47 18 524	08B	031	2-G08
47 18 524	08B	035	2-G12
47 18 854	06	009	1-L10
47 20 009	08A	007	2-B08
47 20 033	08A	019	2-B20
47 20 041	08A	019	2-B20
47 20 058	08A	019	2-B20
47 20 066	08A	019	2-B20
47 20 074	08A	019	2-B20
47 20 082	08A	019	2-B20
47 20 090	08A	019	2-B20
47 20 108	08A	019	2-B20
47 20 116	08A	021	2-B22
47 20 124	08A	021	2-B22
47 20 132	08A	007	2-B08
47 20 157	08A	019	2-B20
47 20 165	08A	019	2-B20
47 20 173	08A	021	2-B22
47 20 181	08A	021	2-B22
47 20 199	08A	021	2-B22
47 20 207	08A	021	2-B22
47 20 215	08A	021	2-B22
47 20 223	08A	021	2-B22
47 20 231	08A	019	2-B20
47 20 249	08A	019	2-B20
47 20 256	08A	017	2-B18
47 20 264	08A	017	2-B18
47 20 272	08A	019	2-B20

Part No Art nr	Gr Gr	Page Sida	Grid Koord
47 20 280	08A	019	2-B20
47 20 298	08A	021	2-B22
47 20 306	08A	021	2-B22
47 20 314	08A	021	2-B22
47 20 322	08A	021	2-B22
47 20 330	08A	019	2-B20
47 20 348	08A	019	2-B20
47 20 355	08A	019	2-B20
47 20 363	08A	019	2-B20
47 20 371	08A	019	2-B20
47 20 389	08A	019	2-B20
47 20 397	08A	015	2-B16
47 22 948	08D	005	2-I06
47 23 755	09	039	2-K16
47 23 771	09	051	2-L04
47 23 805	09	051	2-L04
47 24 688	09	037	2-K14
47 24 803	08A	015	2-B16
47 24 811	08A	021	2-B22
47 24 829	08A	021	2-B22
47 24 837	08A	021	2-B22
47 24 845	08A	021	2-B22
47 24 852	08A	021	2-B22
47 24 860	08A	021	2-B22
47 24 878	08A	021	2-B22
47 24 886	08A	021	2-B22
47 24 894	08A	015	2-B16
47 24 902	08A	015	2-B16
47 24 910	08A	015	2-B16
47 24 928	08A	015	2-B16
47 24 936	08A	005	2-B06
47 24 944	08A	005	2-B06
47 24 951	08A	015	2-B16
47 24 969	08A	015	2-B16
47 24 977	08A	015	2-B16
47 24 985	08A	015	2-B16
47 24 993	08A	015	2-B16
47 25 875	09	043	2-K20
47 25 883	02	011	1-C12
47 26 220	02	051	1-E04
47 26 238	02	051	1-E04
47 26 261	02	069	1-E22
47 26 329	02	029	1-D06
47 26 337	09	043	2-K20
47 26 345	02	057	1-E10
47 26 428	02	057	1-E10
47 26 436	02	057	1-E10
47 26 493	09	043	2-K20
47 26 519	09	043	2-K20
47 26 717	08D	011	2-I12
47 26 725	08D	011	2-I12
47 27 038	02	029	1-D06
47 29 448	09	043	2-K20
47 29 547	09	043	2-K20
47 29 620	02	057	1-E10
47 29 844	09	043	2-K20
47 29 943	02	051	1-E04
47 33 176	03A	063	1-H16
47 33 184	09	009	2-J10
47 33 440	03A	035	1-G12

3 -A08 Numerical register Nummerregister

Part No Art nr	Gr Gr	Page Sida	Grid Koord
47 33 457	03A	035	1-G12
47 34 018	03A	007	1-F08
47 36 914	03A	039	1-G16
47 37 151	03A	007	1-F08
47 37 151	03A	009	1-F10
47 39 447	09	043	2-K20
47 39 488	03A	033	1-G10
47 39 918	09	043	2-K20
47 40 437	03A	023	1-F24
47 40 445	03A	023	1-F24
47 40 494	03A	023	1-F24
47 41 013	08B	005	2-F06
47 41 021	08B	005	2-F06
47 41 724	08B	025	2-G02
47 41 732	08B	025	2-G02
47 41 815	08B	009	2-F10
47 41 963	08B	005	2-F06
47 43 399	08B	023	2-F24
47 44 090	08B	043	2-G20
47 44 108	08B	043	2-G20
47 44 116	08B	043	2-G20
47 44 124	08B	043	2-G20
47 44 447	08B	005	2-F06
47 44 454	08B	005	2-F06
47 44 462	08B	005	2-F06
47 44 470	08B	005	2-F06
47 47 077	08B	007	2-F08
47 47 648	08B	025	2-G02
47 47 671	08B	025	2-G02
47 47 705	08B	025	2-G02
47 47 721	08B	025	2-G02
47 47 747	08B	025	2-G02
47 47 770	08B	025	2-G02
47 47 796	08B	025	2-G02
47 47 820	08B	025	2-G02
47 48 240	08B	007	2-F08
47 48 257	08B	007	2-F08
47 48 265	08B	007	2-F08
47 48 273	08B	007	2-F08
47 49 891	08B	009	2-F10
47 51 657	02	005	1-C06
47 51 715	09	005	2-J06
47 51 756	02	049	1-E02
47 51 756	09	005	2-J06
47 52 085	02	027	1-D04
47 52 168	02	029	1-D06
47 52 382	02	039	1-D16
47 52 440	08D	007	2-I08
47 52 606	09	043	2-K20
47 52 960	02	015	1-C16
47 53 745	02	049	1-E02
47 53 752	02	049	1-E02
47 53 901	09	041	2-K18
47 53 935	09	041	2-K18
47 53 976	02	051	1-E04
47 54 263	02	007	1-C08
47 54 719	02	015	1-C16
47 54 883	09	043	2-K20
47 56 045	08C	009	2-H10
47 56 060	08C	009	2-H10

Part No Art nr	Gr Gr	Page Sida	Grid Koord
47 56 078	08C	009	2-H10
47 56 110	08C	017	2-H18
47 56 128	08C	017	2-H18
47 56 136	08C	009	2-H10
47 56 250	08C	011	2-H12
47 56 268	08C	011	2-H12
47 56 276	08C	011	2-H12
47 56 581	08C	011	2-H12
47 56 714	02	051	1-E04
47 56 813	08C	011	2-H12
47 56 821	08C	009	2-H10
47 56 888	08C	015	2-H16
47 56 896	08C	015	2-H16
47 56 946	08C	009	2-H10
47 56 946	09	045	2-K22
47 56 953	09	045	2-K22
47 56 961	08D	009	2-I10
47 56 961	09	045	2-K22
47 57 027	08C	009	2-H10
47 57 076	08C	017	2-H18
47 57 084	08C	017	2-H18
47 57 092	08C	017	2-H18
47 57 159	08C	009	2-H10
47 57 167	08C	009	2-H10
47 57 183	08C	011	2-H12
47 57 191	08C	011	2-H12
47 57 209	08C	011	2-H12
47 57 217	08C	009	2-H10
47 57 217	08C	011	2-H12
47 57 258	08C	011	2-H12
47 57 316	08C	009	2-H10
47 57 324	08C	009	2-H10
47 57 340	08C	009	2-H10
47 57 357	08C	009	2-H10
47 57 373	08C	009	2-H10
47 57 456	08C	011	2-H12
47 57 464	08C	011	2-H12
47 57 472	08C	011	2-H12
47 57 480	08C	011	2-H12
47 57 498	08C	009	2-H10
47 57 506	08C	009	2-H10
47 57 514	08C	009	2-H10
47 57 522	08C	011	2-H12
47 57 555	08C	009	2-H10
47 57 555	09	045	2-K22
47 57 563	08C	009	2-H10
47 57 563	09	045	2-K22
47 57 753	08C	009	2-H10
47 57 761	08C	011	2-H12
47 57 779	08C	011	2-H12
47 57 860	08C	011	2-H12
47 57 878	08C	011	2-H12
47 57 886	08C	009	2-H10
47 58 132	08C	017	2-H18
47 58 140	08C	017	2-H18
47 58 785	08C	011	2-H12
47 58 884	09	041	2-K18
47 58 892	09	041	2-K18
47 58 918	09	041	2-K18
47 58 959	09	041	2-K18

Part No Art nr	Gr Gr	Page Sida	Grid Koord
47 58 967	09	041	2-K18
47 59 015	09	041	2-K18
47 59 023	09	041	2-K18
47 59 049	08C	017	2-H18
47 59 056	08C	017	2-H18
47 59 064	08C	017	2-H18
47 59 072	08C	017	2-H18
47 59 874	09	041	2-K18
47 61 284	09	047	2-K24
47 61 292	09	047	2-K24
47 62 217	09	047	2-K24
47 62 225	09	047	2-K24
47 62 233	09	047	2-K24
47 65 004	08A	011	2-B12
47 65 012	08A	011	2-B12
47 65 020	08A	011	2-B12
47 65 038	08A	011	2-B12
47 65 053	08A	011	2-B12
47 65 061	08A	011	2-B12
47 65 079	08A	011	2-B12
47 65 087	08A	011	2-B12
47 65 095	08A	011	2-B12
47 65 103	08A	011	2-B12
47 65 111	08A	011	2-B12
47 65 129	08A	011	2-B12
47 65 137	08A	011	2-B12
47 66 739	08A	045	2-C22
47 66 879	08A	041	2-C18
47 67 059	08A	035	2-C12
47 67 067	08A	035	2-C12
47 67 117	08A	055	2-D08
47 67 331	08A	025	2-C02
47 67 356	08A	035	2-C12
47 67 364	08A	035	2-C12
47 67 570	08A	057	2-D10
47 67 588	08A	057	2-D10
47 67 653	08A	033	2-C10
47 67 653	08A	035	2-C12
47 67 802	08A	045	2-C22
47 68 552	08A	055	2-D08
47 68 636	08A	025	2-C02
47 68 776	08A	033	2-C10
47 68 784	08A	033	2-C10
47 68 792	08A	035	2-C12
47 68 800	08A	035	2-C12
47 68 842	08A	033	2-C10
47 69 626	08A	019	2-B20
47 70 400	02	035	1-D12
47 76 266	04	011	1-I12
47 77 009	09	019	2-J20
47 77 017	09	019	2-J20
47 77 025	09	019	2-J20
47 77 041	09	019	2-J20
47 77 066	09	019	2-J20
47 77 074	09	019	2-J20
47 77 090	09	019	2-J20
47 77 108	09	019	2-J20
47 77 165	04	039	1-J16
47 77 173	04	039	1-J16
47 77 181	04	039	1-J16

Part No Art nr	Gr Gr	Page Sida	Grid Koord
47 77 199	04	039	1-J16
47 77 206	04	039	1-J16
47 77 322	04	023	1-I24
47 77 371	04	039	1-J16
47 77 405	04	039	1-J16
47 77 413	04	039	1-J16
47 77 421	04	039	1-J16
47 77 439	04	039	1-J16
47 77 447	04	039	1-J16
47 77 454	04	039	1-J16
47 77 462	04	039	1-J16
47 77 470	04	039	1-J16
47 77 488	04	039	1-J16
47 77 496	04	039	1-J16
47 77 504	04	039	1-J16
47 77 512	04	039	1-J16
47 77 520	04	039	1-J16
47 77 538	04	039	1-J16
47 77 546	04	039	1-J16
47 77 553	04	039	1-J16
47 77 561	04	039	1-J16
47 77 579	04	039	1-J16
47 77 587	04	039	1-J16
47 77 595	04	039	1-J16
47 77 603	04	039	1-J16
47 77 611	04	039	1-J16
47 77 629	04	039	1-J16
47 77 637	04	039	1-J16
47 77 645	04	039	1-J16
47 77 652	04	039	1-J16
47 77 660	04	039	1-J16
47 77 678	04	039	1-J16
47 77 686	04	039	1-J16
47 77 694	04	039	1-J16
47 77 702	04	039	1-J16
47 77 710	04	039	1-J16
47 77 728	04	039	1-J16
47 77 736	04	039	1-J16
47 77 751	04	039	1-J16
47 77 892	04	031	1-J08
47 77 959	04	029	1-J06
47 77 967	04	029	1-J06
47 78 072	05	019	1-K20
47 78 221	05	019	1-K20
47 78 262	05	005	1-K06
47 78 262	05	021	1-K22
47 78 494	05	007	1-K08
47 79 500	05	009	1-K10
47 79 526	05	009	1-K10
47 82 207	02	037	1-D14
47 82 215	02	037	1-D14
47 85 176	08A	061	2-D14
47 85 226	03A	021	1-F22
47 85 242	09	009	2-J10
47 85 259	09	009	2-J10
47 85 267	09	009	2-J10
47 85 275	03A	031	1-G08
47 85 283	03A	027	1-G04
47 85 309	08A	061	2-D14
47 87 602	03A	015	1-F16

MASTER INDEX

0	General	1-A02
2	Engine	1-C02
3A	Electrical systems, instruments	1-F02
4	Transmission	1-I02
5	Brakes	1-K02
6	Front assembly, Steering	1-L02
7	Suspension, Wheels	2-A02
8A	Body, external	2-B02
8B	Body, internal	2-F02
8C	Body, heating and ventilation	2-H02
8D	Tool, Labels	2-I02
9	Accessories	2-J02
10	Numerical register	3-A02

3 -A09 *Numerical register* *Nummerregister*

Part No Art nr	Gr Gr	Page Sida	Grid Koord
47 87 610	03A	015	1-F16
47 87 628	03A	015	1-F16
47 87 636	03A	015	1-F16
47 87 644	03A	015	1-F16
47 87 727	03A	015	1-F16
47 87 776	03A	015	1-F16
47 87 784	03A	015	1-F16
47 87 792	03A	015	1-F16
47 89 111	08B	007	2-F08
47 89 129	08B	007	2-F08
47 90 689	03A	023	1-F24
47 90 697	03A	023	1-F24
47 90 705	03A	023	1-F24
47 92 388	08B	013	2-F14
47 92 446	03A	023	1-F24
47 92 768	08B	021	2-F22
47 94 483	08B	011	2-F12
47 94 491	08B	011	2-F12
47 94 541	08B	013	2-F14
47 94 558	08B	013	2-F14
47 98 906	08B	029	2-G06
47 98 906	08B	033	2-G10
48 00 017	08B	029	2-G06
48 00 017	08B	033	2-G10
48 00 025	08B	039	2-G16
48 00 041	08B	029	2-G06
48 00 041	08B	035	2-G12
48 00 058	08B	029	2-G06
48 00 058	08B	035	2-G12
48 00 439	08B	035	2-G12
48 00 447	08B	029	2-G06
48 01 247	08B	039	2-G16
48 01 254	08B	039	2-G16
48 01 262	06	007	1-L08
48 01 270	06	007	1-L08
48 01 296	08B	035	2-G12
48 01 411	08B	039	2-G16
48 02 229	08B	029	2-G06
48 02 229	08B	033	2-G10
48 02 369	08B	015	2-F16
48 02 377	08B	015	2-F16
48 02 385	08B	015	2-F16
48 02 393	08B	015	2-F16
48 02 401	08B	017	2-F18
48 02 419	08B	017	2-F18
48 02 427	08B	015	2-F16
48 02 435	08B	015	2-F16
48 02 443	08B	017	2-F18
48 02 450	08B	017	2-F18
48 02 468	08B	015	2-F16
48 02 476	08B	015	2-F16
48 02 484	08B	015	2-F16
48 02 492	08B	015	2-F16
48 02 500	08B	015	2-F16
48 02 518	08B	015	2-F16
48 02 526	08B	017	2-F18
48 02 534	08B	017	2-F18
48 02 542	08B	015	2-F16
48 02 559	08B	015	2-F16
48 02 567	08B	017	2-F18

Part No Art nr	Gr Gr	Page Sida	Grid Koord
48 02 575	08B	017	2-F18
48 02 583	08B	015	2-F16
48 02 591	08B	015	2-F16
48 02 666	08B	015	2-F16
48 02 666	09	033	2-K10
48 02 674	08B	015	2-F16
48 02 674	09	033	2-K10
48 02 682	08B	017	2-F18
48 02 682	09	033	2-K10
48 02 690	08B	015	2-F16
48 02 690	09	033	2-K10
48 02 708	08B	017	2-F18
48 02 708	09	033	2-K10
48 02 716	08B	015	2-F16
48 02 716	09	033	2-K10
48 02 773	08B	017	2-F18
48 02 781	08B	015	2-F16
48 02 922	08B	033	2-G10
48 02 930	08B	015	2-F16
48 02 948	08B	015	2-F16
48 02 955	08B	017	2-F18
48 02 963	08B	015	2-F16
48 02 971	08B	017	2-F18
48 02 989	08B	015	2-F16
48 03 235	08B	017	2-F18
48 03 243	08B	015	2-F16
48 04 076	08B	039	2-G16
48 04 530	09	033	2-K10
48 04 548	09	033	2-K10
48 05 008	03A	033	1-G10
48 05 073	09	039	2-K16
48 05 099	09	039	2-K16
48 05 115	09	039	2-K16
48 05 131	09	039	2-K16
48 06 287	03A	055	1-H08
48 06 428	03A	047	1-G24
48 06 659	03A	045	1-G22
48 06 717	03A	061	1-H14
48 07 004	09	039	2-K16
48 07 012	09	039	2-K16
48 07 905	03A	061	1-H14
48 07 939	02	039	1-D16
48 07 939	03A	057	1-H10
48 08 093	09	015	2-J16
48 08 119	09	015	2-J16
48 08 184	03A	061	1-H14
48 08 564	03A	049	1-H02
48 08 572	03A	049	1-H02
48 08 705	03A	047	1-G24
48 08 812	08A	041	2-C18
48 09 067	03A	049	1-H02
48 09 166	03A	037	1-G14
48 09 166	09	011	2-J12
48 12 541	03A	047	1-G24
48 13 820	09	007	2-J08
48 14 349	03A	063	1-H16
48 15 890	08B	009	2-F10
48 16 120	05	017	1-K18
48 16 138	05	017	1-K18
48 16 237	09	051	2-L04

Part No Art nr	Gr Gr	Page Sida	Grid Koord
48 17 326	08B	027	2-G04
48 17 334	08B	027	2-G04
48 17 342	08B	027	2-G04
48 17 359	08B	027	2-G04
48 17 938	08B	011	2-F12
48 17 946	08B	011	2-F12
48 18 175	08B	005	2-F06
48 18 183	08B	005	2-F06
48 18 191	08B	005	2-F06
48 19 306	08B	021	2-F22
48 19 306	09	035	2-K12
48 19 314	08B	021	2-F22
48 19 314	09	035	2-K12
48 21 658	09	031	2-K08
48 21 807	08A	039	2-C16
48 21 815	08A	039	2-C16
48 22 417	08B	041	2-G18
48 22 417	09	051	2-L04
48 22 458	08B	025	2-G02
48 22 466	08B	025	2-G02
48 22 532	08B	009	2-F10
48 22 540	08B	009	2-F10
48 22 557	08B	009	2-F10
48 22 565	08B	009	2-F10
48 23 506	09	029	2-K06
48 23 514	09	029	2-K06
48 23 522	09	029	2-K06
48 23 563	08B	025	2-G02
48 23 563	09	031	2-K08
48 23 571	08B	025	2-G02
48 23 571	09	031	2-K08
48 23 589	08B	025	2-G02
48 23 589	09	031	2-K08
48 23 597	08B	025	2-G02
48 23 597	09	031	2-K08
48 23 613	09	035	2-K12
48 23 662	09	035	2-K12
48 23 670	09	035	2-K12
48 24 322	08B	025	2-G02
48 24 330	08B	025	2-G02
48 24 348	08A	037	2-C14
48 24 355	08A	037	2-C14
48 24 959	08B	041	2-G18
48 25 006	08A	015	2-B16
48 25 014	08A	007	2-B08
48 25 022	08A	007	2-B08
48 25 030	08A	007	2-B08
48 25 048	08A	007	2-B08
48 25 055	08A	007	2-B08
48 25 071	08A	005	2-B06
48 25 089	08A	005	2-B06
48 25 097	08A	005	2-B06
48 25 105	08A	005	2-B06
48 25 113	08A	005	2-B06
48 25 121	08A	005	2-B06
48 25 139	08A	005	2-B06
48 25 147	08A	005	2-B06
48 25 170	08A	015	2-B16
48 25 188	08A	015	2-B16
48 25 196	08A	007	2-B08

Part No Art nr	Gr Gr	Page Sida	Grid Koord
48 25 634	08A	023	2-B24
48 25 808	08A	023	2-B24
48 26 004	08A	009	2-B10
48 26 012	08A	029	2-C06
48 26 020	08A	029	2-C06
48 26 038	08A	009	2-B10
48 26 046	08A	009	2-B10
48 26 053	08A	019	2-B20
48 26 061	08A	009	2-B10
48 26 079	08A	015	2-B16
48 26 087	08A	015	2-B16
48 26 095	08A	027	2-C04
48 26 103	08A	015	2-B16
48 26 137	08A	027	2-C04
48 26 145	08A	027	2-C04
48 26 152	08A	013	2-B14
48 26 160	08A	013	2-B14
48 26 178	08A	013	2-B14
48 26 186	08A	013	2-B14
48 26 194	08A	007	2-B08
48 26 202	08A	007	2-B08
48 26 210	08A	015	2-B16
48 26 228	08A	015	2-B16
48 26 244	08A	013	2-B14
48 26 269	08A	013	2-B14
48 26 277	08A	013	2-B14
48 26 285	08A	013	2-B14
48 26 293	08A	013	2-B14
48 26 301	08A	013	2-B14
48 26 319	08A	013	2-B14
48 26 327	08A	013	2-B14
48 26 368	08A	013	2-B14
48 26 376	08A	013	2-B14
48 26 996	08A	005	2-B06
48 27 028	09	037	2-K14
48 27 036	09	037	2-K14
48 27 895	08A	005	2-B06
48 27 903	08A	005	2-B06
48 27 911	08A	005	2-B06
48 27 929	08A	005	2-B06
48 28 471	08A	015	2-B16
48 28 489	08A	015	2-B16
48 28 497	08A	007	2-B08
48 28 505	08A	007	2-B08
48 28 513	08A	013	2-B14
48 28 521	08A	013	2-B14
48 29 032	08A	015	2-B16
48 29 040	08A	015	2-B16
48 30 071	08A	027	2-C04
48 30 113	03A	023	1-F24
48 31 236	03A	021	1-F22
48 31 244	03A	021	1-F22
48 31 251	03A	021	1-F22
48 31 301	03A	021	1-F22
48 32 085	03A	019	1-F20
48 32 085	09	009	2-J10
48 32 093	09	009	2-J10
48 32 176	03A	021	1-F22
48 32 192	03A	021	1-F22
48 32 267	03A	021	1-F22

3 -A10 *Numerical register* *Nummerregister*

Part No Art nr	Gr Gr	Page Sida	Grid Koord
48 32 291	08C	007	2-H08
48 32 309	03A	027	1-G04
48 32 317	03A	027	1-G04
48 32 325	03A	027	1-G04
48 32 333	03A	027	1-G04
48 32 341	03A	027	1-G04
48 32 358	03A	027	1-G04
48 32 366	03A	027	1-G04
48 32 374	03A	027	1-G04
48 32 382	03A	027	1-G04
48 32 390	03A	027	1-G04
48 32 408	03A	027	1-G04
48 32 416	03A	027	1-G04
48 32 424	03A	027	1-G04
48 32 432	03A	015	1-F16
48 32 440	03A	015	1-F16
48 32 457	03A	015	1-F16
48 32 465	03A	015	1-F16
48 32 754	03A	031	1-G08
48 32 812	03A	031	1-G08
48 32 895	03A	031	1-G08
48 32 911	03A	031	1-G08
48 32 929	03A	031	1-G08
48 32 945	03A	029	1-G06
48 32 952	03A	029	1-G06
48 32 986	03A	031	1-G08
48 33 117	08A	035	2-C12
48 33 125	08A	035	2-C12
48 33 133	08A	033	2-C10
48 33 141	08A	033	2-C10
48 33 190	09	009	2-J10
48 33 281	08A	061	2-D14
48 33 372	08A	047	2-C24
48 33 638	08A	047	2-C24
48 35 005	05	013	1-K14
48 35 187	05	015	1-K16
48 35 195	05	015	1-K16
48 35 708	06	005	1-L06
48 35 716	06	005	1-L06
48 35 740	06	005	1-L06
48 35 757	06	013	1-L14
48 35 765	06	013	1-L14
48 35 781	05	013	1-K14
48 35 799	05	013	1-K14
48 35 922	09	025	2-K02
48 35 930	07	009	2-A10
48 35 930	09	025	2-K02
48 35 948	09	025	2-K02
48 36 052	07	009	2-A10
48 36 177	02	065	1-E18
48 36 185	02	065	1-E18
48 36 201	07	009	2-A10
48 36 219	07	009	2-A10
48 36 342	05	017	1-K18
48 36 359	05	017	1-K18
48 36 367	05	017	1-K18
48 36 375	05	017	1-K18
48 36 383	05	017	1-K18
48 36 441	05	017	1-K18
48 36 441	05	019	1-K20

Part No Art nr	Gr Gr	Page Sida	Grid Koord
48 36 466	06	015	1-L16
48 36 540	06	011	1-L12
48 36 540	06	015	1-L16
48 36 557	06	011	1-L12
48 36 557	06	015	1-L16
48 36 565	06	011	1-L12
48 36 565	06	015	1-L16
48 36 656	05	011	1-K12
48 36 664	05	011	1-K12
48 36 672	05	011	1-K12
48 36 680	05	011	1-K12
48 36 698	05	011	1-K12
48 36 706	05	011	1-K12
48 36 730	05	011	1-K12
48 36 748	05	011	1-K12
48 36 755	05	011	1-K12
48 36 763	05	011	1-K12
48 36 771	05	011	1-K12
48 36 789	05	011	1-K12
48 36 805	05	013	1-K14
48 36 847	05	011	1-K12
48 36 961	05	007	1-K08
48 36 961	05	021	1-K22
48 36 979	05	021	1-K22
48 36 987	05	007	1-K08
48 36 987	05	021	1-K22
48 37 019	05	019	1-K20
48 37 027	05	019	1-K20
48 37 035	07	009	2-A10
48 37 043	07	009	2-A10
48 37 159	09	029	2-J24
48 37 415	07	005	2-A06
48 38 447	06	013	1-L14
48 38 850	07	007	2-A08
48 38 967	05	005	1-K06
48 38 975	05	005	1-K06
48 39 023	08D	011	2-I12
48 39 239	07	007	2-A08
48 39 239	09	023	2-J24
48 39 320	05	005	1-K06
48 39 320	05	019	1-K20
48 39 338	05	007	1-K08
48 39 338	05	019	1-K20
48 39 353	05	017	1-K18
48 39 387	05	011	1-K12
48 39 395	05	011	1-K12
48 39 403	05	011	1-K12
48 39 544	07	007	2-A08
48 39 635	06	013	1-L14
48 39 643	06	013	1-L14
48 39 650	06	013	1-L14
48 39 882	05	019	1-K20
48 39 890	05	019	1-K20
48 39 924	05	005	1-K06
48 39 924	05	019	1-K20
48 41 888	08B	029	2-G06
48 41 896	08B	029	2-G06
48 41 920	08B	029	2-G06
48 41 938	08B	029	2-G06
48 41 961	08B	033	2-G10

Part No Art nr	Gr Gr	Page Sida	Grid Koord
48 41 979	08B	033	2-G10
48 41 987	08B	033	2-G10
48 41 995	08B	033	2-G10
48 42 001	08B	033	2-G10
48 42 019	08B	033	2-G10
48 42 027	08B	033	2-G10
48 42 035	08B	033	2-G10
48 42 332	08B	039	2-G16
48 42 332	09	033	2-K10
48 42 787	08B	045	2-G22
48 42 795	08B	045	2-G22
48 42 803	08B	045	2-G22
48 42 811	08B	045	2-G22
48 42 829	08B	047	2-G24
48 42 837	08B	047	2-G24
48 42 845	08B	047	2-G24
48 45 806	09	047	2-K24
48 45 814	09	047	2-K24
48 45 822	08B	029	2-G06
48 45 889	08B	029	2-G06
48 45 889	08B	033	2-G10
48 45 897	08B	029	2-G06
48 45 897	08B	033	2-G10
48 45 954	08B	031	2-G08
48 45 962	08B	031	2-G08
48 45 970	08B	031	2-G08
48 45 988	08B	031	2-G08
48 45 996	08B	031	2-G08
48 46 002	08B	031	2-G08
48 46 010	08B	031	2-G08
48 46 028	08B	031	2-G08
48 46 036	08B	035	2-G12
48 46 044	08B	035	2-G12
48 46 051	08B	035	2-G12
48 46 069	08B	035	2-G12
48 46 077	08B	035	2-G12
48 46 085	08B	035	2-G12
48 46 093	08B	035	2-G12
48 46 101	08B	035	2-G12
48 46 119	08B	031	2-G08
48 46 127	08B	031	2-G08
48 46 135	08B	031	2-G08
48 46 143	08B	031	2-G08
48 46 150	08B	037	2-G14
48 46 168	08B	037	2-G14
48 46 176	08B	037	2-G14
48 46 184	08B	037	2-G14
48 46 192	08B	031	2-G08
48 46 200	08B	031	2-G08
48 46 218	08B	031	2-G08
48 46 226	08B	031	2-G08
48 46 234	08B	037	2-G14
48 46 242	08B	037	2-G14
48 46 259	08B	037	2-G14
48 46 267	08B	037	2-G14
48 46 275	08B	037	2-G14
48 46 283	08B	037	2-G14
48 46 713	06	009	1-L10
48 46 721	06	009	1-L10
48 46 747	06	009	1-L10

Part No Art nr	Gr Gr	Page Sida	Grid Koord
48 46 754	06	009	1-L10
48 46 788	06	009	1-L10
48 46 804	06	009	1-L10
48 46 812	08B	035	2-G12
48 46 820	08B	029	2-G06
48 46 820	08B	033	2-G10
48 46 838	08B	029	2-G06
48 46 846	08B	029	2-G06
48 46 853	08B	035	2-G12
48 46 861	08B	035	2-G12
48 47 067	08B	035	2-G12
48 47 075	08B	035	2-G12
48 47 349	06	009	1-L10
48 47 372	06	009	1-L10
48 47 562	06	007	1-L08
48 48 313	08B	009	2-F10
48 48 321	08B	009	2-F10
48 48 438	06	009	1-L10
48 48 446	06	009	1-L10
48 48 693	08B	007	2-F08
48 48 701	08B	007	2-F08
48 50 871	08A	043	2-C20
48 50 889	08A	043	2-C20
48 51 044	08A	041	2-C18
48 51 051	08A	033	2-C10
48 51 069	08A	033	2-C10
48 51 077	08A	035	2-C12
48 51 085	08A	035	2-C12
48 51 093	08A	019	2-B20
48 51 366	08A	041	2-C18
48 51 374	08A	041	2-C18
48 51 481	08A	019	2-B20
48 51 572	08A	033	2-C10
48 51 580	08A	035	2-C12
48 51 598	08A	035	2-C12
48 51 713	08A	041	2-C18
48 51 721	08A	041	2-C18
48 51 929	08A	041	2-C18
48 52 067	08A	019	2-B20
48 52 174	08A	059	2-D12
48 52 315	08A	059	2-D12
48 52 323	08A	059	2-D12
48 52 398	08A	057	2-D10
48 52 877	08A	025	2-C02
48 52 885	08A	025	2-C02
48 53 115	08A	037	2-C14
48 53 123	08A	037	2-C14
48 53 313	08A	025	2-C02
48 53 321	09	027	2-K04
48 53 479	08A	039	2-C16
48 53 644	08A	037	2-C14
48 53 818	08A	057	2-D10
48 53 909	09	027	2-K04
48 54 139	08A	045	2-C22
48 54 147	08A	045	2-C22
48 54 196	08A	043	2-C20
48 54 204	08A	043	2-C20
48 54 212	08A	041	2-C18
48 54 212	08A	043	2-C20
48 54 378	08A	037	2-C14

MASTER INDEX

0	General	1-A02
2	Engine	1-C02
3A	Electrical systems, instruments	1-F02
4	Transmission	1-I02
5	Brakes	1-K02
6	Front assembly, Steering	1-L02
7	Suspension, Wheels	2-A02
8A	Body, external	2-B02
8B	Body, internal	2-F02
8C	Body, heating and ventilation	2-H02
8D	Tool, Labels	2-I02
9	Accessories	2-J02
10	Numerical register	3-A02

3-A11 *Numerical register* *Nummerregister*

Part No Art nr	Gr Sida	Page	Grid Koord
48 54 378	08A	039	2-C16
48 54 451	08A	039	2-C16
48 54 634	08A	025	2-C02
48 54 923	08A	025	2-C02
48 54 972	08A	025	2-C02
48 54 980	08A	025	2-C02
48 55 011	08A	025	2-C02
48 55 029	08A	025	2-C02
48 55 094	08A	041	2-C18
48 55 128	08A	025	2-C02
48 55 151	08A	037	2-C14
48 55 169	08A	037	2-C14
48 55 177	08A	037	2-C14
48 55 185	08A	037	2-C14
48 55 193	08A	039	2-C16
48 55 201	08A	039	2-C16
48 55 243	08A	041	2-C18
48 55 250	08A	025	2-C02
48 55 334	08A	045	2-C22
48 55 656	08A	035	2-C12
48 55 664	08A	041	2-C18
48 56 324	08A	035	2-C12
48 56 399	08A	033	2-C10
48 56 449	08A	039	2-C16
48 56 787	08A	033	2-C10
48 56 795	08A	033	2-C10
48 57 223	08A	053	2-D06
48 57 959	08A	025	2-C02
48 60 672	09	049	2-L02
48 60 748	09	049	2-L02
48 60 755	09	049	2-L02
48 60 771	09	049	2-L02
48 60 870	09	049	2-L02
48 60 888	09	049	2-L02
48 60 920	09	049	2-L02
48 61 001	09	049	2-L02
48 61 019	09	049	2-L02
48 61 027	09	049	2-L02
48 61 035	09	049	2-L02
48 61 043	09	049	2-L02
48 61 050	09	049	2-L02
48 61 068	09	049	2-L02
48 61 134	09	049	2-L02
48 61 142	09	049	2-L02
48 61 159	09	049	2-L02
48 61 167	09	049	2-L02
48 67 255	08A	063	2-D16
48 67 263	08A	063	2-D16
48 [illegible] 317	08B	041	2-G18
[illegible] 360	08C	017	2-H18
48 68 485	08C	005	2-H06
48 68 493	08C	005	2-H06
48 68 501	08C	005	2-H06
48 68 725	08C	005	2-H06
48 69 020	08C	009	2-H10
48 69 020	09	045	2-K22
48 69 087	08C	009	2-H10
48 69 129	08C	009	2-H10
48 69 129	09	045	2-K22
48 69 186	08C	017	2-H18

Part No Art nr	Gr Sida	Page	Grid Koord
48 69 194	08C	017	2-H18
48 69 285	08C	009	2-H10
48 70 309	03A	039	1-G16
48 70 309	09	013	2-J14
48 70 317	03A	039	1-G16
48 70 317	09	013	2-J14
48 70 333	03A	045	1-G22
48 70 366	09	011	2-J12
48 73 246	03A	045	1-G22
48 73 246	09	011	2-J12
48 73 345	03A	067	1-H20
48 73 352	03A	067	1-H20
48 73 402	09	011	2-J12
48 73 527	03A	045	1-G22
48 73 527	03A	069	1-H22
48 73 535	03A	045	1-G22
48 73 535	03A	069	1-H22
48 73 543	03A	045	1-G22
48 73 543	03A	069	1-H22
48 73 576	03A	067	1-H20
48 73 584	03A	067	1-H20
48 73 642	03A	067	1-H20
48 76 108	09	005	2-J06
48 76 116	09	005	2-J06
48 80 217	08D	005	2-I06
48 80 456	08B	023	2-F24
48 81 785	08A	051	2-D04
48 81 793	08A	051	2-D04
48 82 718	08B	023	2-F24
48 83 161	08B	013	2-F14
48 83 757	08B	019	2-F20
48 83 757	08B	021	2-F22
48 84 524	08C	013	2-H14
48 84 532	08C	013	2-H14
48 85 646	08B	041	2-G18
48 87 246	08B	029	2-G06
48 87 246	08B	033	2-G10
48 88 061	08B	011	2-F12
48 88 103	08B	011	2-F12
48 88 533	08B	043	2-G20
48 88 541	08B	043	2-G20
[illegible] 88 558	08B	043	2-G20
48 88 566	08B	043	2-G20
48 95 017	02	027	1-D04
48 95 108	02	051	1-E04
48 95 116	02	051	1-E04
48 95 132	02	015	1-C16
48 95 140	02	029	1-D06
48 95 942	09	043	2-K20
48 96 312	02	015	1-C16
48 96 569	02	027	1-D04
48 96 577	02	027	1-D04
48 97 732	02	051	1-E04
48 97 757	02	051	1-E04
48 98 060	02	005	1-C06
48 98 078	02	005	1-C06
48 98 086	02	005	1-C06
48 98 342	02	049	1-E02
48 98 656	02	005	1-C06
48 98 672	02	005	1-C06

Part No Art nr	Gr Sida	Page	Grid Koord
48 98 698	02	005	1-C06
48 98 714	02	069	1-E22
48 98 755	02	015	1-C16
48 99 449	02	051	1-E04
48 99 548	02	015	1-C16
48 99 696	02	005	1-C06
48 99 704	02	005	1-C06
48 99 787	02	005	1-C06
48 99 795	02	051	1-E04
48 99 852	02	005	1-C06
48 99 894	09	043	2-K20
48 99 902	09	043	2-K20
48 99 951	09	043	2-K20
49 05 014	07	005	2-A06
49 05 022	07	009	2-A10
49 05 485	05	011	1-K12
49 05 493	05	019	1-K20
49 05 659	06	015	1-L16
49 05 667	06	015	1-L16
49 05 675	06	011	1-L12
49 05 675	06	015	1-L16
49 05 683	06	011	1-L12
49 05 683	06	015	1-L16
49 05 865	06	011	1-L12
49 05 865	06	015	1-L16
49 05 899	07	009	2-A10
49 05 949	06	015	1-L16
49 05 964	07	009	2-A10
49 05 980	05	017	1-K18
49 06 038	07	009	2-A10
49 06 046	07	009	2-A10
49 06 111	07	009	2-A10
49 06 178	05	013	1-K14
49 06 186	05	013	1-K14
49 06 202	05	013	1-K14
49 06 319	07	009	2-A10
49 06 384	07	009	2-A10
49 06 525	07	009	2-A10
49 06 749	07	009	2-A10
49 07 556	07	007	2-A08
49 07 630	05	013	1-K14
49 07 648	05	013	1-K14
49 07 747	08D	005	2-I06
49 07 754	08D	005	2-I06
49 07 861	06	011	1-L12
49 07 879	06	011	1-L12
49 08 059	08A	005	2-B06
49 08 067	07	007	2-A08
49 08 075	05	011	1-K12
49 08 091	08D	005	2-I06
49 08 109	06	005	1-L06
49 08 166	07	009	2-A10
49 08 174	07	009	2-A10
49 08 265	05	011	1-K12
49 08 356	05	017	1-K18
49 08 489	06	013	1-L14
49 08 497	05	007	1-K08
49 08 497	05	021	1-K22
49 08 505	05	021	1-K22
49 08 513	05	021	1-K22

Part No Art nr	Gr Sida	Page	Grid Koord
49 08 588	06	013	1-L14
49 09 024	08A	005	2-B06
49 09 032	06	011	1-L12
49 09 164	07	007	2-A08
49 09 164	09	023	2-J24
49 09 180	06	013	1-L14
49 09 800	06	011	1-L12
49 09 966	05	013	1-K14
49 10 949	08A	031	2-C08
49 11 541	08A	047	2-C24
49 12 457	03A	019	1-F20
49 12 457	09	009	2-J10
49 12 465	03A	019	1-F20
49 12 465	09	009	2-J10
49 12 473	03A	019	1-F20
49 12 473	09	009	2-J10
49 12 481	03A	019	1-F20
49 12 481	09	009	2-J10
49 12 507	03A	019	1-F20
49 12 507	09	009	2-J10
49 12 515	03A	017	1-F18
49 12 523	03A	017	1-F18
49 12 564	03A	017	1-F18
49 13 661	08A	063	2-D16
49 13 679	08A	063	2-D16
49 13 745	03A	031	1-G08
49 14 016	08A	047	2-C24
49 14 115	08A	047	2-C24
49 14 164	08A	031	2-C08
49 14 982	03A	027	1-G04
49 15 377	08A	047	2-C24
49 18 041	08A	033	2-C10
49 18 041	08A	035	2-C12
49 19 031	08A	061	2-D14
49 19 049	08A	061	2-D14
49 19 056	03A	019	1-F20
49 19 163	09	027	2-K04
49 20 922	08A	023	2-B24
49 21 037	08A	023	2-B24
49 21 045	08A	023	2-B24
49 26 408	04	007	1-I08
49 26 416	04	007	1-I08
49 26 499	04	023	1-I24
49 26 507	04	023	1-I24
49 26 580	04	029	1-J06
49 27 430	08A	011	2-B12
49 27 547	03A	035	1-G12
49 27 554	03A	035	1-G12
49 27 711	03A	055	1-H08
49 27 893	03A	005	1-F06
49 27 950	08A	033	2-C10
49 27 968	08A	033	2-C10
49 29 287	03A	035	1-G12
49 29 303	03A	035	1-G12
49 29 311	03A	033	1-G10
49 29 311	03A	035	1-G12
49 29 345	03A	063	1-H16
49 30 699	08B	035	2-G12
49 30 707	08B	035	2-G12
49 30 731	08B	029	2-G06

3-A12 *Numerical register* *Nummerregister*

Part No Art nr	Gr Sida	Page	Grid Koord
49 30 749	08B	029	2-G06
49 30 756	08B	029	2-G06
49 30 764	08B	029	2-G06
49 30 772	08B	029	2-G06
49 30 780	08B	029	2-G06
49 30 798	08B	033	2-G10
49 30 806	08B	033	2-G10
49 30 814	08B	033	2-G10
49 30 822	08B	033	2-G10
49 31 093	08C	013	2-H14
49 31 101	08B	031	2-G08
49 31 101	08B	037	2-G14
49 31 275	08A	051	2-D04
49 31 317	08B	025	2-G02
49 31 325	08B	025	2-G02
49 32 406	08B	015	2-F16
49 32 414	08B	015	2-F16
49 32 422	08B	017	2-F18
49 32 430	08B	015	2-F16
49 32 448	08B	017	2-F18
49 32 455	08B	015	2-F16
49 32 463	08B	017	2-F18
49 32 471	08B	015	2-F16
49 32 489	08B	015	2-F16
49 32 497	08B	015	2-F16
49 32 505	08B	017	2-F18
49 32 513	08B	015	2-F16
49 32 521	08B	017	2-F18
49 32 539	08B	015	2-F16
49 32 836	08B	031	2-G08
49 32 851	08B	031	2-G08
49 32 893	08B	031	2-G08
49 32 901	08B	031	2-G08
49 33 057	08B	033	2-G10
49 33 503	08B	039	2-G16
49 35 318	03A	023	1-F24
49 35 318	09	011	2-J12
49 35 433	08B	029	2-G06
49 35 441	08B	033	2-G10
49 35 516	08B	033	2-G10
49 35 524	08B	033	2-G10
49 35 532	08B	033	2-G10
49 35 540	08B	033	2-G10
49 35 847	08B	035	2-G12
49 35 888	09	031	2-K08
49 35 896	09	031	2-K08
49 35 987	09	031	2-K08
49 35 995	09	031	2-K08
49 36 084	08B	041	2-G18
49 36 209	09	031	2-K08
49 36 217	09	031	2-K08
49 36 233	09	031	2-K08
49 36 241	09	031	2-K08
49 36 415	08B	035	2-G12
49 36 431	08B	031	2-G08
49 36 431	08B	035	2-G12
49 36 456	08B	035	2-G12
49 37 975	08B	029	2-G06
49 37 975	08B	033	2-G10
49 37 983	08B	029	2-G06

Part No Art nr	Gr Sida	Page	Grid Koord
49 37 983	08B	033	2-G10
49 40 011	02	029	1-D06
49 40 029	02	029	1-D06
49 40 045	08A	033	2-C10
49 40 045	08A	035	2-C12
49 40 102	08B	005	2-F06
49 40 177	07	009	2-A10
49 40 219	06	005	1-L06
49 40 219	07	005	2-A06
49 40 243	08A	037	2-C14
49 40 250	08A	057	2-D10
49 40 342	03A	027	1-G04
49 40 367	02	015	1-C16
49 40 433	09	043	2-K20
49 40 557	08A	053	2-D06
49 40 565	08B	045	2-G22
49 40 607	08A	005	2-B06
49 40 755	08A	025	2-C02
49 41 761	03A	009	1-F10
49 42 017	09	015	2-J16
49 42 058	09	015	2-J16
49 43 593	03A	055	1-H08
49 43 601	03A	055	1-H08
49 43 619	03A	055	1-H08
49 43 627	03A	055	1-H08
49 43 809	03A	005	1-F06
49 43 841	03A	053	1-H06
49 45 762	03A	055	1-H08
49 45 788	03A	005	1-F06
49 45 937	09	017	2-J18
49 46 067	03A	063	1-H16
49 46 455	09	013	2-J14
49 46 521	03A	047	1-G24
49 46 539	03A	047	1-G24
49 46 562	03A	051	1-H04
49 46 570	03A	051	1-H04
49 46 588	03A	051	1-H04
49 46 596	03A	051	1-H04
49 46 604	03A	051	1-H04
49 46 612	03A	051	1-H04
49 46 620	03A	053	1-H06
49 46 638	03A	053	1-H06
49 46 844	03A	005	1-F06
49 47 065	09	007	2-J08
49 47 180	03A	051	1-H04
49 47 198	03A	051	1-H04
49 47 206	03A	051	1-H04
49 47 214	03A	051	1-H04
49 47 222	03A	051	1-H04
49 47 230	03A	051	1-H04
49 47 420	03A	051	1-H04
49 47 438	03A	051	1-H04
49 47 446	03A	051	1-H04
49 47 453	03A	051	1-H04
49 54 954	02	015	1-C16
49 55 175	08A	019	2-B20
49 55 183	08A	019	2-B20
49 56 322	08A	047	2-C24
49 57 072	08A	063	2-D16
49 61 041	09	041	2-K18

Part No Art nr	Gr Sida	Page	Grid Koord
49 61 959	02	015	1-C16
50 00 526	08D	005	2-I06
50 01 045	03A	023	1-F24
50 01 045	09	011	2-J12
50 01 953	08B	037	2-G14
50 01 961	08B	037	2-G14
50 01 979	08B	037	2-G14
50 01 987	08B	037	2-G14
50 01 995	08B	031	2-G08
50 02 001	08B	031	2-G08
50 02 019	08B	031	2-G08
50 02 027	08B	031	2-G08
50 02 530	08B	031	2-G08
50 02 548	08B	031	2-G08
50 02 571	08B	033	2-G10
50 05 723	08B	029	2-G06
50 05 723	08B	033	2-G10
50 05 814	08B	035	2-G12
50 05 822	08B	035	2-G12
50 05 830	08B	035	2-G12
50 05 848	08B	035	2-G12
50 05 855	08B	035	2-G12
50 05 863	08B	035	2-G12
50 06 689	08B	035	2-G12
50 06 697	08B	035	2-G12
50 07 190	08B	035	2-G12
50 07 208	08B	035	2-G12
50 07 216	08B	035	2-G12
50 07 224	08B	035	2-G12
50 07 646	08B	043	2-G20
50 07 653	08B	043	2-G20
50 07 703	08B	043	2-G20
50 07 711	08B	043	2-G20
50 08 610	08B	011	2-F12
50 09 287	09	047	2-K24
50 09 295	09	047	2-K24
50 10 053	06	015	1-L16
50 10 079	06	015	1-L16
50 10 087	06	015	1-L16
50 10 103	08D	009	2-I10
50 10 111	08D	009	2-I10
50 10 129	08D	011	2-I12
50 10 228	06	015	1-L16
50 10 244	06	007	1-L08
50 10 244	06	015	1-L16
50 10 467	06	009	1-L10
50 10 699	08B	009	2-F10
50 11 465	08D	011	2-I12
50 11 689	08B	009	2-F10
50 11 705	06	007	1-L08
50 11 754	06	007	1-L08
50 11 762	06	007	1-L08
50 11 788	08C	013	2-H14
50 11 796	08C	013	2-H14
50 11 804	08C	013	2-H14
50 11 812	08C	013	2-H14
50 12 182	06	007	1-L08
50 12 265	06	007	1-L08
50 12 273	06	007	1-L08
50 12 331	08B	043	2-G20

Part No Art nr	Gr Sida	Page	Grid Koord
50 12 729	08B	005	2-F06
50 12 737	08B	005	2-F06
50 12 745	06	009	1-L10
50 12 752	06	009	1-L10
50 13 453	08B	005	2-F06
50 25 275	08B	033	2-G10
50 25 309	08B	035	2-G12
50 25 317	08B	035	2-G12
50 26 877	08B	035	2-G12
50 26 901	08B	029	2-G06
50 26 919	08B	029	2-G06
50 26 950	09	051	2-L04
50 27 396	08B	017	2-F18
50 27 487	08B	011	2-F12
50 27 495	08B	011	2-F12
50 27 628	08B	011	2-F12
50 27 636	08B	011	2-F12
50 28 055	08B	013	2-F14
50 28 113	08B	017	2-F18
50 28 634	08B	011	2-F12
50 30 176	08B	013	2-F14
50 30 234	08B	011	2-F12
50 30 242	08B	011	2-F12
50 31 174	08B	025	2-G02
50 31 182	08B	025	2-G02
50 31 257	08B	039	2-G16
50 31 265	08B	039	2-G16
50 31 422	08B	011	2-F12
50 31 455	08B	011	2-F12
50 31 463	08B	011	2-F12
50 32 727	08B	011	2-F12
50 32 784	08B	029	2-G06
50 32 784	08B	033	2-G10
50 32 792	08B	029	2-G06
50 32 792	08B	033	2-G10
50 37 883	08B	035	2-G12
50 32 891	08B	035	2-G12
50 32 909	08B	033	2-G10
50 32 917	08B	035	2-G12
50 37 601	03A	067	1-H20
50 55 108	07	005	2-A06
50 56 015	05	021	1-K22
50 56 106	02	005	1-C06
50 56 114	08A	005	2-B06
50 56 536	05	011	1-K12
50 56 676	05	005	1-K06
69 15 706	08A	047	2-C24
69 30 572	08A	033	2-C10
69 30 572	08A	035	2-C12
69 30 572	08A	041	2-C18
69 73 671	08A	025	2-C02
69 73 762	08A	025	2-C02
69 73 804	08A	025	2-C02
69 74 000	08A	041	2-C18
69 92 028	03A	053	2-D06
69 92 028	08A	055	2-D08
69 92 325	08A	063	2-D16
70 61 328	04	011	1-I12
71 08 491	02	051	1-E04
71 08 491	08B	029	2-G06

MASTER INDEX

0	General	1-A02
2	Engine	1-C02
3A	Electrical systems, instruments	1-F02
4	Transmission	1-I02
5	Brakes	1-K02
6	Front assembly, Steering	1-L02
7	Suspension, Wheels	2-A02
8A	Body, external	2-B02
8B	Body, internal	2-F02
8C	Body, heating and ventilation	2-H02
8D	Tool, Labels	2-I02
9	Accessories	2-J02
10	Numerical register	3-A02

3-A13 *Numerical register* *Nummerregister*

Part No Art nr	Gr Gr	Page Sida	Grid Koord
71 08 491	08B	033	2-G10
71 54 719	03A	021	1-F22
71 56 409	03A	059	1-H12
71 57 308	03A	023	1-F24
71 63 074	08A	041	2-C18
73 11 764	03A	007	1-F08
73 11 764	03A	009	1-F10
73 98 407	02	055	1-E08
73 98 423	09	027	2-K04
73 98 886	08A	041	2-C18
73 98 977	02	055	1-E08
73 99 181	03A	031	1-G08
73 99 181	08A	031	2-C08
73 99 454	08A	037	2-C14
73 99 454	08A	039	2-C16
73 99 454	08A	041	2-C18
73 99 454	08B	019	2-F20
73 99 454	08B	021	2-F22
73 99 652	05	011	1-K12
73 99 694	09	027	2-K04
74 80 643	02	021	1-C22
74 80 684	02	021	1-C22
74 95 105	02	019	1-C20
74 95 658	08C	009	2-H10
74 95 658	09	045	2-K22
74 95 690	08C	009	2-H10
74 95 690	09	045	2-K22
74 95 872	09	045	2-K22
74 95 898	09	045	2-K22
74 95 906	09	045	2-K22
74 95 914	09	045	2-K22
74 95 997	08C	009	2-H10
74 95 997	09	045	2-K22
74 97 001	08A	067	2-D20
74 97 019	08A	065	2-D18
74 97 019	08A	069	2-D22
74 97 225	08A	069	2-D22
74 97 514	08A	069	2-D22
74 97 522	08A	069	2-D22
74 97 530	08A	069	2-D22
74 97 753	08A	069	2-D22
74 97 761	08A	069	2-D22
74 97 779	08A	069	2-D22
74 97 787	08A	069	2-D22
74 97 795	08A	069	2-D22
75 02 263	02	067	1-E20
75 04 178	02	007	1-C08
75 04 566	02	007	1-C08
75 08 690	02	017	1-C18
75 12 593	02	027	1-D04
75 15 190	02	025	1-D02
75 19 432	02	049	1-E02
75 41 907	04	025	1-J02
75 59 875	04	023	1-I24
75 77 729	04	023	1-I24
75 83 628	02	025	1-D02
75 85 052	02	011	1-C12
75 85 086	02	017	1-C18
75 85 847	02	007	1-C08
75 88 320	02	007	1-C08
75 88 783	02	021	1-C22
75 91 936	02	055	1-E08
75 93 072	02	007	1-C08
75 93 080	04	029	1-J06
75 93 221	03A	057	1-H10
78 20 228	08A	065	2-D18
78 20 244	08A	065	2-D18
79 15 556	09	041	2-K18
79 16 521	08A	007	2-B08
79 18 584	04	021	1-I22
79 22 214	03A	021	1-F22
79 22 347	08B	029	2-G06
79 22 347	08B	031	2-G08
79 22 347	08B	033	2-G10
79 22 347	08B	037	2-G14
79 22 354	03A	023	1-F24
79 22 354	03A	039	1-G16
79 22 354	08B	029	2-G06
79 22 354	09	013	2-J14
79 22 370	03A	023	1-F24
79 22 370	08B	041	2-G18
79 22 388	09	041	2-K18
79 22 404	09	041	2-K18
79 22 438	08A	061	2-D14
79 22 495	09	039	2-K16
79 49 548	02	011	1-C12
79 49 548	02	019	1-C20
79 50 066	02	011	1-C12
79 51 783	03A	021	1-F22
79 56 154	04	027	1-J04
79 61 329	09	041	2-K18
79 61 329	09	043	2-K20
79 67 573	04	017	1-I18
79 67 912	04	023	1-I24
79 67 938	04	005	1-I06
79 67 953	02	049	1-E02
79 67 979	02	005	1-C06
79 67 979	08A	007	2-B08
79 67 979	08A	063	2-D16
79 67 995	08A	025	2-C02
79 67 995	08A	061	2-D14
79 67 995	08B	007	2-F08
79 67 995	09	043	2-K20
79 68 001	08B	005	2-F06
79 69 314	09	027	2-K04
79 69 355	02	067	1-E20
79 69 405	03A	005	1-F06
79 69 462	09	043	2-K20
79 70 056	06	013	1-L14
79 70 064	09	043	2-K20
79 70 072	06	013	1-L14
79 70 072	09	043	2-K20
79 70 130	02	055	1-E08
79 70 148	02	027	1-D04
79 70 148	02	055	1-E08
79 70 155	02	027	1-D04
79 70 155	02	055	1-E08
79 70 163	02	027	1-D04
79 70 304	03A	039	1-G16
79 70 304	06	007	1-L08
79 70 304	08B	005	2-F06
79 70 536	03A	061	1-H14
79 70 536	03A	065	1-H18
79 70 536	09	041	2-K18
79 70 536	09	043	2-K20
79 70 601	09	043	2-K20
79 71 112	03A	011	1-F12
79 71 294	02	023	1-C24
79 71 823	08A	041	2-C18
79 71 864	03A	057	1-H10
79 71 864	09	013	2-J14
79 71 864	09	039	2-K16
79 71 872	02	035	1-D12
79 71 872	08B	029	2-G06
79 71 872	08B	035	2-G12
79 71 880	02	047	1-D24
79 71 880	02	051	1-E04
79 71 880	03A	057	1-H10
79 71 880	04	041	1-J18
79 71 880	06	007	1-L08
79 71 880	06	013	1-L14
79 71 880	06	015	1-L16
79 71 880	09	009	2-J10
79 71 880	09	015	2-J16
79 71 880	09	039	2-K16
79 71 880	09	041	2-K18
79 71 880	09	043	2-K20
79 71 898	03A	057	1-H10
79 71 922	02	065	1-E18
79 71 922	03A	005	1-F06
79 71 922	04	007	1-I08
79 71 922	05	009	1-K10
79 71 922	05	011	1-K12
79 72 490	04	023	1-I24
79 72 490	08B	043	2-G20
79 72 516	02	055	1-E08
79 72 516	03A	045	1-G22
79 72 516	06	007	1-L08
79 72 516	08A	025	2-C02
79 72 516	08A	037	2-C14
79 72 516	08A	039	2-C16
79 72 516	08A	057	2-D10
79 72 516	09	011	2-J12
79 72 573	08B	023	2-F24
79 72 573	09	041	2-K18
79 72 607	03A	059	1-H12
79 72 607	03A	063	1-H16
79 72 607	06	007	1-L08
79 72 623	06	009	1-L10
79 72 714	04	011	1-I12
79 72 714	04	015	1-I16
79 72 714	04	017	1-I18
79 72 797	04	027	1-J04
79 72 938	02	069	1-E22
79 72 938	08A	063	2-D16
79 72 938	08B	031	2-G08
79 72 938	08B	037	2-G14
79 72 946	08A	061	2-D14
79 72 953	09	027	2-K04
79 73 365	09	039	2-K16
79 73 522	09	043	2-K20
79 73 738	04	029	1-J06
79 73 779	04	015	1-I16
79 73 894	08B	019	2-F20
79 73 894	08B	021	2-F22
79 73 894	09	041	2-K18
79 74 009	05	011	1-K12
79 74 074	04	029	1-J06
79 74 298	03A	039	1-G16
79 74 298	06	007	1-L08
79 74 546	02	031	1-D08
79 74 611	03A	065	1-H18
79 74 629	03A	065	1-H18
79 74 637	03A	065	1-H18
79 74 645	03A	065	1-H18
79 74 645	09	009	2-J10
79 74 645	09	045	2-K22
79 74 652	03A	065	1-H18
79 74 660	03A	065	1-H18
79 74 660	09	039	2-K16
79 74 660	09	045	2-K22
79 74 678	03A	065	1-H18
79 75 071	09	015	2-J16
79 75 212	06	009	1-L10
79 75 329	08B	041	2-G18
79 75 337	08B	041	2-G18
79 75 501	04	025	1-J02
79 75 576	06	007	1-L08
79 76 897	07	005	2-A06
79 76 905	02	005	1-C06
79 76 947	02	053	1-E06
79 76 947	02	057	1-E10
79 76 947	08C	017	2-H18
79 76 947	09	045	2-K22
79 77 002	03A	059	1-H12
79 77 002	03A	063	1-H16
79 77 002	03A	067	1-H20
79 77 002	08A	061	2-D14
79 77 002	08A	063	2-D16
79 77 002	08B	005	2-F06
79 77 002	08B	007	2-F08
79 77 002	08B	009	2-F10
79 77 002	08B	041	2-G18
79 77 002	08C	013	2-H14
79 77 002	09	017	2-J18
79 77 465	08A	061	2-D14
79 77 465	09	015	2-J16
79 77 523	08A	049	2-D02
79 77 523	08A	061	2-D14
79 77 580	06	013	1-L14
79 77 630	08A	041	2-C18
79 77 689	09	045	2-K22
79 77 697	04	007	1-I08
79 77 911	03A	005	1-F06
79 77 911	03A	007	1-F08
79 77 911	03A	009	1-F10
79 77 911	03A	029	1-G06
79 77 911	03A	059	1-H12
79 77 929	02	037	1-D14

3-A14 *Numerical register* *Nummerregister*

Part No Art nr	Gr Gr	Page Sida	Grid Koord
79 77 929	02	057	1-E10
79 77 929	02	067	1-E20
79 77 929	03A	005	1-F06
79 77 929	03A	021	1-F22
79 77 929	03A	039	1-G16
79 77 929	03A	041	1-G18
79 77 929	03A	045	1-G22
79 77 929	03A	047	1-G24
79 77 929	03A	059	1-H12
79 77 929	03A	063	1-H16
79 77 929	05	009	1-K10
79 77 929	05	011	1-K12
79 77 929	05	017	1-K18
79 77 929	06	007	1-L08
79 77 929	06	009	1-L10
79 77 929	06	013	1-L14
79 77 929	08A	019	2-B20
79 77 929	08A	033	2-C10
79 77 929	08A	035	2-C12
79 77 929	08A	041	2-C18
79 77 929	08A	043	2-C20
79 77 929	08A	049	2-D02
79 77 929	08A	057	2-D10
79 77 929	08A	061	2-D14
79 77 929	08C	017	2-H18
79 77 929	09	009	2-J10
79 77 929	09	011	2-J12
79 77 929	09	013	2-J14
79 77 929	09	027	2-K04
79 77 929	09	043	2-K20
79 77 929	09	045	2-K22
79 77 952	02	057	1-E10
79 77 952	03A	005	1-F06
79 77 952	03A	009	1-F10
79 77 952	03A	047	1-G24
79 77 952	05	009	1-K10
79 77 952	06	009	1-L10
79 77 952	08A	005	2-B06
79 77 952	08A	025	2-C02
79 77 952	08B	039	2-G16
79 77 960	08B	023	2-F24
79 78 091	02	017	1-C18
79 78 091	02	025	1-D02
79 78 091	02	035	1-D12
79 78 091	02	055	1-E08
79 78 091	02	061	1-E14
79 78 091	02	069	1-E22
79 78 091	03A	039	1-G16
79 78 091	04	035	1-J12
79 78 091	08A	041	2-C18
79 78 091	09	013	2-J14
79 78 109	02	019	1-C20
79 78 109	02	023	1-C24
79 78 109	02	035	1-D12
79 78 109	02	061	1-E14
79 78 109	02	067	1-E20
79 78 109	03A	019	1-F20
79 78 109	04	025	1-J02
79 78 109	08A	061	2-D14
79 78 109	09	009	2-J10
79 78 117	02	043	1-D20
79 78 117	02	067	1-E20
79 78 117	03A	039	1-G16
79 78 117	05	013	1-K14
79 78 117	06	013	1-L14
79 78 117	09	027	2-K04
79 78 133	05	013	1-K14
79 78 133	09	043	2-K20
79 78 141	02	017	1-C18
79 78 141	02	019	1-C20
79 78 182	02	007	1-C08
79 78 182	02	041	1-D18
79 78 182	02	067	1-E20
79 78 182	03A	025	1-G02
79 78 182	09	043	2-K20
79 78 190	02	007	1-C08
79 78 190	02	025	1-D02
79 78 190	02	055	1-E08
79 78 190	02	063	1-E16
79 78 190	04	007	1-I08
79 78 190	04	025	1-J02
79 78 190	05	011	1-K12
79 78 190	05	015	1-K16
79 78 190	06	009	1-L10
79 78 190	06	013	1-L14
79 78 190	08A	013	2-B14
79 78 190	08A	033	2-C10
79 78 190	08A	035	2-C12
79 78 190	08A	041	2-C18
79 78 190	09	009	2-J10
79 78 216	02	007	1-C08
79 78 216	02	023	1-C24
79 78 216	02	061	1-E14
79 78 224	04	029	1-J06
79 78 224	06	013	1-L14
79 78 224	08C	017	2-H18
79 78 224	09	045	2-K22
79 78 232	05	011	1-K12
79 78 240	02	007	1-C08
79 78 257	02	007	1-C08
79 78 265	08B	041	2-G18
79 78 281	08A	013	2-B14
79 78 323	02	005	1-C06
79 78 323	02	015	1-C16
79 78 323	09	045	2-K22
79 78 372	03A	059	1-H12
79 78 380	02	035	1-D12
79 78 422	08A	051	2-D04
79 78 430	03A	021	1-F22
79 78 430	04	027	1-J04
79 78 430	04	041	1-J18
79 78 430	08A	025	2-C02
79 78 430	08A	037	2-C14
79 78 430	08A	039	2-C16
79 78 430	08B	019	2-F20
79 78 430	08B	021	2-F22
79 78 455	09	039	2-G16
79 78 455	09	013	2-J14
79 78 455	09	033	2-K10
79 78 638	09	027	2-K04
79 78 638	09	043	2-K20
79 78 646	08A	031	2-C08
79 78 653	08A	061	2-D14
79 78 653	08B	045	2-G22
79 78 661	02	027	1-D04
79 78 661	02	029	1-D06
79 78 661	02	031	1-D08
79 78 661	08A	061	2-D14
79 78 679	03A	031	1-G08
79 78 679	08C	011	2-H12
79 79 537	07	005	2-A06
79 79 552	06	005	1-L06
79 79 552	06	011	1-L12
79 79 610	08A	013	2-B14
79 79 610	08A	057	2-D10
79 82 119	06	009	1-L10
79 82 176	04	027	1-J04
79 82 176	04	039	1-J16
79 82 325	08A	019	2-B20
79 82 325	08A	041	2-C18
79 82 325	08C	017	2-H18
79 82 325	09	045	2-K22
79 82 333	06	007	1-L08
79 82 481	06	013	1-L14
79 82 515	02	041	1-D18
79 82 564	02	005	1-C06
79 82 572	02	005	1-C06
79 82 655	03A	015	1-F16
79 82 [illegible]47	08A	023	2-B24
79 82 [illegible]47	08A	023	2-C02
79 82 [illegible]70	08A	023	2-B24
79 82 796	08A	023	2-B24
79 82 929	08A	063	2-D16
79 82 929	08B	041	2-G18
79 82 960	06	013	1-L14
79 82 960	08C	015	2-H16
79 82 960	09	045	2-K22
79 82 986	08B	039	2-G16
79 83 000	02	015	1-C16
79 83 000	02	059	1-E12
79 83 000	08A	049	2-D02
79 83 042	03A	065	1-H18
79 83 067	03A	065	1-H18
79 84 297	02	005	1-C06
79 84 297	03A	011	1-F12
79 84 297	04	011	1-I12
79 84 297	04	033	1-J10
79 84 305	03A	005	1-F06
79 84 305	03A	015	1-F16
79 84 305	08A	025	2-C02
79 84 735	02	019	1-C20
79 84 768	09	043	2-K20
79 84 776	03A	011	1-F12
79 84 891	02	019	1-C20
79 84 933	06	005	1-L06
79 85 120	02	011	1-C12
79 85 146	02	045	1-D22
79 85 161	02	045	1-D22
79 85 377	03A	029	1-G06
79 85 377	03A	059	1-H12
79 85 377	03A	063	1-H16
79 85 377	08A	013	2-B14
79 85 377	08B	025	2-G02
79 85 682	08C	011	2-H12
79 85 690	03A	015	1-F16
79 85 773	02	005	1-C06
79 85 773	02	029	1-D06
79 85 781	02	055	1-E08
79 85 807	02	005	1-C06
79 85 856	06	005	1-L06
79 85 898	06	009	1-L10
79 85 948	08A	025	2-C02
79 85 955	03A	037	1-G14
79 86 581	07	005	2-A06
79 87 100	02	005	1-C06
79 87 209	02	005	1-C06
79 94 882	08A	071	2-D24
79 98 115	05	021	1-K22
80 29 936	09	041	2-K18
80 29 985	04	025	1-J02
80 30 058	06	007	1-L08
80 30 058	09	021	2-J22
80 47 144	04	021	1-I22
80 55 998	05	007	1-K08
80 59 230	03A	039	1-G16
80 59 230	04	027	1-J04
80 59 230	04	041	1-J18
80 59 230	09	013	2-J14
80 59 461	09	039	2-K16
80 59 461	09	041	2-K18
80 59 537	05	005	1-K06
80 59 552	03A	013	1-F14
80 59 578	04	041	1-J18
80 59 586	02	019	1-C20
80 59 580	02	061	1-E14
80 59 776	08B	039	2-G16
80 59 792	04	015	1-I16
80 59 792	04	017	1-I18
80 59 792	04	019	1-I20
80 59 792	04	021	1-I22
80 73 249	06	009	1-L10
80 73 512	04	039	1-J16
[illegible] 74 098	09	041	2-K18
80 74 106	04	011	1-I12
80 74 270	09	041	2-K18
80 74 288	04	033	1-J10
80 82 968	02	019	1-C20
80 82 984	02	015	1-C16
80 83 966	04	023	1-I24
80 97 783	06	009	1-L10
80 98 378	03A	007	1-F08
80 98 378	03A	009	1-F10
81 09 571	02	017	1-C18
81 17 657	04	015	1-I16
81 23 143	02	007	1-C08
81 23 168	02	019	1-C20
81 23 192	02	019	1-C20
81 23 259	02	011	1-C12
81 23 473	04	039	1-J16

MASTER INDEX

0	General	1-A02
2	Engine	1-C02
3A	Electrical systems, instruments	1-F02
4	Transmission	1-I02
5	Brakes	1-K02
6	Front assembly, Steering	1-L02
7	Suspension, Wheels	2-A02
8A	Body, external	2-B02
8B	Body, internal	2-F02
8C	Body, heating and ventilation	2-H02
8D	Tool, Labels	2-I02
9	Accessories	2-J02
10	Numerical register	3-A02

3 -A15 *Numerical register* *Nummerregister*

Part No Art nr	Gr Gr	Page Sida	Grid Koord	Part No Art nr	Gr Gr	Page Sida	Grid Koord	Part No Art nr	Gr Gr	Page Sida	Grid Koord	Part No Art nr	Gr Gr	Page Sida	Grid Koord
81 23 739	02	041	1-D18	84 87 779	08A	071	2-D24	87 29 378	04	019	1-I20	87 40 797	04	019	1-I20
81 23 747	02	049	1-E02	84 90 708	08B	013	2-F14	87 29 964	04	017	1-I18	87 41 043	04	015	1-I16
81 24 125	02	041	1-D18	84 99 204	08B	045	2-G22	87 30 111	04	015	1-I16	87 41 241	04	017	1-I18
81 24 133	02	067	1-E20	85 00 613	03A	023	1-F24	87 30 319	04	019	1-I20	87 41 381	04	015	1-I16
81 24 141	02	067	1-E20	85 00 613	09	039	2-K16	87 30 665	04	011	1-I12	87 41 506	04	017	1-I18
81 24 158	02	025	1-D02	85 01 264	03A	023	1-F24	87 31 077	04	015	1-I16	87 41 878	04	011	1-I12
81 30 064	03A	005	1-F06	85 22 310	09	009	2-J10	87 31 143	04	011	1-I12	87 42 199	04	017	1-I18
81 30 064	08A	007	2-B08	85 30 917	03A	031	1-G08	87 31 150	04	017	1-I18	87 42 421	04	017	1-I18
81 51 243	02	005	1-C06	85 32 756	03A	021	1-F22	87 31 192	04	017	1-I18	87 42 439	04	017	1-I18
81 51 342	02	005	1-C06	85 33 176	03A	065	1-H18	87 31 333	04	017	1-I18	87 42 447	04	021	1-I22
81 51 474	07	009	2-A10	85 33 176	08B	035	2-G12	87 31 366	04	017	1-I18	87 42 876	04	021	1-I22
81 51 474	09	025	2-K02	85 33 176	09	045	2-K22	87 31 374	04	017	1-I18	87 43 205	04	019	1-I20
82 04 760	03A	061	1-H14	85 36 419	02	051	1-E04	87 31 382	04	017	1-I18	87 43 221	04	013	1-I14
82 28 702	08A	007	2-B08	85 36 419	08A	011	2-B12	87 31 788	04	021	1-I22	87 43 791	04	017	1-I18
82 67 098	02	055	1-E08	85 49 172	03A	029	1-G06	87 32 117	04	021	1-I22	87 43 809	04	017	1-I18
82 67 098	08C	017	2-H18	85 49 420	03A	031	1-G08	87 34 071	04	017	1-I18	87 43 858	04	011	1-I12
82 67 098	09	045	2-K22	85 52 663	03A	057	1-H10	87 34 097	04	011	1-I12	87 44 047	04	011	1-I12
82 72 635	08A	033	2-C10	85 59 221	08B	009	2-F10	87 34 105	04	011	1-I12	87 44 088	04	021	1-I22
82 72 635	08A	035	2-C12	85 59 221	09	035	2-K12	87 34 436	04	019	1-I20	87 44 153	04	017	1-I18
82 78 558	05	009	1-K10	85 74 469	08B	009	2-F10	87 34 451	04	019	1-I20	87 44 237	04	017	1-I18
82 84 499	08A	069	2-D22	85 74 477	08B	009	2-F10	87 34 477	04	019	1-I20	87 44 252	04	017	1-I18
82 85 231	08A	065	2-D18	86 67 719	09	037	2-K14	87 34 568	04	021	1-I22	87 44 427	04	013	1-I14
82 85 231	08A	067	2-D20	86 75 993	09	049	2-L02	87 34 618	04	021	1-I22	87 44 856	04	021	1-I22
82 85 231	08A	069	2-D22	86 77 908	09	041	2-K18	87 34 626	04	021	1-I22	87 44 997	04	017	1-I18
82 85 231	08A	071	2-D24	86 77 916	09	041	2-K18	87 34 634	04	021	1-I22	87 45 606	04	017	1-I18
82 85 249	08A	071	2-D24	86 78 906	09	041	2-K18	87 34 642	04	021	1-I22	87 45 614	04	021	1-I22
82 85 256	08A	071	2-D24	86 78 914	09	041	2-K18	87 34 659	04	017	1-I18	87 45 630	04	015	1-I16
82 85 264	08A	071	2-D24	86 78 922	09	041	2-K18	87 34 741	04	015	1-I16	87 46 190	04	015	1-I16
82 85 371	08A	065	2-D18	86 79 243	09	039	2-K16	87 34 808	04	015	1-I16	87 46 216	04	015	1-I16
82 85 389	08A	065	2-D18	86 82 411	09	023	2-J24	87 34 816	04	011	1-I12	87 46 372	04	017	1-I18
82 85 397	08A	067	2-D20	86 82 437	09	023	2-J24	87 34 824	04	011	1-I12	87 46 463	04	011	1-I12
82 85 488	08A	065	2-D18	86 84 573	09	017	2-J18	87 34 881	04	011	1-I12	87 46 489	04	005	1-I06
82 85 488	08A	067	2-D20	86 84 847	08B	019	2-F20	87 35 276	04	015	1-I16	87 46 489	04	043	1-J20
82 85 488	08A	069	2-D22	86 84 847	08B	021	2-F22	87 35 359	04	019	1-I20	87 46 638	04	015	1-I16
82 85 496	08A	065	2-D18	86 85 216	09	017	2-J18	87 35 441	04	017	1-I18	87 46 687	04	019	1-I20
82 85 496	08A	067	2-D20	86 85 232	09	017	2-J18	87 35 490	04	017	1-I18	87 46 711	04	005	1-I06
82 85 496	08A	069	2-D22	86 88 129	09	011	2-J12	87 35 516	04	019	1-I20	87 46 711	04	043	1-J20
83 26 712	02	067	1-E20	86 88 137	09	011	2-J12	87 35 599	04	015	1-I16	87 47 016	04	017	1-I18
83 46 470	02	011	1-C12	86 88 244	09	051	2-L04	87 35 656	04	015	1-I16	87 47 172	04	017	1-I18
83 48 047	02	011	1-C12	86 88 251	09	051	2-L04	87 35 680	04	019	1-I20	87 47 180	04	019	1-I20
83 48 609	02	023	1-C24	87 01 658	04	011	1-I12	87 35 847	04	019	1-I20	87 47 255	04	021	1-I22
83 52 692	02	063	1-E16	87 16 821	04	017	1-I18	87 35 862	04	019	1-I20	87 47 354	04	011	1-I12
83 52 692	02	071	1-E24	87 16 839	04	017	1-I18	87 35 896	04	019	1-I20	87 47 909	04	017	1-I18
83 66 791	02	051	1-E04	87 17 027	04	015	1-I16	87 35 920	04	019	1-I20	87 47 925	04	017	1-I18
84 41 503	08B	029	2-G06	87 19 163	04	017	1-I18	87 36 399	04	017	1-I18	87 48 261	04	019	1-I20
84 41 503	09	041	2-K18	87 19 189	04	017	1-I18	87 36 597	04	017	1-I18	87 48 295	04	009	1-I10
84 86 292	08A	067	2-D20	87 19 650	04	015	1-I16	87 37 074	04	017	1-I18	87 48 667	04	013	1-I14
84 86 292	08A	069	2-D22	87 19 684	04	015	1-I16	87 37 447	04	017	1-I18	87 48 956	04	017	1-I18
84 86 300	08A	067	2-D20	87 21 565	04	015	1-I16	87 38 155	04	013	1-I14	87 49 012	04	021	1-I22
84 86 300	08A	069	2-D22	87 21 573	04	015	1-I16	87 38 411	04	011	1-I12	87 49 020	04	019	1-I20
84 87 22[illegible]	08A	069	2-D22	87 21 615	04	015	1-I16	87 38 411	04	035	1-J12	87 81 452	04	017	1-I18
84 87 266	08A	065	2-D18	87 21 623	04	015	1-I16	87 39 781	04	015	1-I16	87 81 478	04	019	1-I20
84 87 274	08A	065	2-D18	87 21 946	04	017	1-I18	87 40 169	04	017	1-I18	87 81 486	04	019	1-I20
84 87 282	08A	067	2-D20	87 21 953	04	017	1-I18	87 40 185	04	017	1-I18	87 81 684	04	017	1-I18
84 87 621	08A	065	2-D18	87 23 330	04	017	1-I18	87 40 649	04	015	1-I16	87 81 734	04	019	1-I20
84 87 621	08A	067	2-D20	87 23 397	04	015	1-I16	87 40 656	04	015	1-I16	87 81 882	04	017	1-I18
84 87 621	08A	069	2-D22	87 23 967	04	011	1-I12	87 40 672	04	017	1-I18	87 81 890	04	005	1-I06
84 87 712	08A	067	2-D20	87 25 327	04	019	1-I20	87 40 680	04	017	1-I18	87 81 890	04	043	1-J20
84 87 753	08A	065	2-D18	87 26 754	04	015	1-I16	87 40 714	04	015	1-I16	87 81 908	04	021	1-I22
84 87 761	08A	065	2-D18	87 27 869	04	015	1-I16	87 40 789	04	019	1-I20	87 81 916	04	017	1-I18

3 -A16 *Numerical register* *Nummerregister*

Part No Art nr	Gr Gr	Page Sida	Grid Koord	Part No Art nr	Gr Gr	Page Sida	Grid Koord	Part No Art nr	Gr Gr	Page Sida	Grid Koord	Part No Art nr	Gr Gr	Page Sida	Grid Koord
87 81 981	04	017	1-I18	91 33 034	02	009	1-C10	91 72 123	02	067	1-E20	91 79 268	02	023	1-C24
88 22 025	02	063	1-E16	91 33 034	02	071	1-E24	91 72 149	02	067	1-E20	91 79 284	02	023	1-C24
88 22 025	02	071	1-E24	91 35 211	02	007	1-C08	91 72 164	02	067	1-E20	91 79 326	02	067	1-E20
88 22 041	02	009	1-C10	91 35 542	05	011	1-K12	91 72 214	02	021	1-C22	91 79 342	02	067	1-E20
88 22 041	02	071	1-E24	91 36 243	02	035	1-D12	91 72 230	02	011	1-C12	91 79 516	02	067	1-E20
88 22 694	02	033	1-D10	91 36 243	02	055	1-E08	91 72 255	02	019	1-C20	91 79 615	02	067	1-E20
88 22 702	02	019	1-C20	91 36 243	05	011	1-K12	91 72 271	02	023	1-C24	91 80 514	02	067	1-E20
88 22 702	02	071	1-E24	91 36 524	02	067	1-E20	91 72 305	02	023	1-C24	91 80 522	02	067	1-E20
88 22 710	02	061	1-E14	91 36 532	02	017	1-C18	91 72 362	02	035	1-D12	91 80 597	02	067	1-E20
88 59 324	02	017	1-C18	91 37 993	02	023	1-C24	91 72 487	02	067	1-E20	91 80 688	02	013	1-C14
88 59 514	02	021	1-C22	91 37 993	02	041	1-D18	91 73 162	02	023	1-C24	91 80 696	02	013	1-C14
89 08 576	05	007	1-K08	91 38 009	02	023	1-C24	91 73 204	02	021	1-C22	91 80 704	02	013	1-C14
89 34 259	06	011	1-L12	91 38 108	02	023	1-C24	91 73 220	02	021	1-C22	91 80 712	02	013	1-C14
89 34 259	08A	007	2-B08	91 38 264	02	019	1-C20	91 73 238	02	021	1-C22	91 80 845	02	041	1-D18
89 54 315	06	007	1-L08	91 39 130	02	019	1-C20	91 73 246	02	021	1-C22	91 81 355	03A	013	1-F14
89 54 315	09	021	2-J22	91 39 403	02	021	1-C22	91 73 261	02	021	1-C22	91 81 397	02	009	1-C10
89 55 478	05	019	1-K20	91 39 460	02	021	1-C22	91 73 287	02	021	1-C22	91 81 462	02	013	1-C14
89 60 221	08A	045	2-C22	91 40 658	02	019	1-C20	91 73 295	02	021	1-C22	91 81 488	02	013	1-C14
89 65 097	05	013	1-K14	91 43 967	02	067	1-E20	91 73 352	02	063	1-E16	91 81 496	02	013	1-C14
89 65 360	04	029	1-J06	91 44 445	02	023	1-C24	91 73 378	02	067	1-E20	91 81 504	02	013	1-C14
89 69 107	05	019	1-K20	91 44 767	02	061	1-E14	91 73 485	02	043	1-D20	91 81 736	02	023	1-C24
89 69 651	05	005	1-K06	91 44 833	02	019	1-C20	91 73 501	02	019	1-C20	91 81 744	02	023	1-C24
89 72 309	06	011	1-L12	91 44 874	02	019	1-C20	91 73 576	02	019	1-C20	91 81 769	02	007	1-C08
89 72 309	06	015	1-L16	91 45 350	02	017	1-C18	91 73 584	02	071	1-E24	91 81 827	02	021	1-C22
89 93 941	05	017	1-K18	91 45 369	02	019	1-C20	91 73 592	02	071	1-E24	91 81 934	02	023	1-C24
89 93 941	05	019	1-K20	91 45 376	02	017	1-C18	91 73 741	02	061	1-E14	91 81 991	02	019	1-C20
89 94 154	04	029	1-J06	91 45 384	02	019	1-C20	91 73 782	02	021	1-C22	91 82 155	02	025	1-D02
89 94 154	04	043	1-J20	91 45 392	02	019	1-C20	91 73 808	02	021	1-C22	91 82 163	02	025	1-D02
89 94 162	04	043	1-J20	91 45 418	02	021	1-C22	91 74 194	02	011	1-C12	91 82 171	02	025	1-D02
89 94 170	04	029	1-J06	91 45 459	02	021	1-C22	91 74 202	02	011	1-C12	91 82 197	02	019	1-C20
90 85 267	08A	025	2-C02	91 45 517	03A	013	1-F14	91 74 285	02	011	1-C12	91 82 445	02	067	1-E20
90 87 040	08A	061	2-D14	91 45 756	02	009	1-C10	91 74 442	02	041	1-D18	91 82 486	02	025	1-D02
91 06 139	03A	059	1-H12	91 45 764	02	025	1-D02	91 74 889	02	025	1-D02	91 82 544	02	061	1-E14
91 06 139	05	013	1-K14	91 45 764	03A	013	1-F14	91 74 913	02	007	1-C08	91 83 823	02	007	1-C08
91 07 541	02	017	1-C18	91 46 523	02	061	1-E14	91 75 035	02	035	1-D12	91 83 831	02	021	1-C22
91 07 582	02	067	1-E20	91 46 598	02	061	1-E14	91 75 266	02	023	1-C24	91 83 849	02	025	1-D02
91 09 182	02	023	1-C24	91 46 606	02	061	1-E14	91 75 290	02	067	1-E20	91 85 091	02	027	1-D04
91 12 541	03A	013	1-F14	91 47 026	02	023	1-C24	91 75 464	02	035	1-D12	91 85 307	02	007	1-C08
91 13 937	02	067	1-E20	91 66 398	02	045	1-D22	91 75 662	02	023	1-C24	91 85 588	02	019	1-C20
91 15 197	02	017	1-C18	91 66 497	02	045	1-D22	91 75 696	02	023	1-C24	91 85 620	02	007	1-C08
91 15 205	02	017	1-C18	91 66 687	02	071	1-E24	91 76 223	02	045	1-D22	91 85 844	02	041	1-D18
91 16 443	02	019	1-C20	91 67 024	03A	013	1-F14	91 76 660	02	023	1-C24	91 85 851	02	007	1-C08
91 16 674	02	067	1-E20	91 67 677	02	011	1-C12	91 76 900	02	045	1-D22	91 86 107	02	041	1-D18
91 16 864	02	017	1-C18	91 67 784	02	019	1-C20	91 76 918	02	043	1-D20	91 86 404	02	041	1-D18
91 20 684	09	041	2-K18	91 69 277	02	045	1-D22	91 76 934	02	021	1-C22	91 86 412	02	041	1-D18
91 23 399	09	009	2-J10	91 69 566	02	007	1-C08	91 76 942	02	021	1-C22	91 86 644	02	007	1-C08
91 24 132	03A	023	1-F24	91 70 796	02	007	1-C08	91 76 959	02	021	1-C22	91 86 933	02	007	1-C08
91 24 140	03A	023	1-F24	91 70 812	02	007	1-C08	91 77 031	02	061	1-E14	91 86 941	02	007	1-C08
91 28 687	02	011	1-C12	91 70 861	02	007	1-C08	91 77 122	02	035	1-D12	91 87 758	02	007	1-C08
91 29 719	02	019	1-C20	91 70 887	02	007	1-C08	91 77 171	02	007	1-C08	91 87 790	02	025	1-D02
91 29 727	02	019	1-C20	91 70 895	02	007	1-C08	91 77 213	02	007	1-C08	91 87 816	02	025	1-D02
91 29 800	02	011	1-C12	91 71 422	02	021	1-C22	91 77 221	03A	013	1-F14	91 87 980	03A	013	1-F14
91 30 535	02	019	1-C20	91 71 497	02	007	1-C08	91 77 437	02	035	1-D12	92 40 086	08A	041	2-C18
91 30 600	02	019	1-C20	91 71 497	02	041	1-D18	91 77 973	02	019	1-C20	92 59 524	09	027	2-K04
91 31 145	02	017	1-C18	91 71 935	02	007	1-C08	91 78 302	02	019	1-C20	92 56 552	08A	025	2-C02
91 31 160	02	021	1-C22	91 72 008	02	021	1-C22	91 78 336	02	019	1-C20	92 67 808	08A	023	2-B24
91 32 929	02	023	1-C24	91 72 057	02	025	1-D02	91 78 666	02	067	1-E20	92 89 414	08A	033	2-C10
91 32 937	02	023	1-C24	91 72 065	02	025	1-D02	91 78 849	02	051	1-E04	92 89 414	08A	035	2-C12
91 33 026	02	009	1-C10	91 72 099	02	025	1-D02	91 78 989	02	041	1-D18	92 89 414	08A	051	2-D04
91 33 026	02	071	1-E24	91 72 115	02	025	1-D02	91 79 011	02	055	1-E08	92 92 699	08A	005	2-B06

MASTER INDEX

0	General	1-A02
2	Engine	1-C02
3A	Electrical systems, instruments	1-F02
4	Transmission	1-I02
5	Brakes	1-K02
6	Front assembly, Steering	1-L02
7	Suspension, Wheels	2-A02
8A	Body, external	2-B02
8B	Body, internal	2-F02
8C	Body, heating and ventilation	2-H02
8D	Tool, Labels	2-I02
9	Accessories	2-J02
10	Numerical register	3-A02

Part No Art nr	Gr Gr	Page Sida	Grid Koord
93 06 812	02	045	1-D22
93 21 795	02	011	1-C12
93 21 795	02	019	1-C20
93 21 795	02	023	1-C24
93 21 795	04	011	1-I12
93 48 533	04	025	1-J02
93 57 138	02	045	1-D22
93 57 138	02	067	1-E20
93 61 544	02	023	1-C24
93 78 332	04	029	1-J06
93 81 450	04	029	1-J06
94 26 909	09	017	2-J18
94 59 726	08B	041	2-G18
95 04 556	03A	023	1-F24
95 05 536	03A	067	1-H20
95 05 546	03A	067	1-H20
95 06 080	03A	023	1-F24
95 07 617	03A	031	1-G08
95 12 880	03A	015	1-F16
95 12 880	03A	021	1-F22
95 12 880	03A	023	1-F24
95 21 857	03A	023	1-F24
95 22 061	03A	065	1-H18
95 25 221	06	013	1-L14
95 44 834	08B	013	2-F14
95 50 476	08A	023	2-B24
95 58 149	03A	029	1-G06
95 60 012	09	009	2-J10
95 60 012	09	041	2-K18
95 65 003	08B	035	2-G12
95 65 011	08B	035	2-G12
95 65 417	03A	039	1-G16
95 86 827	08B	045	2-G22
95 93 161	08B	005	2-F06
96 17 846	08B	045	2-G22
96 17 846	08B	047	2-G24
96 17 853	08B	045	2-G22
96 17 853	08B	047	2-G24
96 30 252	08C	005	2-H06
96 53 502	08B	043	2-G20
96 68 153	08B	041	2-G18
96 70 548	08B	023	2-F24
96 71 389	08B	019	2-F20
96 71 389	08B	021	2-F22
96 76 057	08B	023	2-F24
96 98 168	08A	065	2-D18
96 98 176	08A	065	2-D18
96 98 184	08A	067	2-D20
97 46 264	08A	067	2-D20
97 46 314	08A	071	2-D24
97 46 652	08A	071	2-D24
97 46 835	08A	071	2-D24
97 46 850	08A	071	2-D24
97 46 884	08A	071	2-D24
97 46 892	08A	071	2-D24
97 46 900	08A	071	2-D24
97 46 926	08A	071	2-D24
97 46 934	08A	071	2-D24
97 46 959	08A	071	2-D24
97 46 967	08A	071	2-D24
97 46 975	08A	069	2-D22
97 46 975	08A	071	2-D24
97 57 691	08B	013	2-F14
97 60 497	08B	011	2-F12
97 65 520	03A	023	1-F24
97 74 290	08B	041	2-G18
97 85 031	08B	027	2-G04
97 97 200	08B	019	2-F20
97 97 200	08B	021	2-F22

MASTER INDEX

0	General	1-A02
2	Engine	1-C02
3A	Electrical systems, instruments	1-F02
4	Transmission	1-I02
5	Brakes	1-K02
6	Front assembly, Steering	1-L02
7	Suspension, Wheels	2-A02
8A	Body, external	2-B02
8B	Body, internal	2-F02
8C	Body, heating and ventilation	2-H02
8D	Tool, Labels	2-I02
9	Accessories	2-J02
10	Numerical register	3-A02